STAFF REPORT

TO: **PLANNING COMMISSION**

FROM: **TODD A. HODGES, PLANNER**

SUBJECT: **MARKET STREET BUSINESS PARK SUBDIVISION PRELIMINARY AND FINAL PLAN**

PC MEETING DATE: NOVEMBER 7, 2019

BOARD OF TRUSTEES MEETING DATE: NOVEMBER 18, 2019

I. Attachments

1. Application items (additional submittal items not included in this report may be reviewed at Town Hall)
2. Preliminary and Final Plan Maps
3. Referral form and referral responses

II. Project Owners and Representatives:

Owners:
Keene Land Holdings LLC
c/o: Richard I. Robertson and Chris Bailey

Applicant:
Same as above

Project Representative:
Richard I. Robertson
8537 CR 51, Keenesburg, CO 80643
303-961-0031
pri.rickrobertson@gmail.com

III. Location

The site is located north and adjacent to I-76 and west and adjacent to Market Street. See attached aerial map.

III. Project Description

The land use application is for a subdivision preliminary and final plan which is the second and third step in the subdivision land use process to develop the property. This property is annexed and zoned Highway Commercial.

These steps in the subdivision process allows staff, referral agencies, Planning Commission and Board of Trustees the opportunity to review the final layout and design of the proposed development.

This submittal proposes a 4 lot commercial development on a 9.46 acre site. A landscape buffer is proposed within an outlot of the subdivision to be maintained by an owner association. The landscape buffer was a requirement from review of the sketch plan and is further addressed in the conditions of approval.

Please see preliminary and final plan submittal for additional information on the proposed subdivision. Future development on each lot will be required to go through a pre-application meeting and land use process based on the site specific proposal.

VIII. Findings/Conclusions

After review of the Comprehensive Plan, Municipal Code and referral comments, staff finds that:

1. The Comprehensive Plan designates the property as Commercial Highway use and therefore the proposed subdivision is consistent with the comprehensive plan and current zoning of Highway Commercial;
2. Municipal water is proposed for this development and sanitary if proposed to be served through the Town sanitary sewer system.

The adjacent property owners were notified as required for a preliminary and final plan submittal, the site was posted and public notice was placed in the paper concerning the public meetings for this request.

At the time this report was written, there have been no written objections filed with the Town concerning the proposed preliminary and final plan. Referrals were sent to the list attached to this report. Written correspondence was received from the Town Engineer and CDOT. The referral responses are attached to this report and their comments have been addressed in the conditions of approval.

IX. Recommendation

Based upon the findings identified in this report, staff recommends approval of the Market Street Business Park Subdivision preliminary and final plan with the following conditions:

I. Prior to recording the final plat the following items must be addressed:

A. The applicant shall adequately address the Town Engineer referral comments;

B. The applicant shall address any redlines for the drawings and staff comments;

C. The applicant shall submit an on-site and off-site improvements agreement for review by staff and acceptance by the Board of Trustees.

D. The applicant shall adequately address referral comments received by CDOT;

E. The applicant shall submit a landscape and maintenance plan for the landscape buffer located on the western portion of the property for review and approval by staff. The approved landscape elements shall be included in the required on-site improvements agreement for the development.

WESTERN ENGINEERING CONSULTANTS, Inc LLC
127 S Denver Ave. Fort Lupton, CO 80621
2501 Mill Street, Brush, CO 80723
Office: 720-685-9951
Cell. 303-913-7341, Fax 720-294-1330
Email: chadwing.cox@westerneci.com

August 16, 2019

Town of Keenesburg
140 S Main Street
Keenesburg, CO 80643

RE: MARKET STREET BUSINESS PARK DEVELOPMENT PRELIMINARY PLAT SUBMITTAL

Dear Town Staff,

Please find the attached Land Use Application and supporting documents for the Market Street Business Park Subdivision Development Preliminary Plat submittal.

This letter is intended to serve as the Project narrative

General Information and Brief Project Description:

The theme of the Market Street Business Park is to provide a Highway Commercial Zoned Business Park. Currently 4 lots are proposed.

Currently 9.46 acres are proposed to be developed into 4 business park lots. After WCR 18, Veterans Drive, and Pippen Lane right of way dedications the net developable area is approximately 8.91 acres.

The current Zoning within the Town of Keenesburg is Commercial Highway (CH). No change in zoning is proposed.

Single family residences lie to the west across the 2007 vacated alley. WCR 18 lies to the north (Ag zoning north of it), Market Street to the east (CH east of it), and Pippen Lane to the south (CDOT I 76 south of it).

Owner:	Keene Land Holdings, LLC. 8537 CR 51 Keenesburg, CO 80643
Civil Engineer:	Western Engineering Consultants Inc. LLC 127 South Denver Avenue Fort Lupton CO, 80621
Land Surveyor:	American West, Land Surveyor South 4th Avenue Brighton, CO 80601 Curtis Hoos PLS

Traffic Engineer:	LSC. Transportation Consultants 1889 York Street Denver, CO 80206 303-333-1105 Christopher S. McGranahan, PE
Geotechnical Engineer:	InTEC 4501 Wadsworth Blvd. Wheatridge, CO 800033 303-463-9317 Douglas D. House, PE
Electrical Engineer:	To Be Determined
Drainage Engineer:	Western Engineering Consultants Inc. LLC. 127 South Denver Avenue Fort Lupton, CO 80621
Location of site:	800 North Market Street Keenesburg, CO 80643
Total Site Area:	**9.46 Acres (412,218 sf)**
Total Build-out Area:	**8.91 Acres (388,120 sf)**

Other Site Features:

Market Street improvements

Dedication and construction of Veterans Drive (60-foot complete right of way) Utility extensions and looping (Veterans and WCR 18 connection to Cedar Street

COMPREHENSIVE PLAN:
The current Land Use Plan for this area shows the property as Highway Commercial use which matches the proposed and current zoning.

ZONING DISTRICT:
The existing Zone District is Commercial Highway.

DENSITY:
The maximum density will be determined as allowed by zoning code.

DIVERSITY:
The proposed lots are in demand and there is only one CDOT I 76 interchange in Keenesburg. The proposed subdivision will provide additional development opportunities to the Town of Keenesburg.

LAND USES:
Single family residential to the west, AG (Weld County) to the north, Commercial Highway east, Interstate 76 and Commercial Highway south.

CONNECTIVITY:
The 4 lots will be directly connected to Town of Keenesburg right of way (Veterans Drive) and either Cedar Street or more likely Market Street and direct to Interstate I 76.

OPEN SPACE:
No open space is proposed.

ROADWAY NETWORK:
The Town has existing roadways to the east and west. Veterans Drive Some improvements are expected to each.

TREATMENTS TO ROADWAYS
Some improvements to Market Street will occur and a completely new roadway (Veterans Drive) will be constructed between Market Street and Cedar Street.

LOT LAYOUT:
4-5 lots (variable sizes – ½ acre to multi acre) are proposed in Market Street Business Park.

LOT INTERFACE WITH ROADWAYS:
Each lot within Market Street Business Park will connected direct to proposed Veterans Drive which will be directly connected to Market Street near the I 76 interchange.

LOT SIZE DIVERSITY:
Since this is an industrial subdivision there is no diversity is proposed here-in – however each lot will be individually developed so they will have diversity from each other.

SETBACKS:
The setbacks are 25 feet front and rear and 10 feet each side.

LOT SIZES ENHANCING STREETCAPE:
Lot sizes vary from just over one acre to approximately 5 acres. No streetscape landscape is currently proposed along the Town standard Industrial road cross section. .

COMMON AREAS:
Currently none are proposed.

FENCING:
All site fencing is proposed to be handled by each individual lot owner in accordance with Town regulations with exception to the west lots (1 and 4) that abut the residential lots to the west. Screened fence and a landscape buffer will be required along the west lot boundary.

AMENITIES, ENTRIES, CONNECTIVITY, ARCHITECTURAL & LANSCAPE DESIGNS FOR EACH LOT
Due to the size of the property – no additional amenities are proposed. Each commercial highway lot development will be individually designed (with exception to the west boundary of Lots 1 and 4 along the residential properties).

IRRIGATION SYSTEM
Each lot will be required to have its own irrigation system. It is expected each lot will include varying levels of xeriscape.

POTABLE WATER:
Potable water does currently exist, however significant waterline improvements (re-built along Market Street, extend along WCR 18 to Cedar St, and a new watermain in Veterans Drive) will be constructed as part of this project.

ADEQUATE POTABLE WATER:
Pursuant to the Pre-Application meeting – Town of Keenesburg adequate water is said to not be an issue.

STORM WATER MANAGEMENT:
This project will detain stormwater as allowed by the Town of Keenesburg and CDOT regarding release to the CDOT right of way. In 2007 the drainage system was coordinated between the Town and CDOT and as this project moves forward it will be coordinated through the Town's review process.

COMMON AREA LANDSCAPE:
Not applicable. All landscaping is expected to be each private lot's responsibility, including the screening buffer to the west.

OFF STREET PARKING:
Based on the lot sizes no on street parking is expected and each lot will have adequate parking.

EXTERIOR LIGHTING:
The applicant is awaiting the Town's direction on lighting of the public rights of way. Any right of way lighting will have to adhere to standard photometric plans. It is assumed requirements will be similar to the Diamond K project and lighting proposed on Cedar Street.

POTENTIAL IMPACT ON ADJACENT NEIGHBORHOODS:
Actual construction typically negatively effects adjacent properties, however the long-term impact of this development is estimated have little effect on the adjacent roadways and adjacent neighbors and have significant positive economic impacts to the Town.

SMELLS:
No new smells are expected to occur.

EXISTING OR PROPOSED MINERAL DEVELOPMENT – STATE OF OWNERSHIP – CONFLICTS:
See attached summary of mineral rights. Based on the site of the property it is not expected that any limitations will occur. No conflicts are anticipated.

PUBLIC IMPROVEMENTS:
Veterans Drive is proposed as al 60 foot public right of way with 40 feet of asphalt pavement and concrete curb and gutter.

ACCESS:
Each lot will have its own access to Veterans Drive per Keenesburg driveway details.

GRADING:
The grading design is intended to follow typical commercial development and subdivision lot grading - lot line swales draining both to the front, rear, or sides lot lines and direct all runoff to the subdivision detention pond.

STORM SEWER:
On site conveyance will be via grass swales and concrete pans. One storm pipe crossing of Veterans Drive is proposed with the initial subdivision construction. Pond release will be to the existing CDOT road culvert (under Interstate 76) that lies to the southeast of the property. Storm culverts are also expected at Veterans Drive connection to Market Street.

SANITARY SEWER:
An existing sanitary main lies within the former alley along the west property line. A new sanitary main will be built within Veterans Drive and stubbed to each of the proposed lots in order to receive the proposed lots sewage. See also the Sketch Plan Utility sheet (5).

WATER:
Potable water does currently exist, however significant waterline improvements (re-built along Market Street, extend along WCR 18 to Cedar St, and a new watermain in Veterans Drive) will be constructed as part of this project. See also the Sketch Plan Utility sheet (5).

GAS AND ELECTRIC:
It is unclear whether an existing gas line is near the property however electric does exist. Pursuant to the Diamond K Subdivision work, Atmos appears to be the closest gas line approximately 1,300 feet away.

An electric distribution system is proposed to be buried along all the proposed RK Drive to serve each proposed Lot.

WILL SERVICE LETTERS:
The Owner has contacted South East Weld County Fire Rescue (SEWCFR) requesting service. A Fire Truck access analysis has been performed using SEWCR Fire Truck template.

Water will be provided by the Town of Keenesburg system. Sewage will be private On Site Wastewater System (Septic) in accordance with Weld County OWTS criteria. See also the Sketch Plan Utility sheet (5).

Electricity is provided by United Power. Gas may be available – it is unclear if it will be provided by Xcel Energy or Atmos Energy. WEC has requested Will Serve Letters from both. See also the Sketch Plan Utility sheet (5).

SURVEYS:
The Site topography and boundary survey was provided by American West Land Surveyors in Brighton

PRELIMINARY PLAT REVIEW APPLICATION CHECKLIST:

The following is a summary of the checklist items:

1. All items required for the sketch plan application, To contain all changes or conditions of approval	included
2. Application form & fee deposits	included
3. Must meet all requirements of CRS 38-51	included
4. A grading and drainage plan and report	included
5. Sanitary sewer design	Included
6. Street Plan and cross sections	Included
7. Traffic Study -General traffic overview and analysis	in process
8. Primary engineer's estimate of cost	included
9. Traffic Study	Not Required
10. Geotechnical analysis	included

Please contact me with any questions or comments you may have on our proposal for this project!

Sincerely,

Western Engineering Consultants inc., LLC
Chadwin F. Cox, P.E.
Senior Project Manager

Encl. Preliminary Plan Application package

MARKET STREET BUSINESS PARK

ENGINEERS ESTIMATE - CIVIL RELATED PUBLIC IMPROVEMENTS (Veterans Drive & Utilities)
August 16, 2019

ITEM		UNIT	ESTIMATED QUANTITY	APPROXIMATE UNIT PRICE , $	TOTAL COST, $
MOBILIZATION / DEMOLITION					
Mobilization		ls	1	10,000	10,000
Sawcut at Veterans Drive Connection to Cedar St & Market St		lf	220	5	1,100
Relocate Existing Overhead Power/Utility Pole		ea	0	2,500	0
Relocate Existing Phone Pedestal		ea	1	1,000	1,000
Demo Ex. Concrete Pad		sf	0	2	0
Remove Ex. Fence		lf	401	3	1,203
Demo Ex. Electric Overhead lines		lf	80	4	320
Demo Ex. Electric Private Overhead Poles		ea	0	500	0
SUBTOTAL					**13,623**
EARTHWORK & ROADWAY / SURFACE MATERIALS					
Surface to Surface Earthwork Cut & temp stockpile as necessary - Road and Rough Grade Only	RD & RG ONLY	cy	452	2.00	904
Surface to Surface Earthwork Fill (Assumed 10% shrink) - Road & Rough Grade Only	RD & RG ONLY	cy	1,261	2.00	2,522
Import Structural Fill (Recycled conc ,Class 6, or approved equal) - 8" under asphalt paving	ROAD ONLY	cy	663	25	16,578
Finish surface (concrete) - Veterans Drive between future Market and existing Cedar		sf	2,984	5	14,920
Finish surface (asphalt) - temporary between Veterans Drive and existing Market		sy	378	45	17,000
Finish surface (Recycled conc, Class 6, or approved equal)		cy	0	15	0
SUBTOTAL					**51,924**
CONCRETE					
Curb & Gutter		lf	1,488	25	37,200
Attached 8' Sidewalk		sf	11,904	5.00	59,520
50' R Curb Return Assembly		ea	2	5,000	10,000
20' R Curb Return Assembly		ea	8	3,000	24,000
Misc Concrete		ls	1	5,000	5,000
SUBTOTAL					**135,720**
EROSION CONTROL (SF, ECB, TOP, VTC, CWA, IP, etc)					
Storm Water Management Plan & Site Erosion Control - Disturb 13.3 ac, Seed 10 ac - see Landscape for seeding		ls	1	25,000	25,000
SUBTOTAL					**25,000**

MARKET STREET BUSINESS PARK

ENGINEERS ESTIMATE - CIVIL RELATED PUBLIC IMPROVEMENTS (Veterans Drive & Utilities)
August 16, 2019

ITEM	UNIT	ESTIMATED QUANTITY	APPROXIMATE UNIT PRICE , $	TOTAL COST, $
ELECTRIC, GAS & PHONE SYSTEM				
Connection to Ex. Electric System (United Power)	each	2	2,500	5,000
Phase 3 Transformer	each	1	25,000	25,000
Market Street Electric Main	lf	690	15	10,350
Veterans Drive Electric Main (both sides)	lf	1,177	10	11,770
Switch Boxes	each	4	1,000	3,734
Subdivision Light Poles	each	4	3,000	12,000
Connection to Ex. Gas System	each	1	2,500	2,500
Market Street Gas Main	lf	690	15	10,350
Veterans Drive Gas Main (both sides)	lf	1,177	10	11,770
Market Street Phone Conduits	lf	690	10	6,900
Veterans Drive Phone Conduits	lf	1,177	10	11,770
Phone Boxes	each	9	500	4,668
				115,812
WATER SYSTEM				
Connection to Existing system	each	2	2,500	5,000
WCR 18 to Cedar St - 10" PVC (C900) Watermain w/ restraints for each fitting	lf	41	60	2,460
WCR 18 - 8" PVC (C900) Watermain w/ restraints for each fitting	lf	784	60	47,040
Market Street - 8" PVC (C900) Watermain w/ restraints for each fitting	lf	388	60	23,280
Market Street - 6" PVC (C900) Watermain w/ restraints for each fitting	lf	341	50	17,050
Veterans Drive - 8" PVC (C900) Watermain w/ restraints for each fitting	lf	799	60	47,940
Veterans Drive - 6" PVC (C900) Watermain w/ restraints for each fitting	lf	119	50	5,950
WCR 18 - 6" DIP Hydrant Runs - each joint and fitting restrained	lf	14	50	700
WCR 18 - Hydrant Tee & G.V. (6" GV on FH run, 8" GV on main)	each	1	2,500	2,500
WCR 18 - Fire Hydrants	each	1	5,000	5,000
Market St - 6" DIP Hydrant Runs - each joint and fitting restrained	lf	29	50	1,450
Market St - Hydrant Tee & G.V. (6" GV on FH run, 8" GV on main)	each	2	2,500	5,000
Market St - Fire Hydrants	each	2	5,000	10,000
Veterans Dr - 6" DIP Hydrant Runs - each joint and fitting restrained	lf	104	50	5,200
Veterans Dr - Hydrant Tee & G.V. (6" GV on FH run, 8" GV on main)	each	3	2,500	7,500
Veterans Dr - Fire Hydrants	each	3	5,000	15,000
Pipe Support Crossing	each	1	1,500	1,500
1" HDPE Water service pipe	lf	50	25	1,250
Service line taps	each	1	500	500
10"x8" Restrained Tee w/ Thrust Block and 1-8" Gate Valve and 1-10" Gate Valve	each	2	2,500	5,000
8"x8" Restrained Tee w/ Thrust Block and 2-8" Gate Valves	each	4	2,500	10,000
8" Restrained Plug w/ Thrust Block	each	3	1,500	4,500
6" Restrained Plug w/ Thrust Block	each	3	1,500	4,500
11.25 deg Horizontal Bend 8" dia	each	1	3,500	3,500
22.5 deg Horizontal Bend 8" dia	each	4	3,500	14,000
90 deg Horizontal Bend 6" dia	each	2	3,500	7,000
Vertical Bend	each	0	3,500	0
Temporary Blow Off	each	4	1,000	4,000
SUBTOTAL				**256,820**

MARKET STREET BUSINESS PARK

ENGINEERS ESTIMATE - CIVIL RELATED PUBLIC IMPROVEMENTS (Veterans Drive & Utilities)
August 16, 2019

ITEM	UNIT	ESTIMATED QUANTITY	APPROXIMATE UNIT PRICE , $	TOTAL COST, $
STORM SYSTEM				
Pipe Support Crossing	each	1	1,500	1,500
18" RCP	lf	202	75	15,148
24" RCP	lf	542	80	43,396
30" RCP	lf	289	85	24,554
18" RCP FES	each	3	100	300
24" RCP FES	each	2	100	200
5' CDOT Type R Inlet	each	4	6,000	24,000
6' DIA Man Hole	each	3	3,500	10,500
24" Impact Stilling Basin	each	1	7,500	7,500
30" Impact Stilling Basin	each	1	8,500	8,500
Forebay W	each	1	4,000	4,000
Forebay A	each	1	2,500	2,500
Forebay B	each	1	3,500	3,500
Trickle Channel	lf	1	5,000	5,000
Outlet Structure	each	1	7,500	7,500
SUBTOTAL				**158,098**
SEWER IMPROVEMENT				
Connection to Existing system	each	1	1,500	1,500
8" PVC SDR-35 Main (10 ft average bury to FG)	lf	885	50	44,250
Core 8" PVC SDR-35 Connection to Ex. Town MH #__	ls	1	2,500	2,500
48 inch diameter Manholes	each	6	3,000	18,000
8" PVC SDR-35 Service Stubs	lf	35	50	1,750
6" PVC SDR-35 Service Stubs	lf	105	40	4,200
Service line taps	each	3	500	1,500
Standard Cleanout pairs	each	1	500	500
SUBTOTAL				**74,200**
120				
480				
LANDSCAPE - SIGNAGE - STRIPING				
Evergreen Trees	each	65	350	22,750
Deciduous Trees	each	55	400	22,000
Shrubs	each	480	30	14,400
Irrigation Drip system	ls	1	10,000	10,000
Seed disturbed areas	acre	9.5	1,500	14,220
Fence	lf	0	25	0
Stop Signs	each	2	1,000	2,000
Paint Striping (turn lanes, separation, stop bars, directional arrows, etc)	ls	1	7,500	7,500
SUBTOTAL				**92,870**

MARKET STREET BUSINESS PARK

ENGINEERS ESTIMATE - CIVIL RELATED PUBLIC IMPROVEMENTS (Veterans Drive & Utilities)
August 16, 2019

ITEM	UNIT	ESTIMATED QUANTITY	APPROXIMATE UNIT PRICE , $	TOTAL COST, $
PROFESSIONAL SERVICES				
Design Services (assumed as 7% of Civil Construction Costs)	ls	1	65,000	65,000
Traffic Analysis	ls	1	5,000	10,000
Construction Surveying	ls	1	7,500	7,500
Construction Engineering Services	ls	1	5,000	5,000
As-Built Engineering Services	ls	1	7,500	6,000
SUBTOTAL				**93,500**
TOTAL ESTIMATED COST		(rounded)		**1,018,000**
CONTINGENCY		(25%)		**254,500**
GRAND TOTAL ESTIMATED COST		(rounded)		**1,273,000**

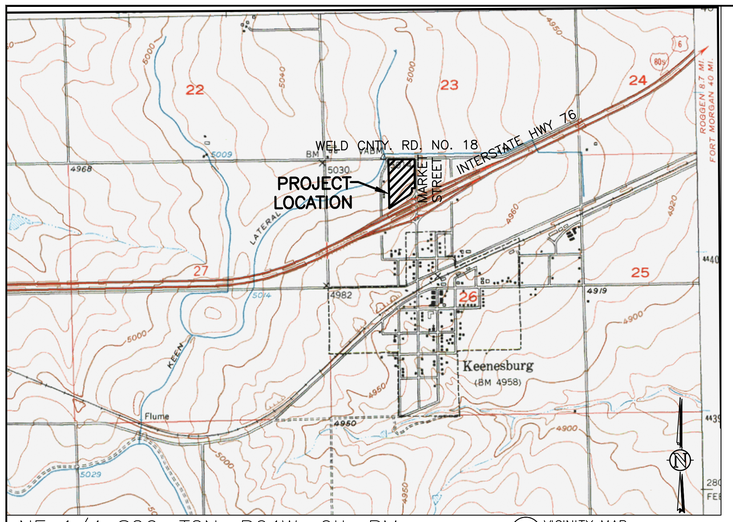

NE 1/4 S26, T2N, R64W, 6th PM
SHOWN VICINITY MAP TAKEN FROM USGS QUAD – KEENESBURG 40104–A5

VICINITY MAP
1" = 1,000'

LEGAL DESCRIPTION

A PART OF THE NORTHWEST 1/4 OF SECTION 26, TOWNSHIP 2 NORTH, RANGE 64 WEST OF THE 6TH P.M., DESCRIBED AS FOLLOWS:

BEGINNING AT A POINT ON THE WESTERLY LINE OF TRACT NO. 2 DESCRIBED IN INSTRUMENT RECORDED IN BOOK 1516 AT PAGE 619, WHICH POINT IS ALSO ON THE NORTHERLY LINE OF A TRACT CONVEYED TO THE TOWN OF KEENESBURG BY INSTRUMENT RECORDED IN BOOK 1558 AT PAGE 405 AND FROM WHICH POINT THE NORTHWEST CORNER OF SAID SECTION 26 BEARS NORTH 52°37'30" WEST, 1677.4 FEET; THENCE NORTH 00°45' WEST, ALONG THE WESTERLY LINE OF SAID TRACT NO. 2, DESCRIBED IN BOOK 1516 AT PAGE 619, AND ALONG THE NORTHERLY EXTENSION OF SAID LINE, 1030 FEET, MORE OR LESS, TO A POINT ON THE NORTH LINE OF SAID SECTION 26; THENCE EAST, ALONG THE NORTH LINE OF SAID SECTION, 510 FEET, MORE OR LESS, TO A POINT ON THE WEST LINE OF MARKET STREET / HWY 76B; THENCE SOUTH 00°15'30" EAST, ALONG THE WEST LINE OF MARKET STREET 595 FEET, MORE OR LESS, TO THE MOST NORTHEASTERLY CORNER OF THE SAID TRACT CONVEYED TO THE TOWN OF KEENESBURG BY INSTRUMENT RECORDED IN BOOK 1558 AT PAGE 405; THENCE ALONG THE BOUNDARIES OF SAID KEENESBURG TRACT, THE FOLLOWING COURSES AND DISTANCES;
SOUTH 89°44'30" WEST, 30 FEET;
SOUTH 00°15'30" EAST, 74.8 FEET;
SOUTH 33°45' WEST, 81.6 FEET;
SOUTH 56°48'30" WEST, 511.6 FEET TO THE POINT OF BEGINNING

TOGETHER WITH THAT PROPERTY DESCRIBED IN DEED RECORDED IN BOOK 1558 AT PAGE 405 OF THE RECORDS OF THE CLERK AND RECORDER FOR WELD COUNTY COLORADO DESCRIBED AS FOLLOWS:

A TRACT OR PARCEL OF LAND CONTAINING 0.48 ACRES, MORE OR LESS, IN THE EAST 1/2 OF THE NORTHWEST 1/4 OF SECTION 26, TOWNSHIP 2 NORTH, RANGE 64 WEST OF THE SIXTH PRINCIPAL MERIDIAN, IN WELD COUNTY, COLORADO, SAID TRACT OR PARCEL BEING MORE PARTICULARLY DESCRIBED AS FOLLOWS:

BEGINNING AT A POINT ON THE WEST PROPERTY LINE FROM WHICH THE NORTHWEST CORNER OF SECTION 26, TOWNSHIP 2 NORTH, RANGE 64 WEST, BEARS NORTH 52°37'30" WEST, A DISTANCE OF 1677.4 FEET;

1) THENCE NORTH 56°48'30" EAST, A DISTANCE OF 511.6 FEET;
2) THENCE NORTH 33°45' EAST, A DISTANCE OF 81.6 FEET;
3) THENCE NORTH 00°15'30" WEST, A DISTANCE OF 74.8 FEET;
4) THENCE NORTH 89°44'30" EAST, A DISTANCE OF 30.0 FEET TO THE EXISTING NORTHERLY RIGHT–OF–WAY OF STATE HIGHWAY NO. 2;
5) THENCE SOUTH 00°15'30" EAST, ALONG THE EXISTING NORTHERLY RIGHT–OF–WAY OF STATE HIGHWAY NO. 2, A DISTANCE OF 84.0 FEET;
6) THENCE SOUTH 33°45' WEST, ALONG THE EXISTING NORTHERLY RIGHT–OF–WAY OF STATE HIGHWAY NO. 2, A DISTANCE OF 96.9 FEET;
7) THENCE SOUTH 56°48'30" WEST, ALONG THE EXISTING NORTHERLY RIGHT OF WAY OF STATE HIGHWAY NO. 2, A DISTANCE OF 537.1 FEET TO THE WEST PROPERTY LINE;
8) THENCE NORTH 00°22'30" WEST, ALONG THE WEST PROPERTY LINE, A DISTANCE OF 35.7 FEET, MORE OR LESS, TO THE TRUE POINT OF BEGINNING.

BASIS OF BEARING & PROJECT BENCHMARK

BASIS OF BEARING: THE NORTH LINE OF THE NORTHWEST 1/4 OF SECTION 26, TOWNSHIP 2 NORTH, RANGE 64 WEST OF THE 6TH P.M., IN WELD COUNTY, COLORADO IS ASSUMED TO BEAR SOUTH 89°59'30" EAST, AS MONUMENTED HEREON, WITH ALL BEARINGS CONTAINED HEREON RELATIVE THERETO.

PROJECT BENCHMARK: COLORADO DEPARTMENT OF TRANSPORTATION CONTROL POINT "CP 3892 / MP 38.92" 3 1/4" ALUMINUM CAP IN THE WEST CENTER MEDIAN OF INTERSTATE 76 AT KEENSBURG EXIT. ELEVATION 1523.411 METERS OR 4998.07 FEET (NAVD 1988).

SITE BENCHMARK: WAS ESTABLISHED BEING A 3" BRASS CAP IN CONCRETE LYING FIVE FEET WEST OF A CONCRETE IRRIGATION DITCH NEAR THE INTERSECTION OF COUNTY ROAD 18 AND NORTH CEDAR STREET, AND THIRTY FEET NORTH OF THE CENTERLINE OF COUNTY ROAD 18. STAMPED "NATIONAL GEODETIC SURVEY ACD 1" HAVING AN ELEVATION OF 5008.06 FEET (NAVD 1988)

SHEET INDEX:

	REVISIONS	SHEET	
GENERAL	0 1	C0.00	COVER SHEET
	0	C0.01	GENERAL NOTES & SPECIFICATIONS
	0	C0.02	EXISTING CONDITIONS & DEMO PLAN
	0	C0.03	DETAILED EX. CONDITIONS & DEMO PLAN
	0	C0.04	HORIZONTAL CONTROL PLAN
	0	C0.05	ROAD DESIGN TYPICAL CROSS SECTIONS
	0	C0.06	PAVING PLAN
SITE	0	C1.00	SITE PLAN
UTILITIES	0	C2.00	UTILITY PLAN
	0	C2.01	WATERLINE PLAN
	0	C2.02	SANITARY SEWER PLAN & PROFILE
	0	C2.03	SANITARY SEWER PLAN & PROFILE
	0	C2.04	CONCEPT #1 SAN SEWER PLAN & PROFILE
	0	C2.05	CONCEPT #2 SAN SEWER PLAN & PROFILE
	0	C2.06	WCR 18 WATERLINE PLAN & PROFILE
	0	C2.07	WCR 18 WATERLINE PLAN & PROFILE
	0	C2.08	MARKET ST WATERLINE PLAN & PROFILE
	0	C2.09	MARKET ST WATERLINE PLAN & PROFILE
	0	C2.10	VETERANS DRIVE WATERLINE PLAN & PROFILE
	0	C2.11	VETERANS DRIVE WATERLINE PLAN & PROFILE
	0	C2.12	WCR 18 WATERLINE & FH PLAN & PROFILE
	0	C2.13	FIRE HYDRANT PLAN & PROFILE
	0	C2.14	UTILITY DETAILS
	0	C2.15	UTILITY DETAILS
	0	C2.16	UTILITY DETAILS
GRADING	0	C3.00	OVERLOT GRADING PLAN
	0	C3.01	GRADING DETAILS
	0	C3.02	VETERANS DRIVE PLAN & PROFILE
	0	C3.03	VETERANS DRIVE PLAN & PROFILE
DRAINAGE	0 1	C4.00	HISTORIC & EXISTING DRAINAGE
	0 1	C4.01	INTERIM DRAINAGE PLAN
	0 1	C4.02	FINAL DRAINAGE PLAN
	1	C4.02A	STORM SYSTEM PLAN
	0 1	C4.03	STORM SEWER PLAN & PROFILE
	0 1	C4.04	STORM SEWER PLAN & PROFILE
	0 1	C4.05	DRAINAGE DETAILS
	1	C4.06	OUTLET STRUCTURE DETAILS
	0 1	C4.07	DRAINAGE DETAILS
	1	C4.08	FOREBAY DETAILS
STREETS/ SIGNAGE	0	C5.00I	INTERIM STRIPING & SIGNAGE PLAN
	1	C5.00F	FINAL STRIPING & SIGNAGE PLAN
	0	C5.01	CDOT & MISC. DETAILS
	0	C5.02	CDOT & MISC. DETAILS
	0	C5.03	SIGN DETAILS
	0	C5.04	SIGN DETAILS
EROSION CONTROL	0	C6.00	INITIAL GESC PLAN
	0	C6.01	INTERIM GESC PLAN
	0	C6.02	FINAL GESC PLAN
	0	C6.03	EROSION CONTROL DETAILS
	0	C6.04	EROSION CONTROL DETAILS
	0	C6.05	EROSION CONTROL DETAILS
	0	C6.06	EROSION CONTROL DETAILS
LANDSCAPE	0	C7.00	LANDSCAPE PLAN
	0	C7.01	LANDSCAPE DETAILS
	0	C7.02	LANDSCAPE CROSS SECTION

CONSTRUCTION DOCUMENTS FOR:

MARKET STREET BUSINESS PARK SUBDIVISION
WELD CNTY RD 18 & MARKET ST
KEENESBURG, CO

PREPARED FOR:

KEENE LAND HOLDINGS LLC
RICK ROBERTSON
8537 WCR 51
KEENESBURG, CO 80643
(303)961-0031

APPROVED BY:

KEENE LAND HOLDINGS LLC DATE
RICK ROBERTSON

WESTERN ENGINEERING CONSULTANTS, INC, LLC
CHADWIN F. COX, P.E.

COLORADO REGISTERED CHADWIN F. COX FOR 33802 REVIEW ONLY 08/16/19 PROFESSIONAL ENGINEER

0	**INITIAL RELEASE FOR REVIEW:**	**AUGUST 6, 2019**
1	**UPDATED DRAINAGE - TOWN SUBMITTAL**	**AUGUST 16, 2019**

UNCC CALL BEFORE YOU DIG

811 Utility Notification Center of Colorado
Administrative Office
16361 Table Mountain Parkway
Golden, Colorado 80403
Office: 303-232-1991 Fax: 303-234-1712
Toll-Free: 1-800-922-1987

CALL 2–BUSINESS DAYS IN ADVANCE BEFORE YOU DIG, GRADE, OR EXCAVATE FOR THE MARKING OF UNDERGROUND MEMBER UTILITIES.

PREPARED BY:

Western Engineering Consultants, inc. LLC

WESTERN ENGINEERING CONSULTANTS, inc. LLC
127 SOUTH DENVER AVE, FORT LUPTON CO 80621
303-961-0031 PH, 720-294-1330 FAX, email@westerneci.com

PROJECT NO: 00–0187–003–00
INITIAL PLAN RELEASE: August 15, 2019
SHEET: **1 of 55**

T:\0187_003_00-KEENE LAND-MARKET BUS PARK\Dwg\CDs\0187_003-WECI-CDS-0.00-1.00.dwg, C0.00-COVER, 8/16/2019 6:08:57 PM, AutoCAD PDF (High Quality Print).pc3, WEC 24"36, WEC 24"36

NOT FOR TOWN REVIEW - FOR CONTRACT DOCUMENTS ONLY

TOWN of KEENESBURG NOTES & REQUIREMENTS SHALL GOVERN. ALL OTHER NOTES THIS SHEET ARE FOR CONTRACT DOCUMENTS.

ALL REFERENCES HERE-IN THIS PLAN SET TO "CITY" or "TOWN" SHALL BE INTERPRETED AS MEANING KEENESBURG.

SUPPLEMENTAL CONSTRUCTION NOTES

(TOWN of KEENESBURG NOTES & REQUIREMENTS SHALL GOVERN)

GENERAL CONSTRUCTION NOTES:

1. ALL WORK WITHIN THE PUBLIC RIGHT-OF-WAY, OR EASEMENT, SHALL CONFORM TO TOWN of KEENESBURG CONSTRUCTION SPECIFICATIONS AND DESIGN STANDARDS. IN THE CASE SUCH STANDARDS ARE NOT PROVIDED, CDOT STANDARDS SHALL APPLY.
2. THE CONTRACTOR IS RESPONSIBLE FOR OBTAINING ALL REQUIRED PERMITS PRIOR TO COMMENCEMENT OF ANY WORK ON THE PROJECT.
3. THE CONTRACTOR IS RESPONSIBLE TO NOTIFY THE OWNER and the TOWN OF ANY PROBLEMS IN CONFORMING TO THE APPROVED PLANS FOR ANY ELEMENT OF THE PROPOSED IMPROVEMENTS PRIOR TO ITS CONSTRUCTION.
4. IT IS THE RESPONSIBILITY OF THE CONTRACTOR DURING CONSTRUCTION ACTIVITIES TO RESOLVE CONSTRUCTION PROBLEMS DUE TO CHANGED CONDITIONS OR DESIGN ERRORS ENCOUNTERED BY THE CONTRACTOR DURING THE PROGRESS OF ANY PORTION OF THE PROJECT. IF, IN THE OPINION OF THE OWNER, THE MODIFICATIONS PROPOSED BY THE CONTRACTOR TO THE APPROVED PLANS INVOLVE SIGNIFICANT CHANGES TO THE CHARACTER OF THE WORK, OR TO THE FUTURE CONTIGUOUS PUBLIC OR PRIVATE IMPROVEMENTS, THE CONTRACTOR SHALL BE RESPONSIBLE FOR RESUBMITTING THE REVISED PLAN TO THE OWNER FOR APPROVAL PRIOR TO ANY FURTHER CONSTRUCTION RELATED TO THAT PORTION OF THE PROJECT. ANY IMPROVEMENTS NOT CONSTRUCTED IN ACCORDANCE WITH THE APPROVED PLANS, OR THE APPROVED REVISED PLANS, SHALL BE REMOVED AND RECONSTRUCTED ACCORDING TO THE APPROVED PLANS.
5. THE GRADING PLAN IS FOR ROUGH GRADING ONLY. CHANGES MAY BE NECESSARY TO BRING PLANS INTO CONFORMANCE WITH APPROVED FINAL DRAINAGE PLAN AND SITE PLAN.
6. A WATER TRUCK, IF CALLED BY THE INSPECTOR (OR PUBLIC WORKS DEPARTMENT (PWD)), WILL BE PROVIDED, BY THE CONTRACTOR, TO MAINTAIN DUST CONTROL.
7. ANY SETTLEMENT OR SOIL ACCUMULATION, BEYOND THE PROPERTY LIMITS, DUE TO GRADING OR EROSION, SHALL BE REPAIRED BY THE CONTRACTOR IMMEDIATELY.
8. NO GRADING SHALL TAKE PLACE IN DELINEATED FLOOD HAZARD AREAS UNTIL THE FINAL DRAINAGE PLAN HAS BEEN APPROVED AND ALL APPROPRIATE PERMITS HAVE BEEN OBTAINED.
9. ANY CONSTRUCTION DEBRIS OR MUD TRACKING ONTO THE PUBLIC RIGHT-OF-WAY, RESULTING FROM THE PROJECT, SHALL BE REMOVED IMMEDIATELY BY THE CONTRACTOR. THE CONTRACTOR SHALL IMMEDIATELY FIX ANY EXCAVATION OR EXCESSIVE PAVEMENT FAILURE CAUSED BY PROJECT, AND SHALL PROPERLY BARRICADE THE SITE UNTIL CONSTRUCTION IS COMPLETE. FAILURE BY THE CONTRACTOR TO CORRECT ANY OF THE ABOVE WITHIN 48 HOURS OF WRITTEN NOTICE, BY THE TOWN, SHALL CAUSE THE TOWN TO ISSUE A STOP WORK ORDER (RED TAG) AND/OR DO THE WORK AND MAKE A CLAIM AGAINST THE PROJECT'S LETTER OF CREDIT FOR ANY COSTS INCURRED BY THE TOWN.
10. THE CONTRACTOR SHALL BE SOLELY, AND COMPLETELY RESPONSIBLE FOR THE CONDITIONS AT, AND ADJACENT TO, THE JOB SITE, INCLUDING SAFETY OF ALL PERSONS AND PROPERTY, DURING THE PERFORMANCE OF THE WORK. THIS REQUIREMENT SHALL APPLY CONTINUOUSLY, AND SHALL NOT BE LIMITED TO, NORMAL WORKING HOURS. THE DUTY OF THE TOWN TO CONDUCT CONSTRUCTION REVIEW OF THE CONTRACTOR'S PERFORMANCE IS NOT INTENDED TO INCLUDE REVIEW OF THE ADEQUACY OF THE CONTRACTOR'S SAFETY MEASURES IN, ON, OR NEAR THE CONSTRUCTION SITE.
11. THE CONTRACTOR SHALL BE RESPONSIBLE FOR OBTAINING UTILITY LOCATIONS AT LEAST 48 HOURS PRIOR TO COMMENCEMENT OF CONSTRUCTION.
12. ~~ALL UTILITY POLES SHALL BE RELOCATED PRIOR TO PLACEMENT OF ANY CONCRETE BY THE ____________ ELECTRIC DEPARTMENT. ALL FACILITIES THAT NEED RELOCATION BY THE ELECTRIC DEPARTMENT WILL BE BILLED TO THE DEVELOPER.~~
13. THE CONTRACTOR SHALL NOTIFY ALL UTILITY OWNERS PRIOR TO ADJUSTING ALL CLEANOUTS, MANHOLES, VALVE BOXES, SURVEY MONUMENTS, AND ANY OTHER FIXTURES TO FINISHED GRADE PRIOR TO FINAL PAVING.
14. THE CONTRACTOR SHALL PROVIDE ALL LIGHTS, SIGNS, BARRICADES, FLAGPERSONS, OR OTHER DEVICES NECESSARY TO PROVIDE FOR PUBLIC SAFETY, IN ACCORDANCE WITH THE CURRENT MANUAL ON UNIFORM TRAFFIC CONTROL DEVICES.
15. THE CONTRACTOR SHALL PROVIDE INGRESS AND EGRESS TO PRIVATE PROPERTY ADJACENT TO THE PROJECT THROUGHOUT THE PERIOD OF CONSTRUCTION. PRIOR TO BEGINNING WORK, THE CONTRACTOR SHALL OBTAIN A WRITTEN AGREEMENT FROM THE PROPERTY OWNERS IMPACTED BY THIS ACCESS. ~~UPON REQUEST, THE CONTRACTOR SHALL PROVIDE A COPY OF THESE WRITTEN AGREEMENTS TO THE OWNER.~~
16. PRIOR TO FINAL PLACEMENT OF SURFACE PAVEMENT, ALL UNDERGROUND UTILITY MAINS SHALL BE INSTALLED AND SERVICE CONNECTIONS STUBBED OUT BEYOND CURB LINE, WHEN ALLOWED BY THE UTILITY. SERVICE FROM PUBLIC UTILITIES AND FROM SANITARY SEWERS SHALL BE MADE AVAILABLE FOR EACH LOT IN SUCH A MANNER THAT WILL NOT BE NECESSARY TO DISTURB THE STREET PAVEMENT, CURB, GUTTER, AND SIDEWALK WHEN CONNECTIONS ARE MADE.
17. REPRODUCIBLE COPIES OF "AS BUILT" PLANS SHALL BE SUBMITTED TO THE TOWN PRIOR TO CONSTRUCTION ACCEPTANCE OF THE PUBLIC IMPROVEMENTS (IF ANY PUBLIC IMPROVEMENTS ARE NECESSARY).
18. THE CONTRACTOR SHALL NOTIFY THE TOWN INSPECTOR (OR PWD) AT LEAST 24 HOURS PRIOR TO DESIRED INSPECTION.
19. THE CONTRACTOR SHALL BE RESPONSIBLE TO APPROPRIATELY MARK (BY BAGGING) ALL FIRE HYDRANTS THAT ARE TAKEN OUT OF SERVICE DURING THIS PROJECT. THE CONTRACTOR SHALL NOTIFY THE TOWN FIRE DEPARTMENT AT LEAST 24 HOURS PRIOR TO REMOVING ANY FIRE HYDRANT FROM SERVICE.
20. THE CONTRACTOR SHALL SCHEDULE A PRE-CONSTRUCTION MEETING WITH THE TOWN of KEENESBURG AT LEAST 48 HOURS PRIOR TO COMMENCEMENT OF ANY CONSTRUCTION ACTIVITIES.
21. THE CONTRACTOR SHALL HAVE ONE (1) SIGNED COPY OF THE APPROVED PLANS, ONE (1) COPY OF THE APPROPRIATE STANDARDS AND SPECIFICATIONS. AND A COPY OF ANY PERMITS AND EXTENSION AGREEMENTS NEEDED FOR THE JOB, ON-SITE AT ALL TIMES.
22. THERE SHALL BE NO SITE CONSTRUCTION ACTIVITIES ON SATURDAYS, UNLESS SPECIFICALLY APPROVED BY THE PUBLIC WORKS INSPECTOR, AND NO SITE CONSTRUCTION ACTIVITIES ON SUNDAYS OR HOLIDAYS, UNLESS THERE IS PRIOR WRITTEN APPROVAL BY THE PUBLIC WORKS DIRECTOR.

WESTERN ENGINEERING CONSULTANTS, INC. GENERAL CONSTRUCTION NOTES:

1. ALL CONSTRUCTION SHALL CONFORM TO TOWN DESIGN & CONSTRUCTION SPECIFICATIONS. IN THE CASE SUCH STANDARDS ARE NOT PROVIDED, A PROPER SPECIFICATION SHALL BE FOLLOWED AS AGREED BETWEEN THE OWNER, ENGINEER, AND CONTRACTOR.
2. THE CONTRACTOR IS RESPONSIBLE FOR VERIFYING THE ELEVATION AND O.D. OF ALL EXISTING LINES AT THE POINT OF CONNECTION TO THE NEW SYSTEM PRIOR TO ORDERING MATERIALS THAT DEPEND ON THIS INFORMATION.
3. WESTERN ENGINEERING CONSULTANTS, INC. (WECI) IS NOT A GUARANTOR OF THE CONSTRUCTING CONTRACTORS OBLIGATION AND PERFORMANCE OF WORK.
4. WECI IS NOT RESPONSIBLE FOR SAFETY, IN, ON, OR ABOUT THE PROJECT SITE, NOR FOR COMPLIANCE BY THE APPROPRIATE PARTY OF ANY REGULATIONS THERETO.
5. WECI EXERCISES NO CONTROL OF THE SAFETY OR ADEQUACY OF ANY EQUIPMENT, BUILDING COMPONENTS, SCAFFOLDING, FORMS, OR OTHER WORK AIDS USED IN OR ABOUT THE PROJECT, OR IN THE SUPERVISION OF THE SAME.

~~ARCHITECTURAL INFORMATION:~~

1. ~~THESE PLANS USED THE BUILDING PLAN PREPARED BY ____________, DATED ____________.~~
2. ~~ANY SUBSEQUENT REVISIONS MADE BY ____________ ARE NOT REFLECTED IN THIS PLAN SET. REVISIONS DESCRIBED AND DATED ON INDIVIDUAL SHEETS IN THIS PLAN SET ARE ENGINEERING REVISIONS ONLY.~~

UTILITY LOCATION NOTES

1. COLORADO STATE S.B. 93-155 REQUIRES ANYONE WHO ENGAGES IN ANY TYPE OF EXCAVATION TO PROVIDE ADVANCE NOTICE OF AT LEAST TWO (2) BUSINESS DAYS NOT INCLUDING THE DAY OF ACTUAL NOTICE.

   UTILITY NOTIFICATION CENTER OF COLORADO (UNCC)
   811 OR 1-800-922-1987
2. NEW UTILITIES MAY HAVE BEEN INSTALLED SINCE THE LOCATES FOR THIS PROJECT WERE COMPLETED (ie NOT SHOWN ON PLANS). IT IS THE RESPONSIBILITY OF THE CONTRACTOR TO ATTAIN NEW LOCATES AS STATED BY LAW.
3. IT IS THE CONTRACTOR'S RESPONSIBILITY TO VERIFY AND COORDINATE ADDITIONAL LOCATES IF THE STATE OR ANOTHER UTILITY ENTITY HAS UTILITIES IN THE AREA WHICH WERE NOT IDENTIFIED BY UNCC.

UTILITY POTHOLE & SURVEY NOTES

1. IT IS THE RESPONSIBILITY OF THE CONTRACTOR TO LOCATE ALL EXISTING UTILITIES BOTH HORIZONTALLY AND VERTICALLY PRIOR TO STARTING CONSTRUCTION. LOCATIONS WHERE EXISTING UTILITIES AND PROPOSED CONSTRUCTION CROSS OR POTENTIALLY CONFLICT SHALL BE POTHOLED BY THE CONTRACTOR, ELEVATIONS SURVEYED, AND RESULTS AND CONFLICTS PROVIDED TO WECI. WECI REQUIRES A MINIMUM OF 5 WORKING DAYS FOR RE-DESIGN OF ANY CONFLICTS DISCOVERED BY THE POTHOLE. SEE ALSO CONTRACTOR'S AS-BUILT DRAWING NOTES.
2. THE CONTRACTOR SHALL PROVIDE DRAWINGS OF EXISTING ON-SITE UNDERGROUND UTILITIES AS EXPLAINED WITHIN THE CONTRACTOR'S AS-BUILT DRAWING NOTES. THE CONTRACTOR IS REQUIRED TO PLAN AHEAD AND NOTIFY THE OWNER OF ANY CONFLICTS IN A TIMELY MANNER.

CONTRACTOR'S AS-BUILT DRAWINGS NOTES:

1. THE CONTRACTOR SHALL PROVIDE, AT THE COMPLETION OF THE PROJECT OR EACH PHASE OF THE PROJECT, A COMPLETE SET OF "AS-BUILT" DRAWINGS TO THE OWNER. THE AS-BUILT DRAWINGS WILL CONSIST OF A MARKED-UP SET OF "ISSUED FOR CONSTRUCTION" DRAWINGS VERIFYING THE FOLLOWING:
   - A) ALL LENGTHS, SIZES, AND MATERIALS OF INSTALLED PIPE, MANHOLES, AND ANY OTHER IMPROVEMENT.
   - B) HORIZONTAL LOCATIONS EITHER BY STATION AND OFFSET, OR BY NORTHING AND EASTING COORDINATES OF ALL MANHOLES, BENDS, CLEANOUTS, VALVES, TAPS, WYES, STUBS, PLUGS, TEES, etc.
   - C) INVERT ELEVATION OF EACH CONSTRUCTED PIPE AT: STORM SEWER AND SANITARY SEWER MANHOLES, INLETS, OUTLETS, STUB ENDS, etc. TOP OF PIPE ELEVATIONS OF EACH FOREIGN PIPE OR UTILITY CROSSING.
   - D) CONSTRUCTED SLOPE OF STORM AND SANITARY PIPES BETWEEN MANHOLES AND STRUCTURES.
   - E) TOP OF PIPE ELEVATION AT REGULAR INTERVALS AND/OR FITTINGS FOR WATER LINES, FIRE PROTECTION LINES, GAS LINES, AND ELECTRIC CONDUITS.
   - F) ELEVATIONS AT FLOWLINE OF CURB AND GUTTER AT DESIGN LOCATIONS AND GRADE BREAKS. ELEVATION OF INLET AND TRENCH DRAIN GRATES. TOP OF CURB AT CURB INLETS.
   - G) ANY OTHER VARIATIONS FROM THE CONSTRUCTION DOCUMENTS MUST BE CLEARLY NOTED AND DETAILED ON THE PLANS.
2. THE CONTRACTOR SHALL VERIFY AND SUBMIT, FOR APPROVAL BY THE OWNER, THE GROUND SURFACE ELEVATIONS AT THE FINAL COMPLETION OF THE PROJECT PRIOR TO THE FINAL ACCEPTANCE.
3. THE FINAL AS-BUILT DRAWING CERTIFICATE SHALL BE SIGNED ON EACH SHEET BY THE CONTRACTOR RESPONSIBLE FOR THE WORK.
4. CONTRACTOR AS-BUILT DRAWINGS WILL BE DUE PRIOR TO SUBMITTING THE FINAL PAY REQUEST. NON-CONFORMING AS-BUILT DRAWINGS WILL BE RETURNED TO THE CONTRACTOR FOR REVISIONS AND RESUBMITTAL. FINAL PAYMENT WILL NOT BE APPROVED UNTIL THE OWNER HAS REVIEWED AND APPROVED THE AS-BUILT DRAWINGS.
5. ALL AS-BUILT SURVEYING SHALL MEET COLORADO STANDARD OF CARE. (i.e. horizontal within 0.10-feet and vertical within 0.05-feet). IT IS RECOMMENDED ALL GRAVITY SYSTEMS BE DIFFERENTIAL SURVEYED TO MAINTAIN ACCEPTABLE TOLERANCES.

GEOTECHNICAL NOTES:

1. FOR ALL GEOTECHNICAL RELATED ISSUES (PIPE BEDDING, BACKFILL, IMPORTING FILLS, ASPHALT, ETC). REFERENCE THE "SOILS AND FOUNDATION INVESTIGATION PROPOSED CONSTRUCTION MARKET AND CEDER STREET KEENESBURG, COLORADO" PREPARED BY INTEC DATED OCTOBER 31, 2006, ALSO SEE TOWN DESIGN & CONSTRUCTION STANDARDS & SPECIFICATIONS.

GEOTECHNICAL TESTING:

1. IT IS THE RESPONSIBILITY OF THE CONTRACTOR TO COORDINATE ALL TESTING IN ORDER TO MEET ADJACENT PROPERTY OWNER REQUIREMENTS AND TOWN DESIGN STANDARDS.
2. THE OWNER SHALL PAY FOR TESTING TO MEET THE MINIMUM REQUIRED BY TOWN STANDARDS.
3. ALL COSTS FOR FAILING TESTS WILL BE DEDUCTED FROM THE CONTRACTOR'S PAYMENT REQUEST(S).

CONSTRUCTION WORK LIMITS

1. NO CONSTRUCTION ACTIVITIES SHALL TAKE PLACE OUTSIDE OF THE SHOWN WORK LIMITS, EXCEPT FOR ACCESS WITHIN EXISTING ACCESS ROUTES.
2. ALL EXISTING FENCE WITHIN THE CONSTRUCTION WORK LIMITS SHALL BE REMOVED, SALVAGED, AND REPLACED AS DIRECTED BY THE OWNER.
3. ANY FENCE DAMAGED DURING REMOVAL SHALL BE REPLACED AT THE CONTRACTOR'S EXPENSE.

BASIS of BEARING & BENCHMARK

BASIS OF BEARING: THE NORTH LINE OF THE NORTHWEST 1/4 OF SECTION 26, TOWNSHIP 2 NORTH, RANGE 64 WEST OF THE 6TH P.M., IN WELD COUNTY, COLORADO IS ASSUMED TO BEAR SOUTH 89°59'30" EAST, AS MONUMENTED HEREON, WITH ALL BEARINGS CONTAINED HEREON RELATIVE THERETO.

PROJECT BENCHMARK: COLORADO DEPARTMENT OF TRANSPORTATION CONTROL POINT "CP 3892 / MP 38.92" 3 1/4" ALUMINUM CAP IN THE WEST CENTER MEDIAN OF INTERSTATE 76 AT KEENSBURG EXIT. ELEVATION 1523.411 METERS OR 4998.07 FEET (NAVD 1988).

SITE BENCHMARK: WAS ESTABLISHED BEING A 3" BRASS CAP IN CONCRETE LYING FIVE FEET WEST OF A CONCRETE IRRIGATION DITCH NEAR THE INTERSECTION OF COUNTY ROAD 18 AND NORTH CEDAR STREET, AND THIRTY FEET NORTH OF THE CENTERLINE OF COUNTY ROAD 18. STAMPED "NATIONAL GEODETIC SURVEY ACD 1" HAVING AN ELEVATION OF 5008.06 FEET (NAVD 1988)

SURVEY CONSTRUCTION NOTES:

1. PROJECT HORIZONTAL & VERTICAL CONTROL AND CONTROL NOTES ARE SHOWN ON THE HORIZONTAL BASELINE CONTROL SHEET OF THIS PLAN SET.
2. ALL PROPERTY PINS OR SURVEY MONUMENTS DISTURBED DURING CONSTRUCTION SHALL BE REPLACED BY A LICENSED SURVEYOR AT THE CONTRACTOR'S EXPENSE. THIS SHALL INCLUDE A SURVEY PLAT IF REQUIRED BY LAW.
3. IT IS THE CONTRACTOR'S RESPONSIBILITY TO FIND AND IDENTIFY ALL EXISTING SURVEY MONUMENTS WHICH MAY BE DISTURBED DURING CONSTRUCTION.
4. EXISTING HORIZONTAL AND VERTICAL CONTROL SHALL BE VERIFIED BY A PROFESSIONAL LAND SURVEYOR. THE CONTRACTOR'S SURVEYOR SHALL PROVIDE WRITTEN CONFIRMATION VERIFYING THE CONTROL IS SATISFACTORY PRIOR TO BEGINNING OF CONSTRUCTION.
5. ALL CONSTRUCTION SURVEYING SHALL MEET COLORADO STANDARD OF CARE.
6. THE CONTRACTOR SHALL FIELD SURVEY THE EXISTING GROUND SURFACE ALONG THE PROPOSED ALIGNMENT, COMPARE THE SURFACE TO THE TOPOGRAPHY AS SHOWN ON THESE PLANS AND SUBMIT IN WRITING ANY CONCLUSIONS / DISCREPANCIES BETWEEN THE SURVEYS.
7. ALL FIELD STAKING SHALL BE PERFORMED AND LABELED MATCHING THE STATIONING AND OFFSET BASELINE AS SHOWN IN THIS PLAN SET. ARBITRARY BASELINE OR STATIONING (NOT MATCHING THESE DESIGN PLANS) WILL NOT BE ALLOWED.
8. CUT-SHEETS ARE REQUIRED TO BE COPIED TO THE SPECIFIC IMPROVEMENT CONTRACTOR, OWNER AND WECI WITHIN 2 DAYS OF CONSTRUCTION STAKING.
9. ANY MONUMENTS INSTALLED FOR THIS PROJECT (NEW & REVISED) SHALL BE PER CDOT DETAIL (M-629-1).

EXISTING TOPOGRAPHY and CONTOURS

1. ALL PROFILES (THIS PLAN SET) REPRESENT A DIGITAL TERRAIN MODEL (DTM) CREATED BY WECI BASED ON FIELD SURVEY PROVIDED BY OTHERS.
2. CONTOUR LINES OF EXISTING/ORIGINAL GRADE HAVE A 2-FOOT INTERVAL ACCURACY AND ARE SHOWN FOR ILLUSTRATION ONLY.

GRADING AND COMPACTION NOTES:

1. REFERENCE THE GEOTECHNICAL REPORT PREPARED BY HIGH PLAINS ENGINEERING DATED MARCH 12, 2002.
2. ALL EXCESS SOIL MATERIALS ARE TO BE STOCKPILED AS DIRECTED BY THE OWNER or REMOVED AT THE CONTRACTOR'S EXPENSE. ALL CONCRETE, ASPHALT, AND OTHER REMOVED IMPROVEMENTS SHALL BE DISPOSED OF AT THE CONTRACTOR'S EXPENSE.
3. ALL DISTURBED AREAS SHALL BE RESTORED TO ORIGINAL CONDITION AS A MINIMUM, UNLESS OTHERWISE NOTED.
4. THE CONTRACTOR IS RESPONSIBLE FOR ALL GRADEWORK TO ENSURE POSITIVE DRAINAGE AT ALL TIMES (MATCH ORIGINAL CONDITIONS).
5. ALL BACKFILL SHALL MEET THE TYPICAL TRENCH DETAIL SPECIFICATIONS SHOWN IN THIS PLAN SET, AND PER TOWN CRITERIA.
6. ALL OTHER SOIL PLACEMENT OVER 12-inches IN THICKNESS SHALL ALSO MEET THE TYPICAL TRENCH DETAIL COMPACTION SPECIFICATIONS SHOWN IN THIS PLAN SET.
7. STRIP THE TOP 6-inches OF ALL AREAS TO BE DISTURBED DURING CONSTRUCTION, AND STOCKPILE SEPARATE FROM TRENCH SPOILS IN LOCATION(S) AS APPROVED BY PROPERTY OWNER. REPLACE STRIPPINGS ABOVE COMPLETED PIPELINES MATCHING PRE CONSTRUCTION GRADES WHERE NO PROPOSED GRADING IS SHOWN.
8. THE CONTRACTOR SHALL MEET THE PROJECT SPECIFICATIONS. IT IS THE CONTRACTOR'S RESPONSIBILITY TO CONTACT AND COORDINATE SCHEDULING THE GEOTECHNICAL TESTING FIRM IN ORDER TO MEET THE PROJECT SPECIFICATIONS AND STANDARDS.
9. FOR GRADING NOT SHOWN HERE-IN THESE PLANS, REFER TO LANDSCAPE GRADING BY OTHERS. LANDSCAPE FINAL GRADING TO BE PROVIDED BY OTHERS.
10. ROUGH GRADING VERTICAL TOLERANCES ARE ± 0.10 ft.
11. COMPACTION OF ALL HYDRANT RUN BACKFILL SHALL MEET 100% OF MAXIMUM DENSITY AND WITHIN 3% +/- OF OPTIMUM MOISTURE CONTENT AS DETERMINED BY STANDARD PROCTOR ASTM-D-698.
12. CONTRACTOR TO PROVIDE TRAFFIC CONTROL MEASURES AS REQUIRED BY TOWN STANDARDS FOR PUBLIC RIGHT OF WAY.
13. IF NECESSARY TO ACCESS OVER EXISTING IMPROVEMENTS (IE, EXISTING ROADS, SHALLOWS, UTILITIES ETC,.) THE CONTRACTOR SHALL COORDINATE WITH THE GEOTECHNICAL CONSULTANT REGARDING PROTECTION AGAINST CONSTRUCTION TRAFFIC LOADS.

EROSION CONTROL & STORM WATER MANAGEMENT PLAN

1. ALL EROSION CONTROL MEASURES MUST BE INSTALLED PER URBAN DRAINAGE FLOOD CONTROL DISTRICT (UDFCD) REQUIREMENTS (UNLESS OTHERWISE SHOWN HEREIN), AND ALSO STATE SWMP PERMIT REQUIREMENTS.
2. ALL DISTURBED AREAS (i.e. CONSTRUCTION WORK LIMITS) SHALL BE ENCLOSED BY SILT FENCE IF POTENTIAL FOR RUNOFF EXISTS.
3. INSTALL VEHICLE TRACKING CONTROL AT ALL ACCESS ROAD LOCATIONS ADJACENT TO ALL ENTRANCES / EXITS TO & FROM THE SITE.
4. SEE EROSION PROTECTION DETAILS AS SHOWN ON DRAWINGS.
5. IT IS THE CONTRACTOR'S RESPONSIBILITY TO MAINTAIN (IE, SEASONAL SEEDING, MATERIALS, ETC.) ANY AND ALL EROSION PROTECTION NECESSARY UNTIL FINAL ACCEPTANCE OR ONCE SEEDING IS ESTABLISHED, WHICHEVER COMES FIRST.
6. THE CONTRACTOR SHALL PROVIDE SWEEPING AS NECESSARY TO KEEP PRIVATE AND PUBLIC ROADWAYS CLEAN OF DEBRIS.

SEEDING

1. ALL SEEDING SHALL BE PER TOWN PARKS & RECREATION DESIGN STANDARDS AND AS ACCEPTABLE TO THE PROPERTY OWNER.

ADJACENT DITCH or LATERAL WORK

1. NO WORK SHALL COMMENCE WITHIN 15-feet OF ANY DITCH or LATERAL TOP OF BANK EXCEPT AT THOSE CROSSING LOCATIONS AS NOTED ON THE PLANS UNLESS OTHERWISE APPROVED BY THE OWNER AND APPROPRIATE DITCH COMPANY.
2. ALL WORK WITHIN 15-feet OF ANY DITCH OR LATERAL TOP OF BANK SHALL MEET ALL REQUIREMENTS AND SPECIFICATIONS PER THE DITCH CROSSING PERMIT.
3. CONTACT OWNER/WECI FOR ANY DITCH RELATED ISSUES.

ELECTRIC AND COMMUNICATION CONDUIT CONSTRUCTION NOTES:

1. SEE ALSO ELECTRICAL PLANS FOR ELECTRIC AND COMMUNICATION DESIGN AND SPECIFICATIONS - BY OTHERS.

RELOCATION OF EXISTING LIGHT POLES AND EQUIPMENT

1. SEE ALSO ELECTRICAL PLANS FOR REMOVAL, SALVAGE, AND RE-INSTALLATION OF EXISTING LIGHT POLES AND EXISTING SECURITY IMPROVEMENTS - BY OTHERS.

RAW WATERLINE CONSTRUCTION NOTES:

1. ~~RAW WATERLINE PIPE SHALL BE RIGID POLYVINYL CHLORIDE (PVC) ASTM D3034 (< 15") OR ASTM 679 (≥ 15") WITH WALL THICKNESS SDR 35, ADS N-12 SMOOTH INTERIOR, OR AS APPROVED BY THE ENGINEER.~~
2. ~~ALL LENGTHS SHOWN ON THE PLANS ARE FROM END TO END OR PI TO PI.~~
3. ~~THE CONTRACTOR SHALL INSTALL TEMPORARY PLUGS (IF NECESSARY) AT EXISTING HEAD GATES AND SHALL REMAIN IN PLACE UNTIL CONSTRUCTION ACCEPTANCE IS ISSUED, AT WHICH TIME THEY SHALL BE REMOVED BY THE CONTRACTOR.~~
4. ~~INSTALL MARKER POSTS IN NON-FARMABLE AREAS OR PERMANENT SURVEY MONUMENTS IN EXISTING CONCRETE STRUCTURES WITHIN 2.0-feet OF PIPELINE BEND LOCATIONS (ALONG THE PIPE CENTERLINE NOT OFFSET).~~
5. ~~RAW WATERLINE PIPE SHALL BE AIR TESTED AT 4 psig OR AS APPROVED BY THE ENGINEER (SHALL DEPEND UPON PIPE MATERIAL USED).~~

STORM SEWER CONSTRUCTION NOTES:

1. ALL STORM SEWER PIPE TO BE A.S.T.M. C-76, CLASS III REINFORCED CONCRETE PIPE WITH RUBBER GASKETS MEETING AASHTO M-170 REQUIREMENTS. UNLESS OTHERWISE NOTED.
2. STORM SEWER MANHOLES SHALL BE 4 FEET DIAMETER FOR 30 INCH PIPE OR LESS, 5 FEET DIAMETER FOR 36 INCH PIPE. FOR SIZES ABOVE 36 INCH, CONCRETE JUNCTION BOXES, OR PRECAST MANHOLE TEES, WILL BE DETAILED BY THE ENGINEER.
3. ALL ROADWAY STORM SEWER INLETS ARE CDOT TYPE R CURB INLETS, UNLESS OTHERWISE NOTED. THE PROPOSED POND STORM SEWER OUTLET IS CDOT TYPE C.
4. ALL STORM SEWER MANHOLE AND INLET LIDS SHALL BE LABELED ~~PER TOWN STANDARDS INCLUDING THE FOLLOWING CONFINED SPACE INFORMATION~~ "STORM SEWER, ~~CAUTION CONFINED SPACE, ENTRY PERMIT REQUIRED," (TO BE COORDINATED WITH TOWN INSPECTOR).~~
5. MANHOLE AND INLET LID LOCATION TO BE COORDINATED WITH TOWN INSPECTOR.
6. A MINIMUM OF 2.0 FEET OF COVER OVER THE TOP OF THE STORM SEWER LINES SHALL BE MAINTAINED UNLESS OTHERWISE NOTED.
7. A MINIMUM VERTICAL SEPARATION OF 18" SHALL BE MAINTAINED AT ALL CROSSINGS UNLESS OTHERWISE NOTED.
8. ALL LENGTHS OF STORM SEWER LINES SHOWN ON THE PLANS ARE MEASURED HORIZONTALLY FROM CENTER TO CENTER OF ALL STRUCTURES, MANHOLES, BENDS, TEES, AND INLETS UNLESS OTHERWISE NOTED.
9. STORM SEWER SHALL BE AIR TESTED AT 4 psig. CONCRETE MANHOLES SHALL BE TESTED PER MANHOLE LEAKAGE TEST.
10. ALL STORM SEWER PIPE SHALL BE LEFT SMOOTH, CLEAN, AND FREE OF OBSTRUCTIONS THROUGHOUT THE ENTIRE ALIGNMENT.
11. PIPE, BENDS, TEES, AND ALL ACCESSORIES ARE TO BE SUPPLIED BY THE SAME SUPPLIER.
12. EXCAVATION SHALL BE DEWATERED AS NECESSARY TO EXCAVATE AND PLACE PIPE WITHIN DRY TRENCH.
13. ALL INSTALLED STORM PIPING IS REQUIRED TO BE WATER JETTED CLEAN TWO WEEKS PRIOR TO THE FINAL ACCEPTANCE WALK THRU.
14. ALL STORM PIPING THIS PROJECT "PRIVATE" UNLESS OTHERWISE NOTED.

STORM DRAINAGE MAINTENANCE

1. IT IS THE RESPONSIBILITY OF THE CONTRACTOR TO PERFORM EROSION AND SEDIMENT CONTROL MEASURES (INCLUDING PLANTINGS) AND TO MAINTAIN CONSTRUCTED DRAINAGE FACILITIES THROUGH THE CONSTRUCTION PROCESS IN A MANNER THAT PRESERVES THE INTENDED FUNCTION AND LIFE OF THE FACILITIES.

SANITARY SEWER CONSTRUCTION NOTES:

1. SEWER PIPE SHALL BE RIGID POLYVINYL CHLORIDE (PVC) ASTM D3034 (< 15") OR ASTM 679 (≥ 15") WITH WALL THICKNESS SDR 35 (SDR 26 FOR DEPTHS ≥ 20').
2. ALL LENGTHS OF SEWER LINE SHOWN ON THE MASTER UTILITY PLAN ARE FROM THE CENTER OF MANHOLE TO THE CENTER OF MANHOLE.
3. THE CONTRACTOR SHALL INSTALL TEMPORARY PLUGS IN THE MANHOLES AT THE POINTS OF CONNECTION TO THE EXISTING SEWER SYSTEMS. PLUGS SHALL REMAIN IN PLACE UNTIL CONSTRUCTION ACCEPTANCE IS ISSUED, AT WHICH TIME THEY SHALL BE REMOVED BY THE CONTRACTOR.
4. INSTALL MARKER POSTS IN LANDSCAPE AREAS OR PERMANENT SURVEY MONUMENTS IN EXISTING PAVED SURFACES WITHIN 2.0-feet OF EVERY MANHOLE and STUB LOCATION (ALONG THE PIPE CENTERLINE NOT OFFSET).

STREET CONSTRUCTION NOTES:

1. ALL STREET IMPROVEMENTS TO BE COMPLETED PER CDOT CONSTRUCTION STANDARDS & SPECIFICATIONS.
2. HANDICAP RAMPS ARE TO BE FORMED AT ALL INTERSECTIONS.

ASPHALT NOTES:

1. REFERENCE THE "SOILS AND FOUNDATION INVESTIGATION PROPOSED CONSTRUCTION MARKET AND CEDAR STREET KEENESBURG, COLORADO" PREPARED BY INTEC DATED OCTOBER 31, 2006
2. FULL ASPHALT DESIGN
   PAVEMENT DESIGN ALTERNATIVES
   - A. 4 INCHES H.B.P. PLUS 12 INCHES OF CLASS 6 ROAD BASE.
   - B. 6 INCHES H.B.P. PLUS 8 INCHES OF CLASS 6 ROAD BASE.
   - C. 5 INCHES PORTLAND CEMENT CONCRETE PLUS 8 INCHES OF CLASS 6 ROAD BASE.

   ALL OPTIONS MUST HAVE TWO FEET OF OVEREXCAVATION AND RECOMPACTION OF NATIVE SOIL UNDER THE AGGREGATE BASE COURSE. SEE ALSO GEOTECHNICAL STUDY BY OTHERS AS NOTED IN NOTE #1.
3. ALL ROADWAY CONSTRUCTION SHALL MEET TOWN COLLECTOR STANDARDS.

STRIPING NOTES:

1. ALL STANDARD PARKING STALL STRIPING DIMENSIONS ARE 9.0 FEET WIDE BY 18.0 FEET LONG UNLESS OTHERWISE NOTED.
2. ALL STRIPING THIS PROJECT TO BE WHITE UNLESS OTHERWISE NOTED.
3. ALL HANDICAP STALLS TO BE SIGNED & STRIPED PER ADA SPECIFICATIONS, USE BLUE & WHITE SYMBOLOGY, VAN DENOTES VAN ACCESSIBLE STALLS, STD DENOTES STANDARD ACCESSIBLE STALLS.
4. STRIPING MATERIAL TO BE EPOXY FOR LONG LINES AND PRE-FORMED THERMO PLASTIC FOR ARROW LEGENDS.
5. ALL STRIPING SHALL COMPLY WITH THE MANUAL ON UNIFORM TRAFFIC CONTROL DEVICES.
6. REMOVAL OF EXISTING STRIPING WHICH CONFLICTS WITH THE NEW STRIPING DESIGN WILL BE REQUIRED. PAVEMENT MARKING REMOVAL AND INSTALLATION WILL BE THE RESPONSIBILITY OF THE DEVELOPER/CONTRACTOR.
7. LAYOUT OF STRIPING IN THE FIELD WILL REQUIRE APPROVAL BY THE TOWN of KEENESBURG PRIOR TO APPLICATION OF FINAL STRIPING.

FIRELINE and WATERLINE CONSTRUCTION NOTES:

1. A MINIMUM OF 4.5 FEET OF COVER OVER THE TOP OF THE WATER LINES IS TO BE MAINTAINED. (5'-0" MINIMUM OF COVER FOR FIRE PROTECTION LINES.)
2. A MINIMUM VERTICAL SEPARATION OF 18" SHALL BE MAINTAINED AT ALL CROSSINGS, UNLESS OTHERWISE NOTED.
3. ALL LENGTHS OF WATER LINE AND FIRE PROTECTION LINES SHOWN ON THE PLANS ARE MEASURED HORIZONTALLY FROM CENTER TO CENTER OF ALL VALVES, FITTINGS, BENDS, TEES, etc. VERTICAL RISERS ARE MEASURED VERTICALLY.
4. P.V.C. FIRE PROTECTION LINES TO BE AWWA C-900, CLASS 200. D.I.P. FIRE PROTECTION LINES and FITTINGS to be PRESSURE CLASS 350 and COMPLY WITH AWWA C-110. ALL PIPELINE APPURTENANCES SHALL BE OF SIMILAR METALS (NO DISSIMILAR METALS).
5. TAPPING SADDLES TO BE USED ONLY FOR TEMPORARY BLOW OFFS.
   - A) ALL TEMPORARY BLOW OFF TAPPING SADDLES SHALL BE BRASS.
   - B) ALL TEES SHALL BE SWIVEL TEES.
6. FIRE PROTECTION AND WATER LINES SHALL BE HYDROSTATICALLY TESTED AT 150 psi FOR 2 HOURS.
7. ALL WATER LINES, INCLUDING FIRE LINES, ARE TO BE DISINFECTED AND PRESSURE TESTED PER TOWN STANDARDS.
8. TEMPORARY TAP(S) SHALL BE INSTALLED AS REQUIRED TO FLUSH AND TEST THE LINE. THE TAPPING SADDLE SHALL BE PLUGGED WITH A BRASS PLUG UPON COMPLETION.
9. THE TOWN WATER DEPARTMENT INSPECTOR SHALL BE NOTIFIED PRIOR TO BACK- FILLING AND TESTING (DISINFECTION AND HYDROSTATIC).
10. PIPE, FITTINGS, BOLTS, WASHERS, NUTS AND ALL ACCESSORIES ARE TO BE SUPPLIED BY THE SAME MANUFACTURER.
11. EXCAVATION SHALL BE DEWATERED AS NECESSARY TO EXCAVATE AND PLACE PIPE WITHIN DRY TRENCH.
12. ~~CLAY CUT-OFF WALLS SHALL BE INSTALLED WITHIN 10-feet OF EVERY BRANCH OF A TEE, BEND, CROSS, MANHOLE. OR PHASE ENDING. THE DISTANCE BETWEEN CLAY CUT-OFF WALLS BETWEEN FITTINGS SHALL NOT EXCEED 400 FEET ON ANY LINE.~~
13. INSTALL MARKER POSTS IN LANDSCAPE AREAS OR PERMANENT SURVEY MONUMENT IN EXISTING PAVED SURFACES ABOVE ALL HORIZONTAL BENDS AND STUB LOCATIONS.
14. ALL NEW HYDRANTS SHALL BE MUELLER.

FIRELINE and WATERLINE RESTRAINT NOTES:

1. BOTH THRUST BLOCKS AND MEGALUG RESTRAINTS (ALL JOINTS AND FITTINGS) ARE REQUIRED. NEW PIPING AND FITTINGS SHALL BE CONTINUOUSLY CONNECTED WITH MEGALUGS. ALL THRUST RESTRAINT CONCRETE SHALL BE 28 DAY COMPRESSIVE STRENGTH ≥ 3,500 p.s.i.
2. ALL MECHANICAL JOINTS SHALL BE RESTRAINED USING MEGALUG SERIES 2000 PV (NEW JOINTS) OR 2000 SV (SPLIT VERSION) FOR EXISTING JOINTS (TIE- INTO EXISTING SYSTEM) OR UNI-FLANGE SERIES UFR 1300 C-"dia" OR APPROVED EQUAL.
3. ALL PUSH-ON JOINTS SHALL BE RESTRAINED USING MEGALUG SERIES 1600 OR UNI-FLANGE SERIES 1390-C-"dia" OR APPROVED EQUAL.
4. CONNECTION TO AN EXISTING SYSTEM WITH A NEW GATE VALVE SHALL BE RESTRAINED ON EACH SIDE.
5. ANY EXISTING UNRESTRAINED FIRELINE JOINTS/FITTINGS EXPOSED DURING CONSTRUCTION SHALL BE RESTRAINED USING THE APPROPRIATE MEGALUG SERIES.
6. TO INSTALL MEGALUG TO EXISTING MECHANICAL JOINT FITTINGS AND VALVES, REMOVE BOLTS AND SLIDE EXISTING RETAINER GLAND AWAY FROM FITTING. INSTALL MEGALUG SERIES 2000 PER MANUFACTURER'S SPECIFICATIONS. DO NOT ATTEMPT TO REMOVE THE EXISTING FOLLOWER GLAND.
7. EXISTING THRUST BLOCKS THAT ARE DISTURBED DURING THE CONSTRUCTION OF THE NEW FIRE PROTECTION LINE SHALL BE REINSTALLED (USING FORMS IF NECESSARY TO CREATE BLOCKING THAT WILL BEAR ON UNDISTURBED SOIL).

SUPPLEMENTAL SPECIAL CONDITIONS

1. ALL POINTS OF CONNECTION TO ANY EXISTING PIPE AND ALL EXISTING UTILITY CROSSINGS SHALL BE POTHOLED AND THE LOCATION, ELEVATION, PIPE MATERIAL, PIPE DIAMETER, AND ANY OTHER EXISTING INFORMATION SHALL BE NOTED AND FORWARDED TO WECI PRIOR TO ORDERING MATERIALS WHICH DEPEND ON THIS INFORMATION. ALL POTHOLE LOCATIONS ARE SHOWN ON THE PLANS.
2. FOLLOWING SUCCESSFUL PRESSURE TESTING, ALL NEWLY PLACED PIPE SHALL BE LOCATED USING NEW TRACING WIRE AND SURVEYED BY THE CONTRACTOR AS ADDITIONAL AS-BUILT INFORMATION.
3. WEEKLY PROGRESS MEETINGS WILL BE HELD. PROJECT ENGINEER, CONTRACTOR SUPERINTENDENT (SITE SUPERINTENDENT), SUBCONTRACTORS AND OWNER SHALL ATTEND.
4. ALL ADJACENT PROPERTY OWNER RELATIONS & CORRESPONDENCE MUST BE ROUTED THROUGH AND APPROVED BY THE OWNER.
5. ALL PROPOSED PIPE INSTALLATION SHALL BE WITH FULL LENGTHS OF PIPE. NO SHORT OR CUT PIPE SHALL BE INSTALLED UNLESS OTHERWISE APPROVED AND SHOWN ON THE PLANS (i.e. CLOSURE PIECES, FABRICATED BEND LOCATIONS AND AT MANHOLES).

PERMITS

PERMITS	OBTAINED BY
~~BUILDING PERMIT~~	~~OWNER / SUBCONTRACTOR~~
STATE GROUNDWATER DISCHARGE PERMIT	OWNER / WECI SUBCONTRACTOR
~~NATIONAL PERMIT~~	~~OWNER~~
KEENESBURG GRADING PERMIT	OWNER or CONTRACTOR
KEENESBURG BUILDING PERMIT	OWNER or CONTRACTOR
STORM WATER MANAGEMENT PLAN	OWNER or CONTRACTOR

REQUIRED SUBMITTALS

1. ALL CATALOG CUT SHEETS FOR ALL IMPROVEMENTS, GRADATIONS, MIX DESIGNS, PROCTOR TESTS, TACK COATS, etc. ARE REQUIRED SUBMITTALS AND MUST BE APPROVED BY ENGINEER AND SUBMITTED TO THE TOWN.
2. ALL PROPOSED IMPROVEMENT MATERIALS AS APPROVED BY THE ENGINEER SHALL BE SUBMITTED TO THE TOWN. (MATERIAL SPECIFICATIONS AND PRODUCT DATA SHEETS ONLY).

PROJECT CLOSE OUT

1. IT IS THE RESPONSIBILITY OF THE CONSTRUCTION CONTRACTOR TO PERFORM EROSION CONTROL MEASURES (INCLUDING PLANTINGS) AND TO MAINTAIN CONSTRUCTION FACILITIES THROUGH THE CONSTRUCTION PROCESS IN A MANNER THAT PRESERVES THE INTENDED FUNCTION AND LIFE OF THE FACILITIES.
2. IT IS THE RESPONSIBILITY OF THE CONSTRUCTION CONTRACTOR TO OBTAIN FINAL ACCEPTANCE FROM THE TOWN AFTER WHICH THE 1-YEAR WARRANTY PERIOD REGARDING ANY PUBLIC IMPROVEMENTS AND RELATED CONSTRUCTION WILL BEGIN.

ADA NOTES:

1. ALL HANDICAP PARKING STALLS, RAMPS, AND ROUTES SHALL MEET CURRENT ADA STANDARDS.

INSTALLATION OF ALL WATER AND SEWER SHALL COMPLY WITH TOWN OF KEENESBURG WATER & SANITARY SEWER STANDARDS.

127 S. DENVER AVE
FT. LUPTON, CO 80621
www.westerneci.com
email@westerneci.com
(720) 685-9951
FAX (720) 294-1330
Western Engineering Consultants, inc LLC

No.	REVISION	DATE	BY
0	PRELIM/FINAL PLAT SUBMITTAL	08/06/19	CFC

KEENE LAND, LLC,
CONTACT: RICK ROBERTSON
8537 WCR 51
KEENESBURG, CO 80643
(303)961-0031

GENERAL NOTES & SPECIFICATIONS
MARKET STREET BUSINESS PARK SUBDIVISION
TOWN of KEENESBURG, WELD COUNTY, COLORADO

Dig Safely.
CALL UNCC
THREE WORKING DAYS BEFORE YOU DIG
811
www.uncc.org
UTILITY NOTIFICATION CENTER OF COLORADO

COLORADO REGISTERED
CHADWIN F. COX
FOR 33802
REVIEW ONLY
08/06/19
PROFESSIONAL ENGINEER
ONLY VALID FOR CONSTRUCTION IF SEAL & ORIGINAL SIGNATURE ARE ON EACH SHEET

INITIAL PLAN RELEASE: 08/06/19
DESIGNED BY: CFC
DRAWN BY: CFC
CHECKED BY: CFC
PROJECT NO. 01-0187.003.00
DOC CON # C0.01-NOTES
SHT C0.01

T:\0187_003_00-KEENE LAND-MARKET BUS PARK\Dwg\CD\s\0187_003-WECI-CDS-0.00-1.00.dwg, C0.01-NOTES, 8/16/2019 3:29:34 PM, _DWG To PDF.pc3, WEC 24"36, WEC 24"36

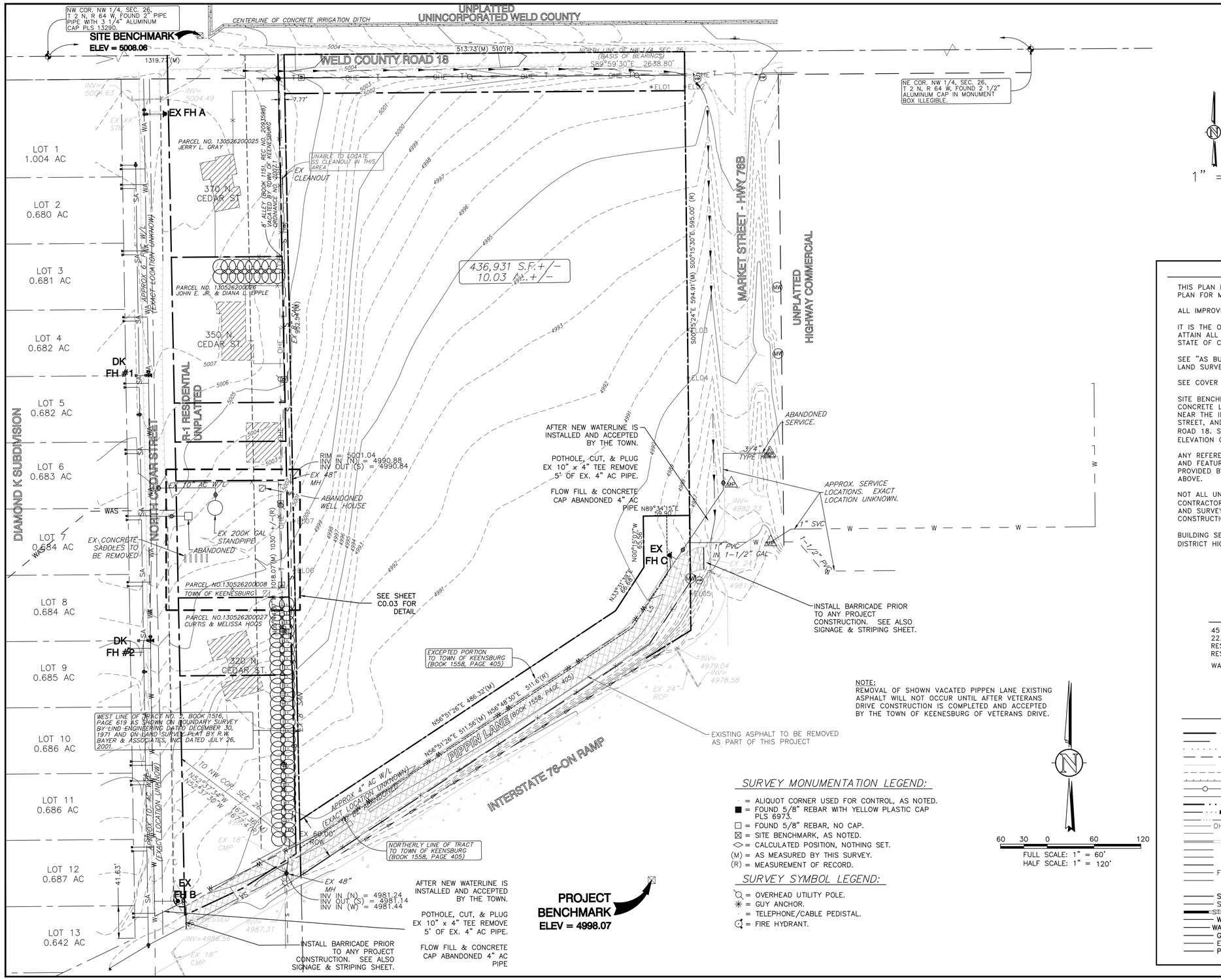

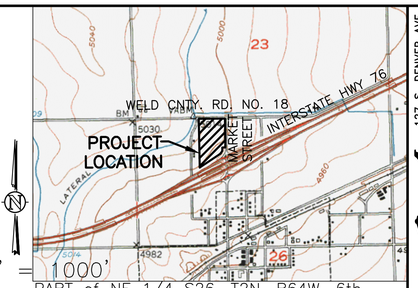

PART of NE 1/4 S26, T2N, R64W, 6th PM

SHOWN VICINITY MAP TAKEN FROM USGS QUAD – KEENESBURG 40104–A5

NOTES

THIS PLAN IS INTENDED AS THE EXISTING CONDITIONS & DEMOLITION PLAN FOR MARKET STREET BUSINESS PARK SUBDIVISION.

ALL IMPROVEMENTS ARE EXISTING UNLESS NOTED AS PROPOSED.

IT IS THE OWNER AND/OR THE CONTRACTOR'S RESPONSIBILITY TO ATTAIN ALL APPROPRIATE PERMITS AND REVIEW APPROVALS FROM THE STATE OF COLORADO AND TOWN OF KEENESBURG RESPECTIVELY.

SEE "AS BUILT/BOUNDARY SURVEY" COMPLETED BY AMERICAN WEST LAND SURVEY – DATED MAY 24, 2006.

SEE COVER SHEET FOR PROJECT BENCHMARK AND BASIS OF BEARING.

SITE BENCHMARK WAS ESTABLISHED BEING A 3" BRASS CAP IN CONCRETE LYING FIVE FEET WEST OF A CONCRETE IRRIGATION DITCH NEAR THE INTERSECTION OF COUNTY ROAD 18 AND NORTH CEDAR STREET, AND THIRTY FEET NORTH OF THE CENTERLINE OF COUNTY ROAD 18. STAMPED "NATIONAL GEODETIC SURVEY ACD 1" HAVING AN ELEVATION OF 5008.06 FEET (NAVD 1988)

ANY REFERENCE TO EASEMENTS, SURVEY POINTS, OR EXISTING UTILITIES AND FEATURES ARE BASED SOLELY FROM SURVEY INFORMATION PROVIDED BY OTHERS – SPECIFICALLY PER SAME SURVEY NOTED ABOVE.

NOT ALL UNCC UTILITY LOCATES HAVE BEEN PERFORMED. IT IS THE CONTRACTOR'S RESPONSIBILITY TO VERIFY ALL UTILITIES ARE LOCATED AND SURVEY PROVIDED TO THE OWNER AND ENGINEER PRIOR TO CONSTRUCTION DRAWING RELEASE.

BUILDING SETBACKS FRONT/REAR = 25', SIDES = 10' PER ZONE DISTRICT HIGHWAY COMMERICAL (CH).

SYMBOL LEGEND

- 45 DEG BEND
- 22.5 DEG BEND
- RESTRAINED PLUG
- RESTRAINED TEE
- WATER METER
- RESTRAINED CROSS
- FIRE HYDRANT
- RESTRAINED WATER VALVE
- PIPE CROSSOVER
- MANHOLE
- PROPOSED ASPHALT PAVING

LINETYPE LEGEND

- LOT / PROPERTY LINE
- RIGHT OF WAY LINE
- SETBACK
- EASEMENT
- TO BE ABANDONED LOT LINE
- EXISTING BUILDING, CURB
- EDGE of ASPHALT
- CHAINLINK FENCE
- WIRE FENCE
- POND WQ W/S
- SWALE
- EXISTING SWALE
- EXISTING OVERHEAD ELEC
- EXISTING ELECTICAL LINE
- EXISTING STORM LINE
- EXISTING SANITARY LINE
- EXISTING WATER LINE
- EXISTING GAS LINE
- EXISTING FIBER OPTIC LINE
- EXISTING TELEPHONE LINE
- PROPOSED SANITARY LINE
- PROPOSED SANITARY SERVICE
- PROPOSED STORM LINE
- PROPOSED WATER LINE
- PROPOSED WATER SERVICE
- PROPOSED GAS LINE
- PROPOSED ELECTRIC LINE
- PROPOSED TELEPHONE LINE

SURVEY MONUMENTATION LEGEND:

- = ALIQUOT CORNER USED FOR CONTROL, AS NOTED.
- ■ = FOUND 5/8" REBAR WITH YELLOW PLASTIC CAP PLS 6973.
- □ = FOUND 5/8" REBAR, NO CAP.
- ⊠ = SITE BENCHMARK, AS NOTED.
- ◇ = CALCULATED POSITION, NOTHING SET.
- (M) = AS MEASURED BY THIS SURVEY.
- (R) = MEASUREMENT OF RECORD.

SURVEY SYMBOL LEGEND:

- = OVERHEAD UTILITY POLE.
- = GUY ANCHOR.
- = TELEPHONE/CABLE PEDISTAL.
- = FIRE HYDRANT.

127 S. DENVER AVE
FT. LUPTON, CO 80621
www.westernec.com
email@westernec.com
(720) 685-9951
FAX (720) 294-1330
Western Engineering Consultants, inc LLC

No.	REVISION	DATE	BY
0	PRELIM/FINAL PLAT SUBMITTAL	08/06/19	CFC

KEENE LAND LLC
CONTACT: RICK ROBERTSON
8530 WARD ST
KEENESBURG, CO 80643
(303)961-0031

EXISTING CONDITIONS & DEMO PLAN
MARKET STREET BUSINESS PARK SUBDIVISION
TOWN of KEENESBURG, WELD COUNTY, COLORADO

Dig Safely.
CALL UNCC
THREE WORKING DAYS BEFORE YOU DIG
811
www.uncc.org
UTILITY NOTIFICATION CENTER OF COLORADO

COLORADO REGISTERED PROFESSIONAL ENGINEER CHRISTIN P. SEE FOR 33802 REVIEW ONLY 08/06/19
ONLY VALID FOR CONSTRUCTION IF SEAL & ORIGINAL SIGNATURE ARE ON EACH SHEET

INITIAL PLAN RELEASE: 08/06/19
DESIGNED BY: CFC
DRAWN BY: CFC
CHECKED BY: CFC
PROJECT NO. 01-0187.003.00
DOC CON # C0.02-EXCOND
SHT C0.02

T:\0187_003_00-KEENE LAND-MARKET BUS PARK\dwg\CDs\0187_003-WEC\-CDS-0.00-1.00.dwg, C0.02-EXCOND, 8/16/2019 3:29:39 PM, , DWG To PDF.pc3, WEC 24"36, WEC 24"36

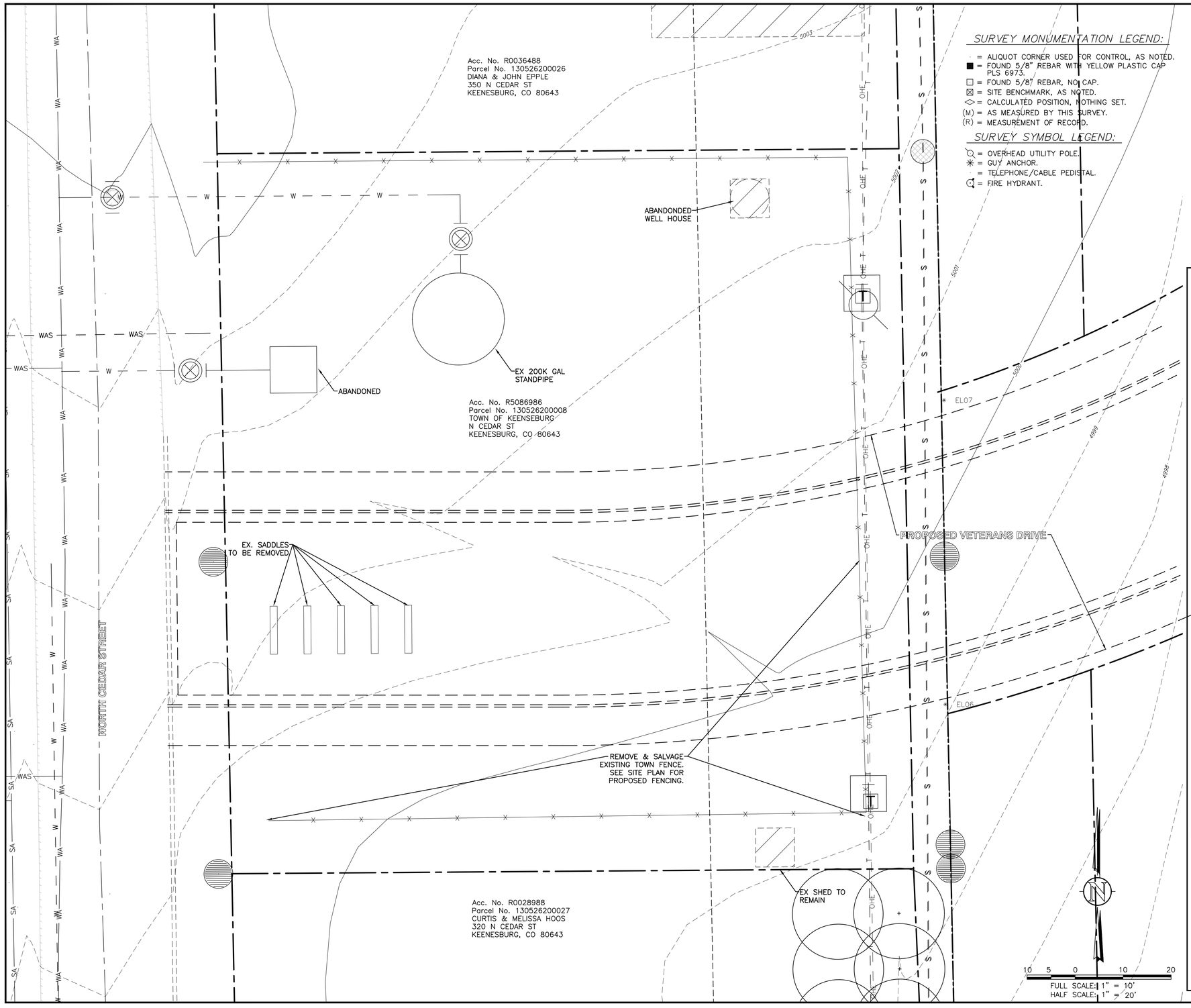

SURVEY MONUMENTATION LEGEND:

- · = ALIQUOT CORNER USED FOR CONTROL, AS NOTED.
- ■ = FOUND 5/8" REBAR WITH YELLOW PLASTIC CAP PLS 6973.
- □ = FOUND 5/8" REBAR, NO CAP.
- ⊠ = SITE BENCHMARK, AS NOTED.
- ◇ = CALCULATED POSITION, NOTHING SET.
- (M) = AS MEASURED BY THIS SURVEY.
- (R) = MEASUREMENT OF RECORD.

SURVEY SYMBOL LEGEND:

- = OVERHEAD UTILITY POLE.
- = GUY ANCHOR.
- = TELEPHONE/CABLE PEDISTAL.
- = FIRE HYDRANT.

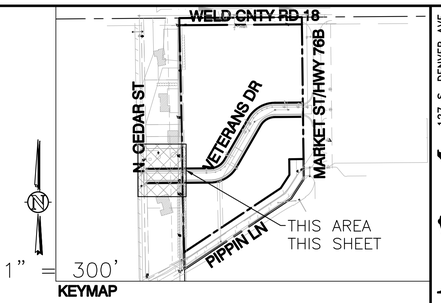

NOTES

THIS PLAN IS INTENDED AS THE DETAILED EX. CONDITIONS & DEMOLITION PLAN FOR MARKET STREET BUSINESS PARK SUBDIVISION.

ALL IMPROVEMENTS ARE EXISTING UNLESS NOTED AS PROPOSED.

IT IS THE OWNER AND/OR THE CONTRACTOR'S RESPONSIBILITY TO ATTAIN ALL APPROPRIATE PERMITS AND REVIEW APPROVALS FROM THE STATE OF COLORADO AND TOWN OF KEENESBURG RESPECTIVELY.

SEE "AS BUILT/BOUNDARY SURVEY" COMPLETED BY AMERICAN WEST LAND SURVEY – DATED MAY 24, 2006.

SEE COVER SHEET FOR PROJECT BENCHMARK AND BASIS OF BEARING.

SITE BENCHMARK WAS ESTABLISHED BEING A 3" BRASS CAP IN CONCRETE LYING FIVE FEET WEST OF A CONCRETE IRRIGATION DITCH NEAR THE INTERSECTION OF COUNTY ROAD 18 AND NORTH CEDAR STREET, AND THIRTY FEET NORTH OF THE CENTERLINE OF COUNTY ROAD 18. STAMPED "NATIONAL GEODETIC SURVEY ACD 1" HAVING AN ELEVATION OF 5008.06 FEET (NAVD 1988)

ANY REFERENCE TO EASEMENTS, SURVEY POINTS, OR EXISTING UTILITIES AND FEATURES ARE BASED SOLELY FROM SURVEY INFORMATION PROVIDED BY OTHERS – SPECIFICALLY PER SAME SURVEY NOTED ABOVE.

NOT ALL UNCC UTILITY LOCATES HAVE BEEN PERFORMED. IT IS THE CONTRACTOR'S RESPONSIBILITY TO VERIFY ALL UTILITIES ARE LOCATED AND SURVEY PROVIDED TO THE OWNER AND ENGINEER PRIOR TO CONSTRUCTION DRAWING RELEASE.

BUILDING SETBACKS FRONT/REAR = 25', SIDES = 10' PER ZONE DISTRICT HIGHWAY COMMERICAL (CH).

SYMBOL LEGEND

- 45 DEG BEND
- 22.5 DEG BEND
- RESTRAINED PLUG
- RESTRAINED TEE
- WATER METER
- RESTRAINED CROSS
- FIRE HYDRANT
- RESTRAINED WATER VALVE
- PIPE CROSSOVER
- MANHOLE
- PROPOSED ASPHALT PAVING

LINETYPE LEGEND

- LOT / PROPERTY LINE
- RIGHT OF WAY LINE
- SETBACK
- EASEMENT
- TO BE ABANDONED LOT LINE
- EXISTING BUILDING, CURB
- EDGE of ASPHALT
- CHAINLINK FENCE
- WIRE FENCE
- POND WQ W/S
- SWALE
- EXISTING SWALE
- EXISTING OVERHEAD ELEC
- EXISTING ELECTICAL LINE
- EXISTING STORM LINE
- EXISTING SANITARY LINE
- EXISTING WATER LINE
- EXISTING GAS LINE
- EXISTING FIBER OPTIC LINE
- EXISTING TELEPHONE LINE
- PROPOSED SANITARY LINE
- PROPOSED SANITARY SERVICE
- PROPOSED STORM LINE
- PROPOSED WATER LINE
- PROPOSED WATER SERVICE
- PROPOSED GAS LINE
- PROPOSED ELECTRIC LINE
- PROPOSED TELEPHONE LINE

127 S. DENVER AVE
FT. LUPTON, CO 80621
www.westernec.com
email@westernec.com
(720) 685-9951
FAX (720) 294-1330
Western Engineering Consultants, inc LLC

No.	REVISION	DATE	BY
0	PRELIM/FINAL PLAT SUBMITTAL	08/06/19	CFC

KEENE LAND LLC
CONTACT: RICK ROBERTSON
853 W 5
KEENESBURG, CO 80643
(303)961-0031

DETAILED EX. CONDITIONS & DEMO PLAN
MARKET STREET BUSINESS PARK SUBDIVISION
TOWN of KEENESBURG, WELD COUNTY, COLORADO

Dig Safely.
CALL UNCC
THREE WORKING DAYS BEFORE YOU DIG
811
www.uncc.org
UTILITY NOTIFICATION CENTER OF COLORADO

COLORADO REGISTERED PROFESSIONAL ENGINEER
CHAWN P. [illegible]
FOR
33802
REVIEW ONLY
08/06/19
ONLY VALID FOR CONSTRUCTION IF SEAL & ORIGINAL SIGNATURE ARE ON EACH SHEET

INITIAL PLAN RELEASE: 08/06/19
DESIGNED BY: CFC
DRAWN BY: CFC
CHECKED BY: CFC
PROJECT NO. 01-0187.003.00
DOC CON # C0.03-EXCOND
SHT C0.03

T:\0187_003_00-KEENE LAND-MARKET BUS PARK\Dwg\CDs\0187_003-WEC\-CDS-0.00-1.00.dwg, C0.03-DTLEXCOND, 8/16/2019 3:29:45 PM, DWG To PDF.pc3, WEC 24*36, WEC 24*36, WEC 24*36

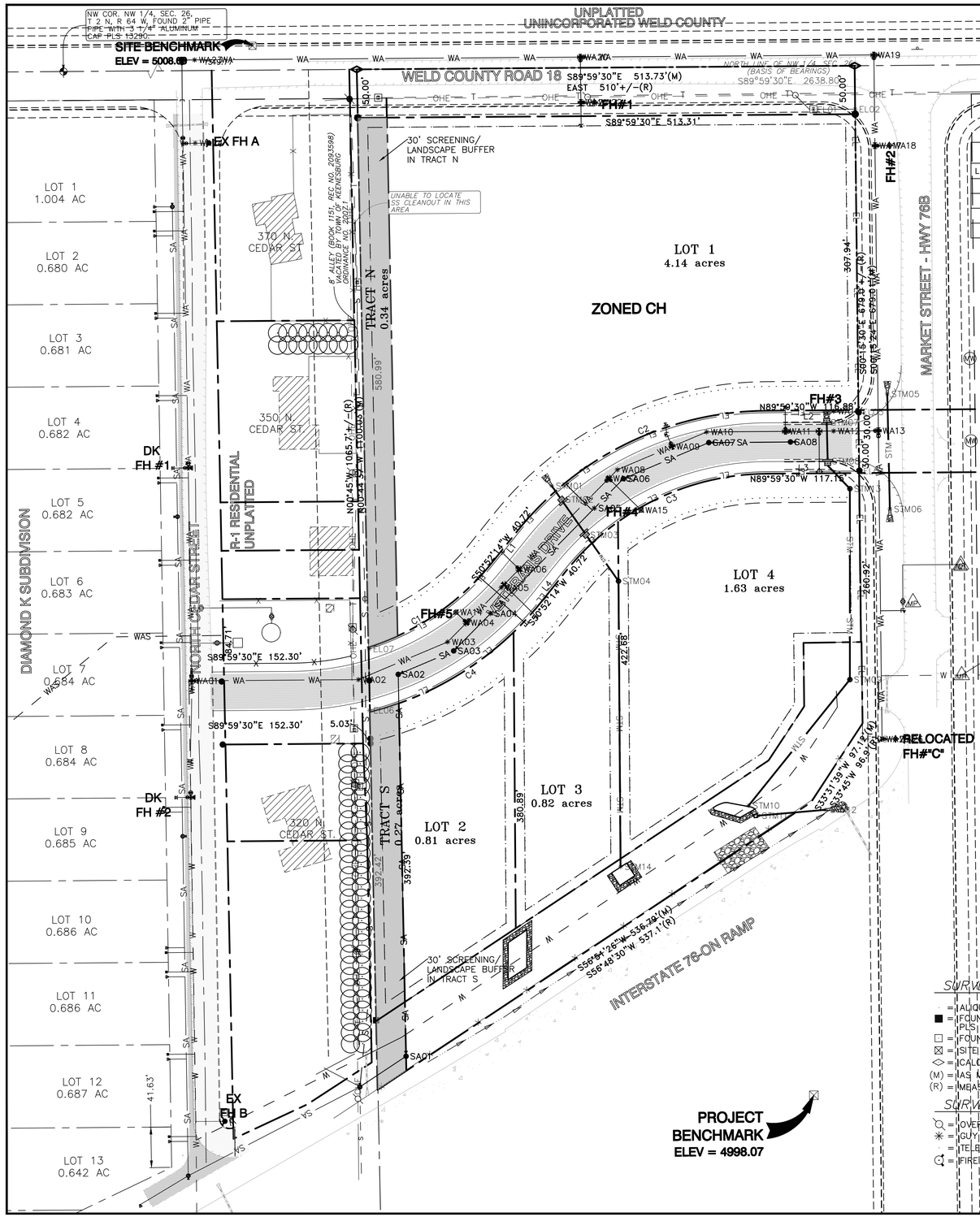

LINE TABLE		
LINE #	BEARING	DISTANCE
L1	N38°42'06"E	40.72
L2	N89°34'49"E	86.44
L3	N89°34'49"E	86.44
L4	N38°42'06"E	40.72

CURVE TABLE					
CURVE #	ARC LENGTH	RADIUS	DELTA ANGLE	CHORD BEARING	CHORD LENGTH
C1	157.93	267.50	33°49'39"	N55°36'55"E	155.65
C2	295.26	332.50	50°52'43"	N64°08'27"E	285.65
C3	237.54	267.50	50°52'43"	N64°08'27"E	229.81
C4	214.45	332.50	36°57'12"	N57°10'41"E	210.75

WATER POINT TABLE		
DESCRIPTION	NORTHING	EASTING
WA01	1286578.3558	3273895.8847
WA02	1286579.6090	3274067.9480
WA03	1286618.5664	3274160.0475
WA04	1286638.3611	3274179.5487
WA05	1286674.5592	3274215.2100
WA06	1286693.5496	3274233.9187
WA07	1286787.3613	3274326.3393
WA08	1286796.3217	3274335.1667
WA09	1286820.2124	3274391.6470
WA10	1286835.2791	3274427.2662
WA11	1286835.8775	3274508.5459
WA12	1286836.2423	3274558.3306
WA13	1286836.5791	3274604.5150
WA14	1286649.2478	3274168.5156
WA15	1286754.5875	3274359.6064
WA16	1286856.7302	3274558.1805
WA17	1287130.8568	3274600.9964
WA18	1287131.0361	3274615.9953
WA19	1287224.4962	3274599.8773
WA20	1287222.2771	3274296.9988
WA21	1287175.4609	3274297.5584
WA22	1287175.6264	3274311.4051
WA23	1287219.3605	3273898.9163
WA24	1287133.6263	3273899.5567
WA25	1286518.2618	3274608.3193
WA26	1286518.4272	3274622.1661

SANITARY POINT TABLE		
DESCRIPTION	NORTHING	EASTING
SA01	1286190.7782	3274117.1330
SA02	1286585.0596	3274109.0698
SA03	1286609.2879	3274166.3480
SA04	1286647.8386	3274204.3270
SA05	1286756.5958	3274311.4714
SA06	1286787.0431	3274341.4672
SA07	1286824.2953	3274429.5353
SA08	1286824.9501	3274513.7626

STORM POINT TABLE		
DESCRIPTION	NORTHING	EASTING
STM01	1286779.6821	3274267.4534
STM02	1286765.6064	3274277.3114
STM03	1286729.0021	3274302.9475
STM04	1286681.3321	3274336.3334
STM05	1286874.5149	3274613.7359
STM06	1286755.7096	3274616.4048
STM07	1286845.1903	3274551.2264
STM08	1286805.1851	3274552.2234
STM09	1286579.6682	3274575.1354
STM10	1286449.6226	3274470.6283
STM11	1286439.2187	3274480.0437
STM12	1286445.2420	3274550.0694
STM13	1286776.7112	3274575.1215
STM14	1286386.4449	3274338.4710

ELECTRIC POINT TABLE		
DESCRIPTION	NORTHING	EASTING
EL01	1287168.0837	3274537.5447
EL02	1287168.4411	3274580.5458
EL03	1286855.9221	3274584.2808
EL04	1286794.9259	3274585.0098
EL05	1286518.2618	3274588.3164
EL06	1286547.9122	3274079.3673
EL07	1286611.2617	3274079.0937

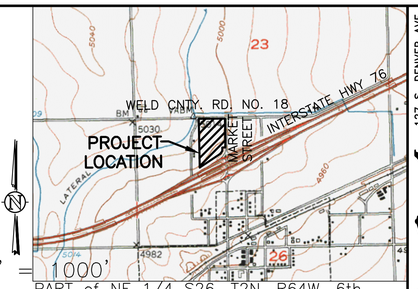

1" = 1000'

PART of NE 1/4 S26, T2N, R64W, 6th PM

SHOWN VICINITY MAP TAKEN FROM USGS QUAD – KEENESBURG 40104–A5

NOTES

THIS PLAN IS INTENDED AS HORIZONTAL CONTROL PLAN FOR MARKET STREET BUSINESS PARK SUBDIVISION.

ALL IMPROVEMENTS ARE PROPOSED UNLESS NOTED AS EXISTING.

IT IS THE OWNER AND/OR THE CONTRACTOR'S RESPONSIBILITY TO ATTAIN ALL APPROPRIATE PERMITS AND REVIEW APPROVALS FROM THE STATE OF COLORADO AND TOWN OF KEENESBURG RESPECTIVELY.

SEE "AS BUILT/BOUNDARY SURVEY" COMPLETED BY AMERICAN WEST LAND SURVEY – DATED MAY 24, 2006.

SEE COVER SHEET FOR PROJECT BENCHMARK AND BASIS OF BEARING.

SITE BENCHMARK WAS ESTABLISHED BEING A 3" BRASS CAP IN CONCRETE LYING FIVE FEET WEST OF A CONCRETE IRRIGATION DITCH NEAR THE INTERSECTION OF COUNTY ROAD 18 AND NORTH CEDAR STREET, AND THIRTY FEET NORTH OF THE CENTERLINE OF COUNTY ROAD 18. STAMPED "NATIONAL GEODETIC SURVEY ACD 1" HAVING AN ELEVATION OF 5008.06 FEET (NAVD 1988)

ANY REFERENCE TO EASEMENTS, SURVEY POINTS, OR EXISTING UTILITIES AND FEATURES ARE BASED SOLELY FROM SURVEY INFORMATION PROVIDED BY OTHERS – SPECIFICALLY PER SAME SURVEY NOTED ABOVE.

NOT ALL UNCC UTILITY LOCATES HAVE BEEN PERFORMED. IT IS THE CONTRACTOR'S RESPONSIBILITY TO VERIFY ALL UTILITIES ARE LOCATED AND SURVEY PROVIDED TO THE OWNER AND ENGINEER PRIOR TO CONSTRUCTION DRAWING RELEASE.

BUILDING SETBACKS FRONT/REAR = 25', SIDES = 10' PER ZONE DISTRICT HIGHWAY COMMERICAL (CH).

SYMBOL LEGEND

- 45 DEG BEND
- 22.5 DEG BEND
- RESTRAINED PLUG
- RESTRAINED TEE
- WATER METER
- RESTRAINED CROSS
- FIRE HYDRANT
- RESTRAINED WATER VALVE
- PIPE CROSSOVER
- MANHOLE
- EXISTING ASPHALT
- PROPOSED ASPHALT PAVING

LINETYPE LEGEND

- LOT / PROPERTY LINE
- RIGHT OF WAY LINE
- SETBACK
- EASEMENT
- TO BE ABANDONED LOT LINE
- EXISTING BUILDING, CURB
- EDGE of ASPHALT
- CHAINLINK FENCE
- WIRE FENCE
- POND WQ W/S
- SWALE
- EXISTING SWALE
- EXISTING OVERHEAD ELEC
- EXISTING ELECTICAL LINE
- EXISTING STORM LINE
- EXISTING SANITARY LINE
- EXISTING WATER LINE
- EXISTING GAS LINE
- EXISTING FIBER OPTIC LINE
- EXISTING TELEPHONE LINE
- PROPOSED SANITARY LINE
- PROPOSED SANITARY SERVICE
- PROPOSED STORM LINE
- PROPOSED WATER LINE
- PROPOSED WATER SERVICE
- PROPOSED GAS LINE
- PROPOSED ELECTRIC LINE
- PROPOSED TELEPHONE LINE

SURVEY MONUMENTATION LEGEND:

- = FALIQUOT CORNER USED FOR CONTROL, AS NOTED.
- ■ = FFOUND 5/8" REBAR WITH YELLOW PLASTIC CAP PLS 6973.
- □ = FOUND 5/8" REBAR, NO CAP.
- ⊠ = SITEI BENCHMARK, AS NOTED.
- ◇ = CALCULATED POSITION, NOTHING SET.
- (M) = MEAS MEASURED BY THIS SURVEY.
- (R) = MEASUREMENT OF RECORD.

SURVEY SYMBOL LEGEND:

- = OVERHEAD UTILITY POLE.
- = GUY ANCHOR.
- = TELEPHONE/CABLE PEDISTAL.
- = FIREI HYDRANT.

60 30 0 60 120

FULL SCALE: 1" = 60'
HALF SCALE: 1" = 120'

127 S. DENVER AVE
FT. LUPTON, CO 80621
www.westernec.com
email@westernec.com
(720) 685-9951
FAX (720) 294-1330
Western Engineering Consultants, inc LLC

No.	REVISION	DATE	BY
0	PRELIM/FINAL PLAT SUBMITTAL	08/06/19	CFC

KEENE LAND LLC
CONTACT: RICK ROBERTSON
85 S. 1400 W.
KEENESBURG, CO 80643
(303)961-0031

HORIZONTAL CONTROL PLAN
MARKET STREET BUSINESS PARK SUBDIVISION
TOWN of KEENESBURG, WELD COUNTY, COLORADO

Dig Safely.
CALL UNCC
THREE WORKING DAYS BEFORE YOU DIG
811
www.uncc.org
UTILITY NOTIFICATION CENTER OF COLORADO

COLORADO REGISTERED PROFESSIONAL ENGINEER CHARLIN F. CHON FOR 33802 REVIEW ONLY 08/06/19 ONAL ENGINEER
ONLY VALID FOR CONSTRUCTION IF SEALED, SIGNED AND DATED ARE ON EACH SHEET

INITIAL PLAN RELEASE: 08/06/19
DESIGNED BY: CFC
DRAWN BY: CFC
CHECKED BY: CFC
PROJECT NO. 01-0187.003.00
DOC CON # C0.04-HZCTRL
SHT C0.04

T:\0187_003_00-KEENE LAND-MARKET BUS PARK\Dwg\CDs\0187_003-WECI-CDS-0.00-1.00.dwg, C0.04-HOR-CONTR, 8/16/2019 3:29:51 PM, DWG To PDF.pc3, WEC 24"36, WEC 24"36

PAVEMENT DESIGN ALTERNATIVES

Traffic area	Alternative	Recommended Pavement Section Thickness (inches)			
		Aggregate Base Course (CDOT Class 6)	Plant Mixed Bituminous Pavement	Portland Cement Concrete Pavement	Total
MAIN TRAFFIC LANES	A*	12.0 inches	4.0 inches		16.0 inches
	B*	8.0 inches	6.0 inches		12.0 inches
	C*	8.0 inches		5.0 inches	11.0 inches

* ALL OPTIONS MUST HAVE TWO FEET OF OVEREXCAVATION AND RECOMPACTION OF NATIVE SOIL UNDER THE AGGREGATE BASE COURSE.

** AS TAKEN FROM THE INTEC GEOTECH REPORT TITLED "SOILS AND FOUNDATION INVESTIGATION PROPOSED CONSTRUCTION MARKET AND CEDAR STREET KEENESBURG, COLORADO" DATED OCTOBER 31, 2006.

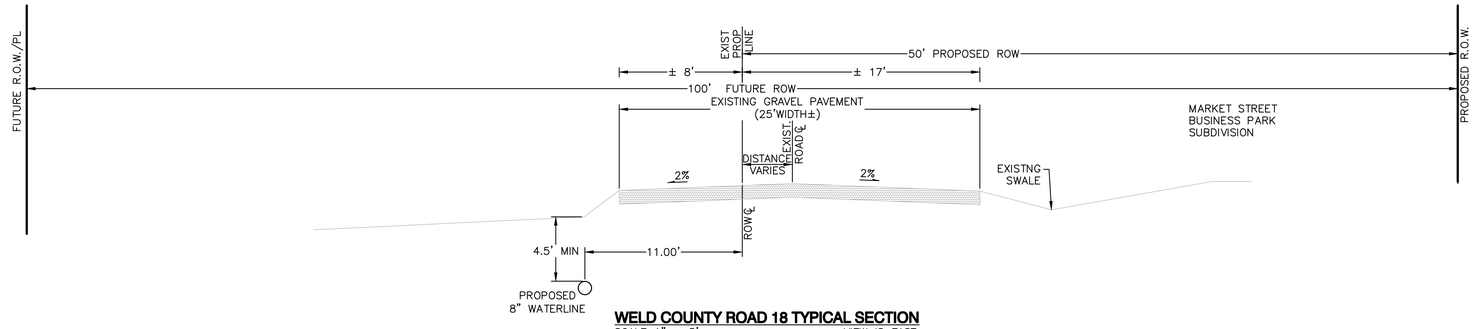

WELD COUNTY ROAD 18 TYPICAL SECTION
SCALE 1" = 5' VIEW IS EAST

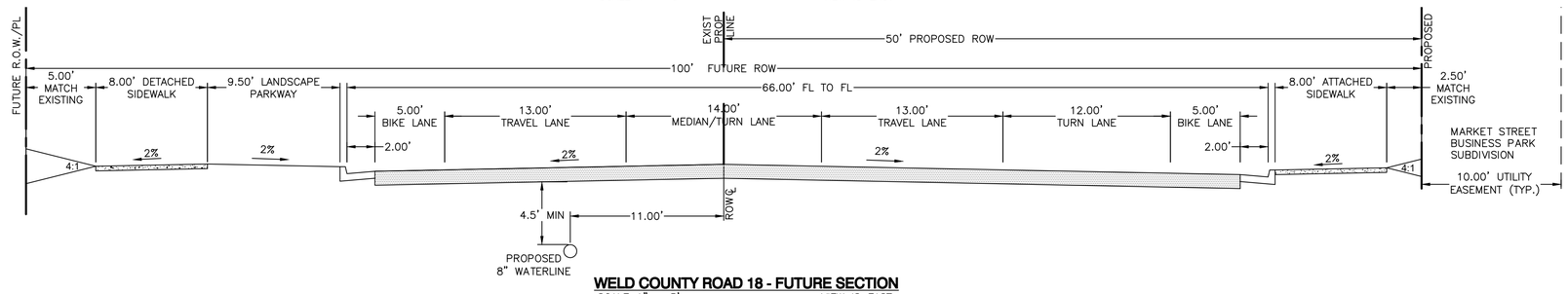

WELD COUNTY ROAD 18 - FUTURE SECTION
SCALE 1" = 5' VIEW IS EAST

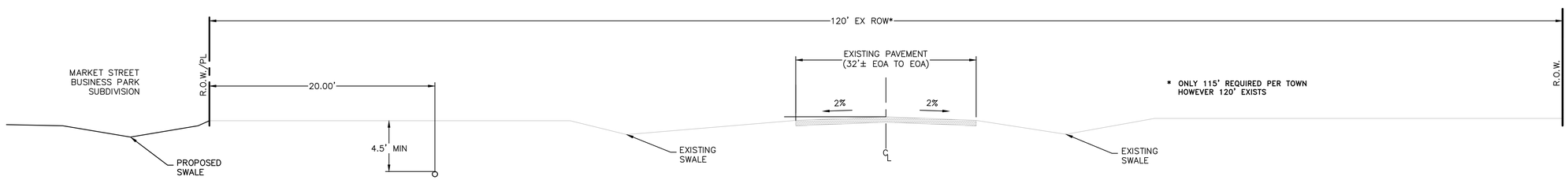

MARKET STREET - ST HWY 76B TYPICAL SECTION
SCALE 1" = 5' VIEW IS NORTH

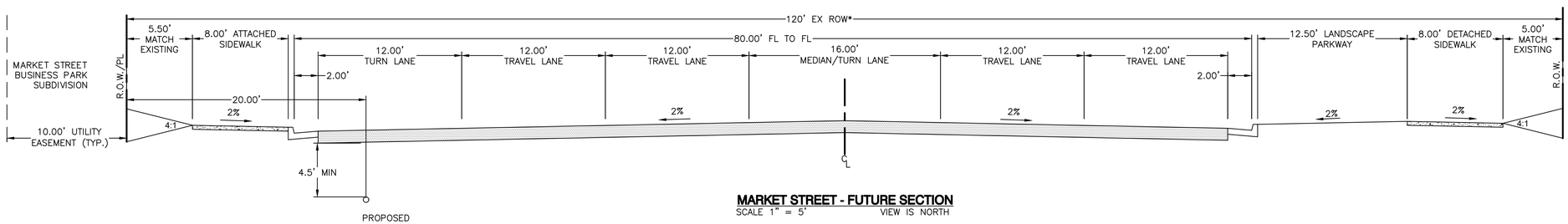

MARKET STREET - FUTURE SECTION
SCALE 1" = 5' VIEW IS NORTH

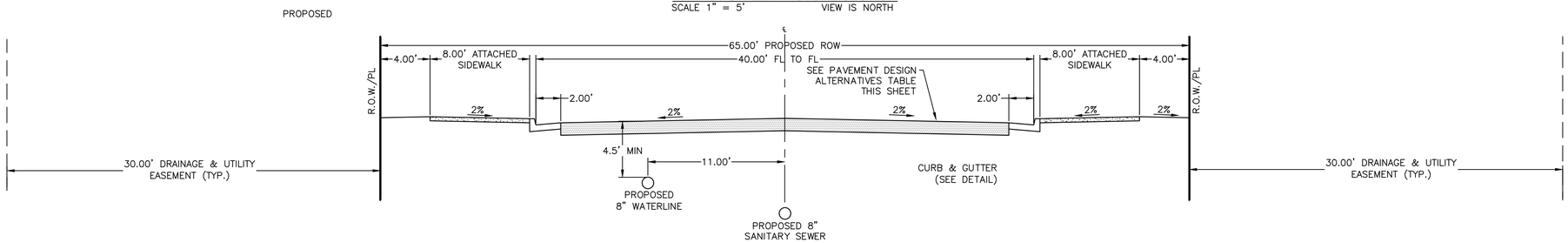

VETERANS DRIVE TYPICAL SECTION
SCALE 1" = 5' VIEW IS EAST

Western Engineering Consultants, inc LLC
127 S. DENVER AVE
FT. LUPTON, CO 80621
www.westernec.com
enoc@westernec.com
(720) 685-9951
FAX (720) 294-1330

No.	REVISION	DATE	BY
0	PRELIM/FINAL PLAT SUBMITTAL	08/06/19	CFC

KEENE LAND LLC
CONTACT: RICK ROBERTSON
853 WEST 5
KEENESBURG, CO 80643
(303)961-0031

ROAD DESIGN TYP. CROSS SECTIONS
MARKET STREET BUSINESS PARK SUBDIVISION
TOWN of KEENESBURG, WELD COUNTY, COLORADO

Dig Safely.
CALL UNCC
THREE WORKING DAYS BEFORE YOU DIG
811
www.uncc.org
UTILITY NOTIFICATION CENTER OF COLORADO

COLORADO REGISTERED PROFESSIONAL ENGINEER
CHRISTIAN F. CONRAD
FOR REVIEW ONLY
08/06/19
ONLY VALID FOR CONSTRUCTION IF SEAL & ORIGINAL SIGNATURE ARE ON EACH SHEET

INITIAL PLAN RELEASE: 08/06/19
DESIGNED BY: CFC
DRAWN BY: CFC
CHECKED BY: CFC
PROJECT NO. 01-0187.003.00
DOC CON # C0.05-TYPCRSS
SHT C0.05

T:\0187_003_00-KEENE LAND-MARKET BUS PARK\Dwg\CDs\0187_003-WECI-CDS-0.00-1.00.dwg, C0.05-TYPCROSS, 8/16/2019 3:30:02 PM, DWG To PDF.pc3, WEC 24*36, WEC 24*36

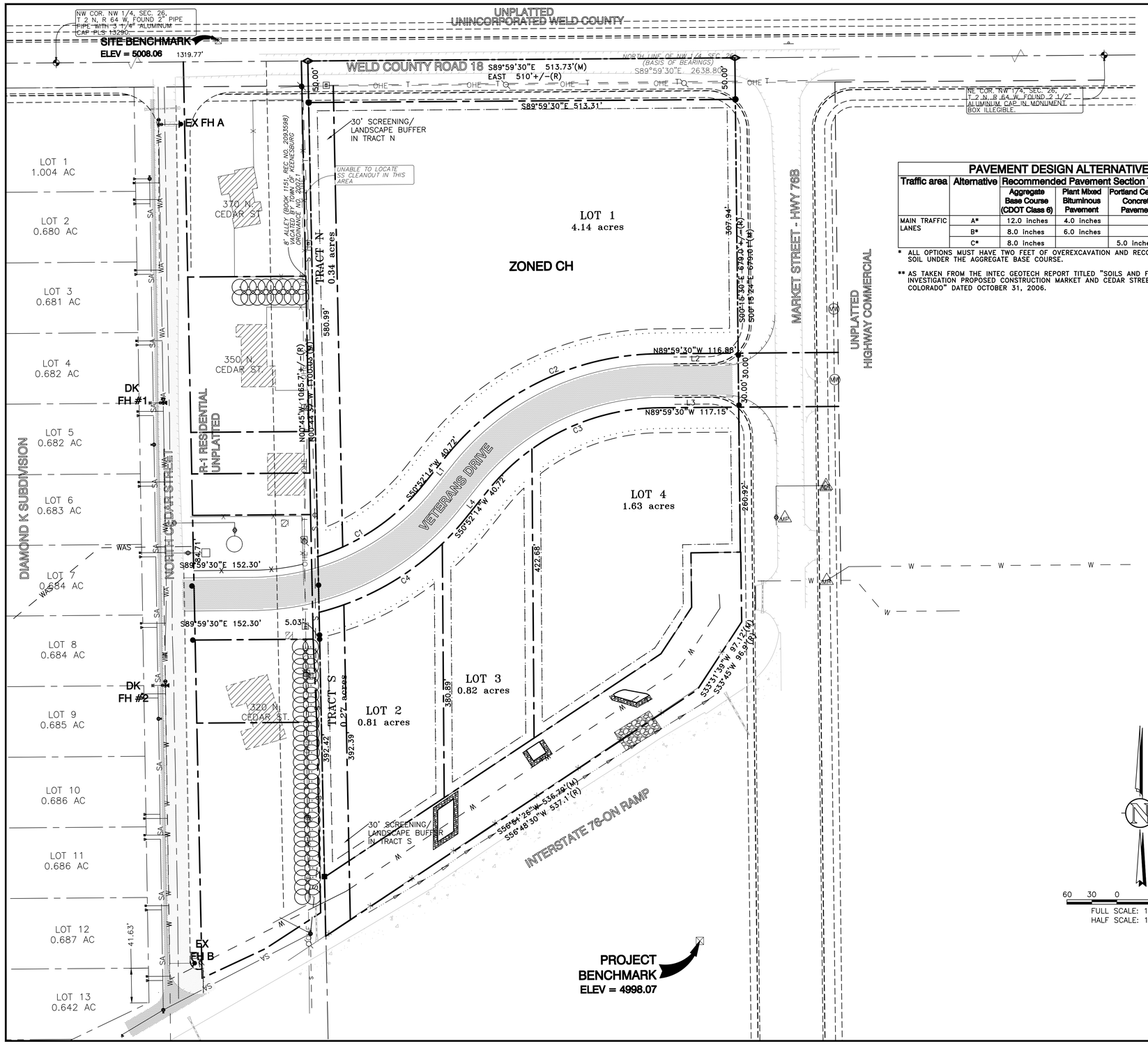

PAVEMENT DESIGN ALTERNATIVES

Traffic area	Alternative	Recommended Pavement Section Thickness (inches)			
		Aggregate Base Course (CDOT Class 6)	Plant Mixed Bituminous Pavement	Portland Cement Concrete Pavement	Total
MAIN TRAFFIC LANES	A*	12.0 inches	4.0 inches		16.0 inches
	B*	8.0 inches	6.0 inches		12.0 inches
	C*	8.0 inches		5.0 inches	11.0 inches

* ALL OPTIONS MUST HAVE TWO FEET OF OVEREXCAVATION AND RECOMPACTION OF NATIVE SOIL UNDER THE AGGREGATE BASE COURSE.

** AS TAKEN FROM THE INTEC GEOTECH REPORT TITLED "SOILS AND FOUNDATION INVESTIGATION PROPOSED CONSTRUCTION MARKET AND CEDAR STREET KEENESBURG, COLORADO" DATED OCTOBER 31, 2006.

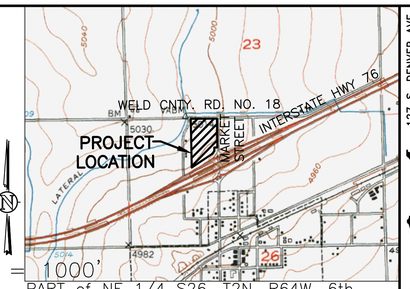

1" = 1000'

PART of NE 1/4 S26, T2N, R64W, 6th PM

SHOWN VICINITY MAP TAKEN FROM USGS QUAD – KEENESBURG 40104–A5

NOTES

THIS PLAN IS INTENDED AS THE PAVING PLAN FOR MARKET STREET BUSINESS PARK SUBDIVISION.

ALL IMPROVEMENTS ARE PROPOSED UNLESS NOTED AS EXISTING.

IT IS THE OWNER AND/OR THE CONTRACTOR'S RESPONSIBILITY TO ATTAIN ALL APPROPRIATE PERMITS AND REVIEW APPROVALS FROM THE STATE OF COLORADO AND TOWN OF KEENESBURG RESPECTIVELY.

SEE "AS BUILT/BOUNDARY SURVEY" COMPLETED BY AMERICAN WEST LAND SURVEY – DATED MAY 24, 2006.

SEE COVER SHEET FOR PROJECT BENCHMARK AND BASIS OF BEARING.

SITE BENCHMARK WAS ESTABLISHED BEING A 3" BRASS CAP IN CONCRETE LYING FIVE FEET WEST OF A CONCRETE IRRIGATION DITCH NEAR THE INTERSECTION OF COUNTY ROAD 18 AND NORTH CEDAR STREET, AND THIRTY FEET NORTH OF THE CENTERLINE OF COUNTY ROAD 18. STAMPED "NATIONAL GEODETIC SURVEY ACD 1" HAVING AN ELEVATION OF 5008.06 FEET (NAVD 1988)

ANY REFERENCE TO EASEMENTS, SURVEY POINTS, OR EXISTING UTILITIES AND FEATURES ARE BASED SOLELY FROM SURVEY INFORMATION PROVIDED BY OTHERS – SPECIFICALLY PER SAME SURVEY NOTED ABOVE.

NOT ALL UNCC UTILITY LOCATES HAVE BEEN PERFORMED. IT IS THE CONTRACTOR'S RESPONSIBILITY TO VERIFY ALL UTILITIES ARE LOCATED AND SURVEY PROVIDED TO THE OWNER AND ENGINEER PRIOR TO CONSTRUCTION DRAWING RELEASE.

BUILDING SETBACKS FRONT/REAR = 25', SIDES = 10' PER ZONE DISTRICT HIGHWAY COMMERICAL (CH).

SYMBOL LEGEND

- 45 DEG BEND
- 22.5 DEG BEND
- RESTRAINED PLUG
- RESTRAINED TEE
- WATER METER
- EXISTING ASPHALT
- RESTRAINED CROSS
- FIRE HYDRANT
- RESTRAINED WATER VALVE
- PIPE CROSSOVER
- MANHOLE
- PROPOSED ASPHALT PAVING

LINETYPE LEGEND

- LOT / PROPERTY LINE
- RIGHT OF WAY LINE
- SETBACK
- EASEMENT
- TO BE ABANDONED LOT LINE
- EXISTING BUILDING, CURB
- EDGE of ASPHALT
- CHAINLINK FENCE
- WIRE FENCE
- POND WQ W/S
- SWALE
- EXISTING SWALE
- EXISTING OVERHEAD ELEC
- EXISTING ELECTICAL LINE
- EXISTING STORM LINE
- EXISTING SANITARY LINE
- EXISTING WATER LINE
- EXISTING GAS LINE
- EXISTING FIBER OPTIC LINE
- EXISTING TELEPHONE LINE
- PROPOSED SANITARY LINE
- PROPOSED SANITARY SERVICE
- PROPOSED STORM LINE
- PROPOSED WATER LINE
- PROPOSED WATER SERVICE
- PROPOSED GAS LINE
- PROPOSED ELECTRIC LINE
- PROPOSED TELEPHONE LINE

127 S. DENVER AVE
FT. LUPTON, CO 80621
www.westernec.com
email: info@westernec.com
(720) 685-9951
FAX (720) 294-1330
Western Engineering Consultants, inc LLC

No.	REVISION	DATE	BY
0	PRELIM/FINAL PLAT SUBMITTAL	08/06/19	CFC

KEENE LAND LLC
CONTACT: RICK ROBERTSON
853 WR 5
KEENESBURG, CO 80643
(303)961-0031

PAVING PLAN
MARKET STREET BUSINESS PARK SUBDIVISION
TOWN of KEENESBURG, WELD COUNTY, COLORADO

Dig Safely.
CALL UNCC
THREE WORKING DAYS BEFORE YOU DIG
811
www.uncc.org
UTILITY NOTIFICATION CENTER OF COLORADO

COLORADO REGISTERED PROFESSIONAL ENGINEER CHAWIN F. CHOW FOR 33802 REVIEW ONLY 08/06/19
ONLY VALID FOR CONSTRUCTION IF SEALED, SIGNED, DATED AND WITH SEAL INTACT

INITIAL PLAN RELEASE: 08/06/19
DESIGNED BY: CFC
DRAWN BY: CFC
CHECKED BY: CFC
PROJECT NO. 01-0187.003.00
DOC CON # C0.06-PAVE
SHT C0.06

T:\0187_003_00-KEENE LAND-MARKET BUS PARK\Dwg\Cds\0187_003-WEC\-CDS-0.00-1.00.dwg, C0.06-PAVE P. 8/16/2019 3:30:10 PM, DWG To PDF.pc3, WEC 24'36, WEC 24'36

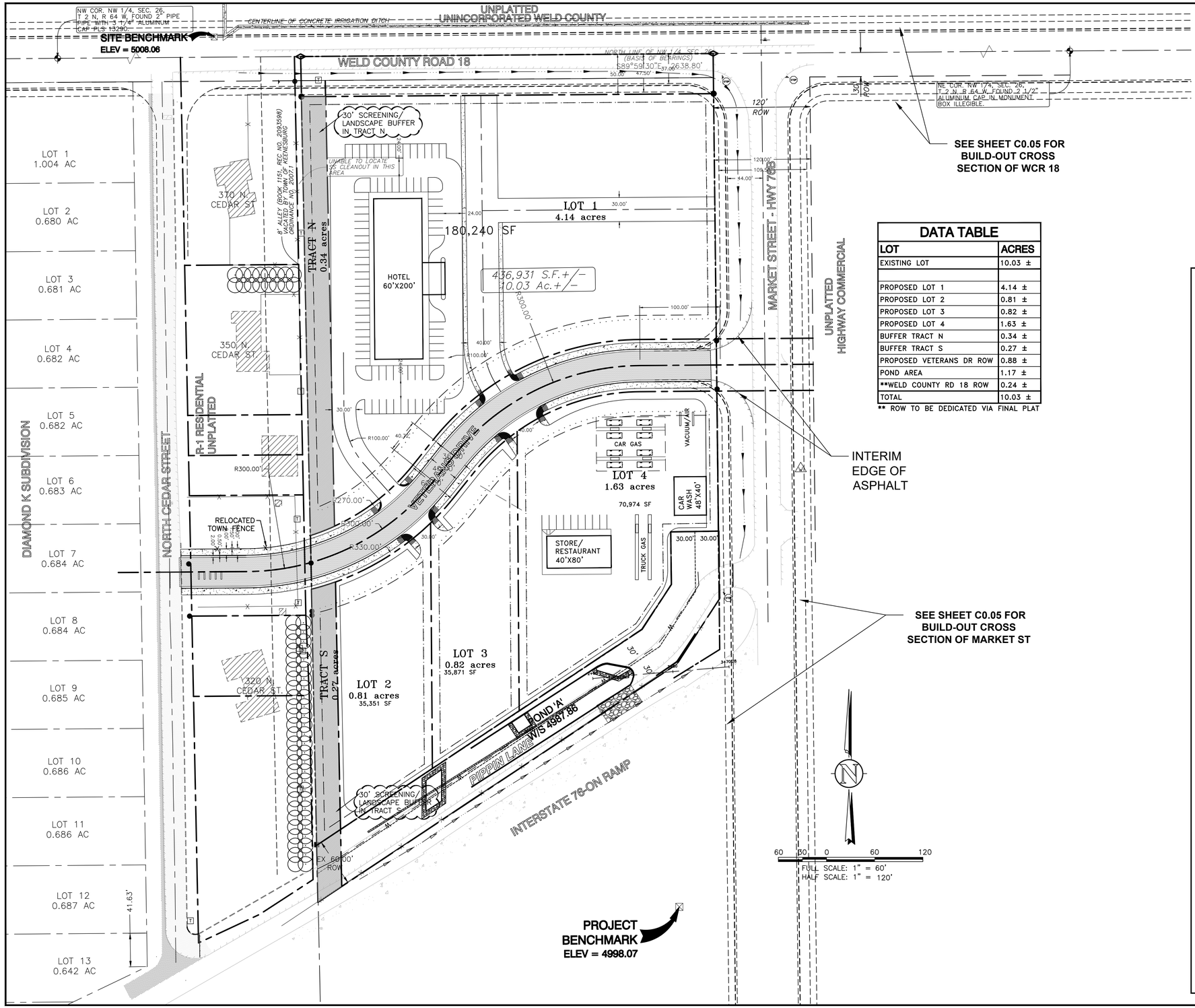

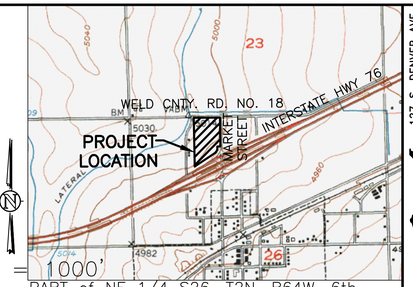

PART of NE 1/4 S26, T2N, R64W, 6th PM

SHOWN VICINITY MAP TAKEN FROM USGS QUAD – KEENESBURG 40104–A5

DATA TABLE

LOT	ACRES
EXISTING LOT	10.03 ±
PROPOSED LOT 1	4.14 ±
PROPOSED LOT 2	0.81 ±
PROPOSED LOT 3	0.82 ±
PROPOSED LOT 4	1.63 ±
BUFFER TRACT N	0.34 ±
BUFFER TRACT S	0.27 ±
PROPOSED VETERANS DR ROW	0.88 ±
POND AREA	1.17 ±
**WELD COUNTY RD 18 ROW	0.24 ±
TOTAL	10.03 ±

** ROW TO BE DEDICATED VIA FINAL PLAT

NOTES

THIS PLAN IS INTENDED AS THE SITE PLAN FOR MARKET STREET BUSINESS PARK SUBDIVISION.

ALL IMPROVEMENTS ARE PROPOSED UNLESS NOTED AS EXISTING.

IT IS THE OWNER AND/OR THE CONTRACTOR'S RESPONSIBILITY TO ATTAIN ALL APPROPRIATE PERMITS AND REVIEW APPROVALS FROM THE STATE OF COLORADO AND TOWN OF KEENESBURG RESPECTIVELY.

SEE "AS BUILT/BOUNDARY SURVEY" COMPLETED BY AMERICAN WEST LAND SURVEY – DATED MAY 24, 2006.

SEE COVER SHEET FOR PROJECT BENCHMARK AND BASIS OF BEARING.

SITE BENCHMARK WAS ESTABLISHED BEING A 3" BRASS CAP IN CONCRETE LYING FIVE FEET WEST OF A CONCRETE IRRIGATION DITCH NEAR THE INTERSECTION OF COUNTY ROAD 18 AND NORTH CEDAR STREET, AND THIRTY FEET NORTH OF THE CENTERLINE OF COUNTY ROAD 18. STAMPED "NATIONAL GEODETIC SURVEY ACD 1" HAVING AN ELEVATION OF 5008.06 FEET (NAVD 1988)

ANY REFERENCE TO EASEMENTS, SURVEY POINTS, OR EXISTING UTILITIES AND FEATURES ARE BASED SOLELY FROM SURVEY INFORMATION PROVIDED BY OTHERS – SPECIFICALLY PER SAME SURVEY NOTED ABOVE.

NOT ALL UNCC UTILITY LOCATES HAVE BEEN PERFORMED. IT IS THE CONTRACTOR'S RESPONSIBILITY TO VERIFY ALL UTILITIES ARE LOCATED AND SURVEY PROVIDED TO THE OWNER AND ENGINEER PRIOR TO CONSTRUCTION DRAWING RELEASE.

BUILDING SETBACKS FRONT/REAR = 25', SIDES = 10' PER ZONE DISTRICT HIGHWAY COMMERICAL (CH).

SYMBOL LEGEND

- 45 DEG BEND
- 22.5 DEG BEND
- RESTRAINED PLUG
- RESTRAINED TEE
- WATER METER
- EXISTING ASPHALT
- RESTRAINED CROSS
- FIRE HYDRANT
- RESTRAINED WATER VALVE
- PIPE CROSSOVER
- MANHOLE
- PROPOSED ASPHALT PAVING

LINETYPE LEGEND

- LOT / PROPERTY LINE
- RIGHT OF WAY LINE
- SETBACK
- EASEMENT
- TO BE ABANDONED LOT LINE
- EXISTING BUILDING, CURB
- EDGE of ASPHALT
- CHAINLINK FENCE
- WIRE FENCE
- POND WQ W/S
- SWALE
- EXISTING SWALE
- EXISTING OVERHEAD ELEC
- EXISTING ELECTICAL LINE
- EXISTING STORM LINE
- EXISTING SANITARY LINE
- EXISTING WATER LINE
- EXISTING GAS LINE
- EXISTING FIBER OPTIC LINE
- EXISTING TELEPHONE LINE
- PROPOSED SANITARY LINE
- PROPOSED SANITARY SERVICE
- PROPOSED STORM LINE
- PROPOSED WATER LINE
- PROPOSED WATER SERVICE
- PROPOSED GAS LINE
- PROPOSED ELECTRIC LINE
- PROPOSED TELEPHONE LINE

127 S. DENVER AVE
FT. LUPTON, CO 80621
www.westernec.com
email@westernec.com
(720) 685-9951
FAX (720) 294-1330
Western Engineering Consultants, inc LLC

No.	REVISION	DATE	BY
0	PRELIM/FINAL PLAT SUBMITTAL	08/06/19	CFC

KEENE LAND LLC
CONTACT: RICK ROBERTSON
853 W 5th
KEENESBURG, CO 80643
(303)961-0031

SITE PLAN
MARKET STREET BUSINESS PARK SUBDIVISION
TOWN of KEENESBURG, WELD COUNTY, COLORADO

Dig Safely.
CALL UNCC
THREE WORKING DAYS BEFORE YOU DIG
811
www.uncc.org
UTILITY NOTIFICATION CENTER OF COLORADO

COLORADO REGISTERED PROFESSIONAL ENGINEER
CHARLES F. FOX
FOR REVIEW ONLY
33802
08/06/19
ONLY VALID FOR CONSTRUCTION IF SEAL & ORIGINAL SIGNATURE ARE ON EACH SHEET

INITIAL PLAN RELEASE: 08/06/19
DESIGNED BY: CFC
DRAWN BY: CFC
CHECKED BY: CFC
PROJECT NO. 01-0187.003.00
DOC CON # C1.00-SITE
SHT C1.00

T:\0187_003_00-KEENE LAND-MARKET BUS PARK\Dwg\CDs\0187_003-WECI-CDS-0.00-1.00.dwg, C1.00-SITE, 8/16/2019 3:30:15 PM, DWG To PDF.pc3, WEC 24'36, WEC 24'36

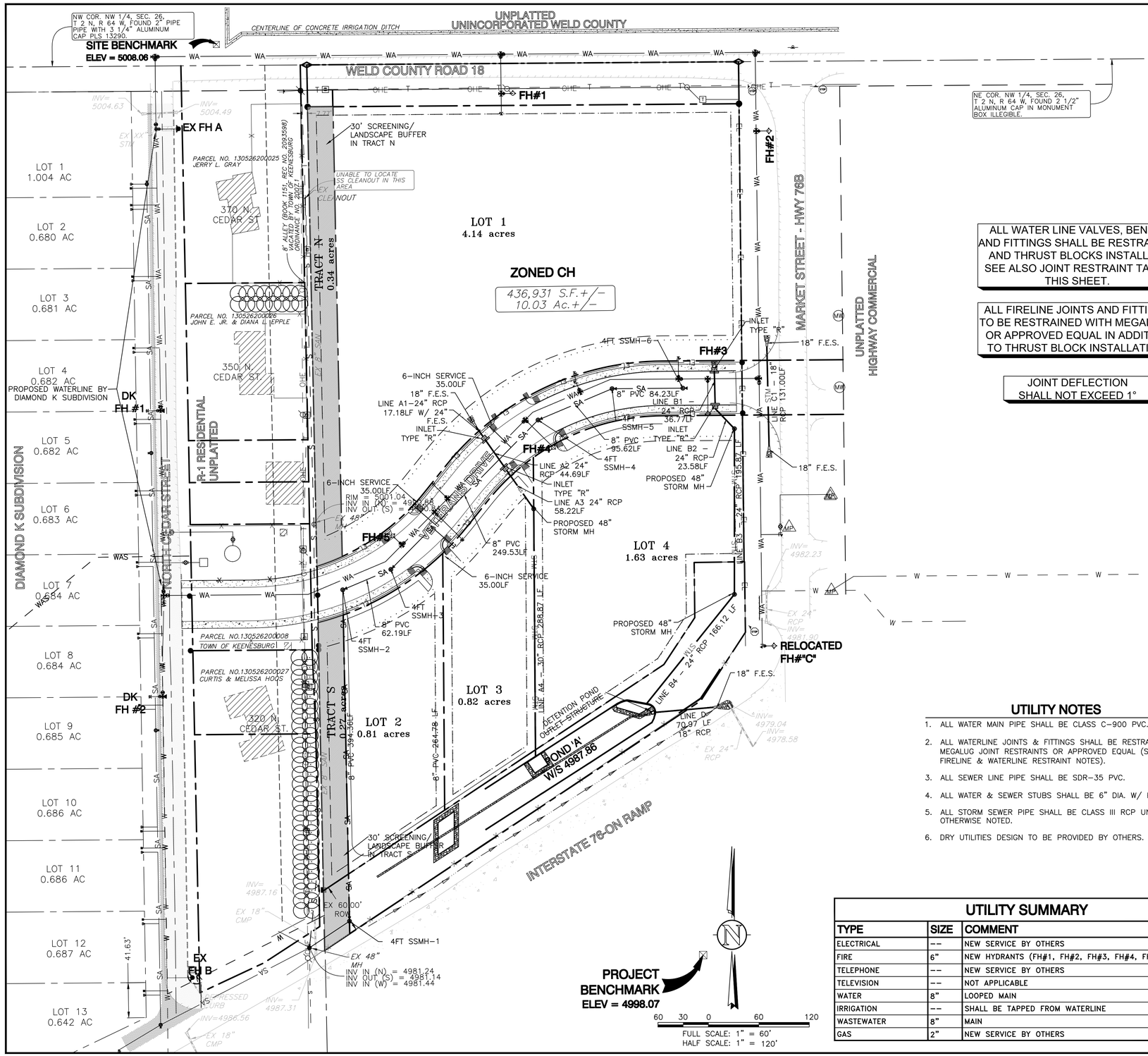

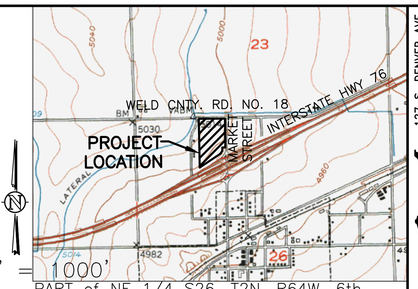

PART of NE 1/4 S26, T2N, R64W, 6th PM

SHOWN VICINITY MAP TAKEN FROM USGS QUAD – KEENESBURG 40104–A5

ALL WATER LINE VALVES, BENDS, AND FITTINGS SHALL BE RESTRAINED AND THRUST BLOCKS INSTALLED. SEE ALSO JOINT RESTRAINT TABLE THIS SHEET.

ALL FIRELINE JOINTS AND FITTINGS TO BE RESTRAINED WITH MEGALUGS OR APPROVED EQUAL IN ADDITION TO THRUST BLOCK INSTALLATION.

JOINT DEFLECTION SHALL NOT EXCEED 1°

NOTES

THIS PLAN IS INTENDED AS THE UTILITY PLAN FOR MARKET STRRET BUSINESS PARK SUBDIVISION.

ALL IMPROVEMENTS ARE PROPOSED UNLESS NOTED AS EXISTING.

IT IS THE OWNER AND/OR THE CONTRACTOR'S RESPONSIBILITY TO ATTAIN ALL APPROPRIATE PERMITS AND REVIEW APPROVALS FROM THE STATE OF COLORADO AND TOWN OF KEENESBURG RESPECTIVELY.

SEE "AS BUILT/BOUNDARY SURVEY" COMPLETED BY AMERICAN WEST LAND SURVEY – DATED MAY 24, 2006.

SEE COVER SHEET FOR PROJECT BENCHMARK AND BASIS OF BEARING.

SITE BENCHMARK WAS ESTABLISHED BEING A 3" BRASS CAP IN CONCRETE LYING FIVE FEET WEST OF A CONCRETE IRRIGATION DITCH NEAR THE INTERSECTION OF COUNTY ROAD 18 AND NORTH CEDAR STREET, AND THIRTY FEET NORTH OF THE CENTERLINE OF COUNTY ROAD 18. STAMPED "NATIONAL GEODETIC SURVEY ACD 1" HAVING AN ELEVATION OF 5008.06 FEET (NAVD 1988)

ANY REFERENCE TO EASEMENTS, SURVEY POINTS, OR EXISTING UTILITIES AND FEATURES ARE BASED SOLELY FROM SURVEY INFORMATION PROVIDED BY OTHERS – SPECIFICALLY PER SAME SURVEY NOTED ABOVE.

NOT ALL UNCC UTILITY LOCATES HAVE BEEN PERFORMED. IT IS THE CONTRACTOR'S RESPONSIBILITY TO VERIFY ALL UTILITIES ARE LOCATED AND SURVEY PROVIDED TO THE OWNER AND ENGINEER PRIOR TO CONSTRUCTION DRAWING RELEASE.

BUILDING SETBACKS FRONT/REAR = 25', SIDES = 10' PER ZONE DISTRICT HIGHWAY COMMERICAL (CH).

SYMBOL LEGEND

45 DEG BEND
22.5 DEG BEND
RESTRAINED PLUG
RESTRAINED TEE
WATER METER
RESTRAINED CROSS
FIRE HYDRANT
RESTRAINED WATER VALVE
PIPE CROSSOVER
MANHOLE
PROPOSED ASPHALT PAVING

LINETYPE LEGEND

LOT / PROPERTY LINE
RIGHT OF WAY LINE
SETBACK
EASEMENT
TO BE ABANDONED LOT LINE
EXISTING BUILDING, CURB
EDGE of ASPHALT
CHAINLINK FENCE
WIRE FENCE
POND WQ W/S
SWALE
EXISTING SWALE
EXISTING OVERHEAD ELEC
EXISTING ELECTICAL LINE
EXISTING STORM LINE
EXISTING SANITARY LINE
EXISTING WATER LINE
EXISTING GAS LINE
EXISTING FIBER OPTIC LINE
EXISTING TELEPHONE LINE

PROPOSED SANITARY LINE
PROPOSED SANITARY SERVICE
PROPOSED STORM LINE
PROPOSED WATER LINE
PROPOSED WATER SERVICE
PROPOSED GAS LINE
PROPOSED ELECTRIC LINE
PROPOSED TELEPHONE LINE

UTILITY NOTES

1. ALL WATER MAIN PIPE SHALL BE CLASS C-900 PVC.
2. ALL WATERLINE JOINTS & FITTINGS SHALL BE RESTRAINED W/ MEGALUG JOINT RESTRAINTS OR APPROVED EQUAL (SEE ALSO FIRELINE & WATERLINE RESTRAINT NOTES).
3. ALL SEWER LINE PIPE SHALL BE SDR-35 PVC.
4. ALL WATER & SEWER STUBS SHALL BE 6" DIA. W/ PLUG.
5. ALL STORM SEWER PIPE SHALL BE CLASS III RCP UNLESS OTHERWISE NOTED.
6. DRY UTILITIES DESIGN TO BE PROVIDED BY OTHERS.

UTILITY SUMMARY

TYPE	SIZE	COMMENT
ELECTRICAL	--	NEW SERVICE BY OTHERS
FIRE	6"	NEW HYDRANTS (FH#1, FH#2, FH#3, FH#4, FH#5, & FH 'C')
TELEPHONE	--	NEW SERVICE BY OTHERS
TELEVISION	--	NOT APPLICABLE
WATER	8"	LOOPED MAIN
IRRIGATION	--	SHALL BE TAPPED FROM WATERLINE
WASTEWATER	8"	MAIN
GAS	2"	NEW SERVICE BY OTHERS

127 S. DENVER AVE
FT. LUPTON, CO 80621
www.westernec.com
email@westernec.com
(720) 685-9951
FAX (720) 294-1330
Western Engineering Consultants, inc LLC

No.	REVISION	DATE	BY
0	PRELIM/FINAL PLAT SUBMITTAL	08/06/19	CFC

KEENE LAND LLC
CONTACT: RICK ROBERTSON
853 W 5th
KEENESBURG, CO 80643
(303)961-0031

UTILITY PLAN
MARKET STREET BUSINESS PARK SUBDIVISION
TOWN of KEENESBURG, WELD COUNTY, COLORADO

Dig Safely.
CALL UNCC
THREE WORKING DAYS BEFORE YOU DIG
811
www.uncc.org
UTILITY NOTIFICATION CENTER OF COLORADO

COLORADO REGISTERED PROFESSIONAL ENGINEER
CHARLIE F. COOK
FOR
33802
REVIEW ONLY
08/06/19
ONLY VALID FOR CONSTRUCTION IF SEAL & ORIGINAL SIGNATURE APPEAR HEREON

INITIAL PLAN RELEASE: 08/06/19
DESIGNED BY: CFC
DRAWN BY: CFC
CHECKED BY: CFC
PROJECT NO. 01-0187.003.00
DOC CON # C2.00-UTILITY
SHT C2.00

T:\0187_003_00-KEENE LAND-MARKET BUS PARK\Dwg\CDs\0187_003-WEC\CDS-2.00.dwg, C2.00-UTILITY, 8/16/2019 3:35:23 PM , DWG To PDF.pc3, WEC 24"36, WEC 24"36

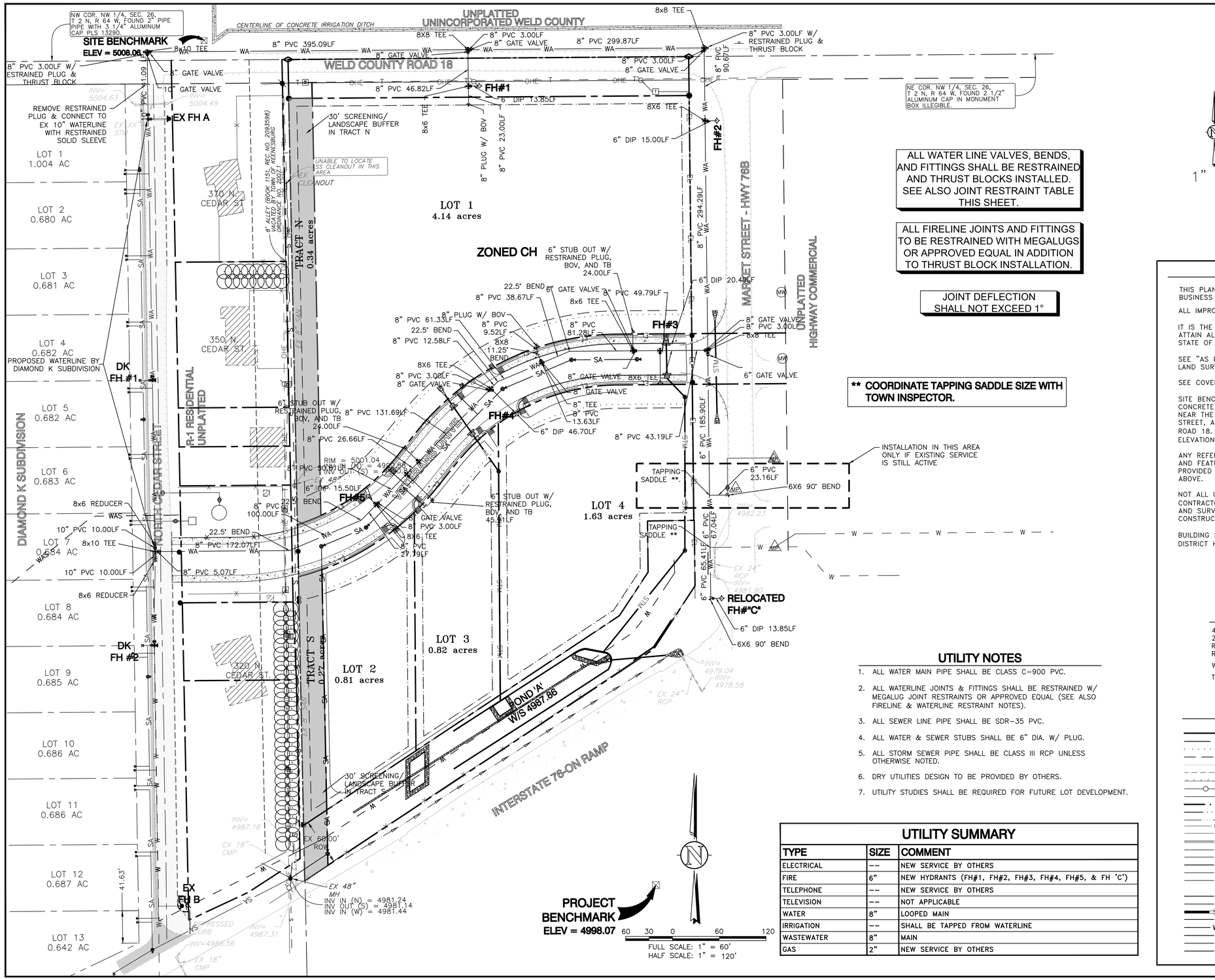

ALL WATER LINE VALVES, BENDS, AND FITTINGS SHALL BE RESTRAINED AND THRUST BLOCKS INSTALLED. SEE ALSO JOINT RESTRAINT TABLE THIS SHEET.

ALL FIRELINE JOINTS AND FITTINGS TO BE RESTRAINED WITH MEGALUGS OR APPROVED EQUAL IN ADDITION TO THRUST BLOCK INSTALLATION.

JOINT DEFLECTION SHALL NOT EXCEED 1°

**** COORDINATE TAPPING SADDLE SIZE WITH TOWN INSPECTOR.**

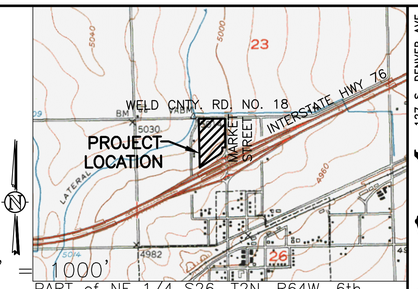

PART of NE 1/4 S26, T2N, R64W, 6th PM

SHOWN VICINITY MAP TAKEN FROM USGS QUAD – KEENESBURG 40104–A5

NOTES

THIS PLAN IS INTENDED AS THE WATER PLAN FOR MARKET STREET BUSINESS PARK SUBDIVISION.

ALL IMPROVEMENTS ARE PROPOSED UNLESS NOTED AS EXISTING.

IT IS THE OWNER AND/OR THE CONTRACTOR'S RESPONSIBILITY TO ATTAIN ALL APPROPRIATE PERMITS AND REVIEW APPROVALS FROM THE STATE OF COLORADO AND TOWN OF KEENESBURG RESPECTIVELY.

SEE "AS BUILT/BOUNDARY SURVEY" COMPLETED BY AMERICAN WEST LAND SURVEY – DATED MAY 24, 2006.

SEE COVER SHEET FOR PROJECT BENCHMARK AND BASIS OF BEARING.

SITE BENCHMARK WAS ESTABLISHED BEING A 3" BRASS CAP IN CONCRETE LYING FIVE FEET WEST OF A CONCRETE IRRIGATION DITCH NEAR THE INTERSECTION OF COUNTY ROAD 18 AND NORTH CEDAR STREET, AND THIRTY FEET NORTH OF THE CENTERLINE OF COUNTY ROAD 18. STAMPED "NATIONAL GEODETIC SURVEY ACD 1" HAVING AN ELEVATION OF 5008.06 FEET (NAVD 1988)

ANY REFERENCE TO EASEMENTS, SURVEY POINTS, OR EXISTING UTILITIES AND FEATURES ARE BASED SOLELY FROM SURVEY INFORMATION PROVIDED BY OTHERS – SPECIFICALLY PER SAME SURVEY NOTED ABOVE.

NOT ALL UNCC UTILITY LOCATES HAVE BEEN PERFORMED. IT IS THE CONTRACTOR'S RESPONSIBILITY TO VERIFY ALL UTILITIES ARE LOCATED AND SURVEY PROVIDED TO THE OWNER AND ENGINEER PRIOR TO CONSTRUCTION DRAWING RELEASE.

BUILDING SETBACKS FRONT/REAR = 25', SIDES = 10' PER ZONE DISTRICT HIGHWAY COMMERICAL (CH).

SYMBOL LEGEND

45 DEG BEND
22.5 DEG BEND
RESTRAINED PLUG
RESTRAINED TEE
WATER METER
TB = THRUST BLOCK
RESTRAINED CROSS
FIRE HYDRANT
RESTRAINED WATER VALVE
PIPE CROSSOVER
MANHOLE
PROPOSED ASPHALT PAVING

LINETYPE LEGEND

LOT / PROPERTY LINE
RIGHT OF WAY LINE
SETBACK
EASEMENT
TO BE ABANDONED LOT LINE
EXISTING BUILDING, CURB
EDGE of ASPHALT
CHAINLINK FENCE
WIRE FENCE
POND WQ W/S
SWALE
EXISTING SWALE
EXISTING OVERHEAD ELEC
EXISTING ELECTICAL LINE
EXISTING STORM LINE
EXISTING SANITARY LINE
EXISTING WATER LINE
EXISTING GAS LINE
EXISTING FIBER OPTIC LINE
EXISTING TELEPHONE LINE

PROPOSED SANITARY LINE
PROPOSED SANITARY SERVICE
PROPOSED STORM LINE
PROPOSED WATER LINE
PROPOSED WATER SERVICE
PROPOSED GAS LINE
PROPOSED ELECTRIC LINE
PROPOSED TELEPHONE LINE

UTILITY NOTES

1. ALL WATER MAIN PIPE SHALL BE CLASS C–900 PVC.
2. ALL WATERLINE JOINTS & FITTINGS SHALL BE RESTRAINED W/ MEGALUG JOINT RESTRAINTS OR APPROVED EQUAL (SEE ALSO FIRELINE & WATERLINE RESTRAINT NOTES).
3. ALL SEWER LINE PIPE SHALL BE SDR–35 PVC.
4. ALL WATER & SEWER STUBS SHALL BE 6" DIA. W/ PLUG.
5. ALL STORM SEWER PIPE SHALL BE CLASS III RCP UNLESS OTHERWISE NOTED.
6. DRY UTILITIES DESIGN TO BE PROVIDED BY OTHERS.
7. UTILITY STUDIES SHALL BE REQUIRED FOR FUTURE LOT DEVELOPMENT.

UTILITY SUMMARY

TYPE	SIZE	COMMENT
ELECTRICAL	--	NEW SERVICE BY OTHERS
FIRE	6"	NEW HYDRANTS (FH#1, FH#2, FH#3, FH#4, FH#5, & FH 'C')
TELEPHONE	--	NEW SERVICE BY OTHERS
TELEVISION	--	NOT APPLICABLE
WATER	8"	LOOPED MAIN
IRRIGATION	--	SHALL BE TAPPED FROM WATERLINE
WASTEWATER	8"	MAIN
GAS	2"	NEW SERVICE BY OTHERS

Western Engineering Consultants, inc LLC
127 S. DENVER AVE
FT. LUPTON, CO 80621
www.westernec.com
enoc@westernec.com
(720) 685–9951
FAX (720) 294–1330

No.	REVISION	DATE	BY
0	PRELIM/FINAL PLAT SUBMITTAL	08/06/19	CFC

KEENE LAND LLC
CONTACT: RICK ROBERTSON
83 WEST
KEENESBURG, CO 80643
(303)961–0031

WATER PLAN
MARKET STREET BUSINESS PARK SUBDIVISION
TOWN of KEENESBURG, WELD COUNTY, COLORADO

Dig Safely.
CALL UNCC
THREE WORKING DAYS BEFORE YOU DIG
811
www.uncc.org
UTILITY NOTIFICATION CENTER OF COLORADO

COLORADO REGISTERED PROFESSIONAL ENGINEER
CHRISTOPHER FOX CARNEY
FOR REVIEW ONLY
08/06/19
ONLY VALID FOR CONSTRUCTION IF SEAL & ORIGINAL SIGNATURE ARE ON EACH SHEET

INITIAL PLAN RELEASE: 08/06/19
DESIGNED BY: CFC
DRAWN BY: CFC
CHECKED BY: CFC
PROJECT NO. 01–0187.003.00
DOC CON # C2.01–UTILWTR
SHT C2.01

T:\0187_003_00-KEENE LAND-MARKET BUS PARK\Dwg\CDs\0187_003-WECI-CDS-2.00.dwg, C2.01-WA-PLAN, 8/16/2019 3:35:31 PM, DWG To PDF.pc3, WEC 24"36, WEC 24"36

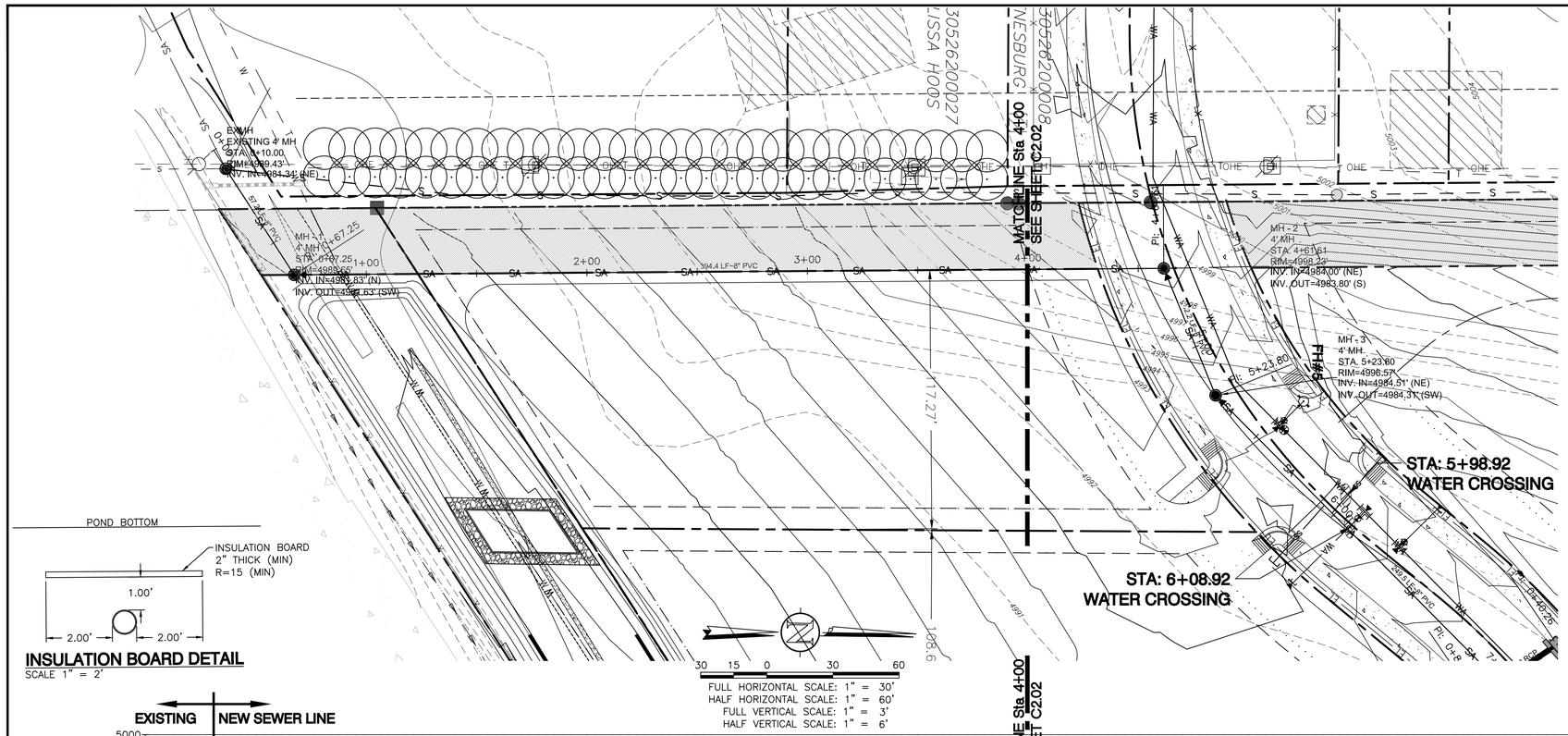

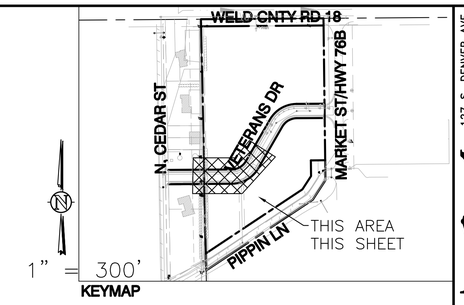

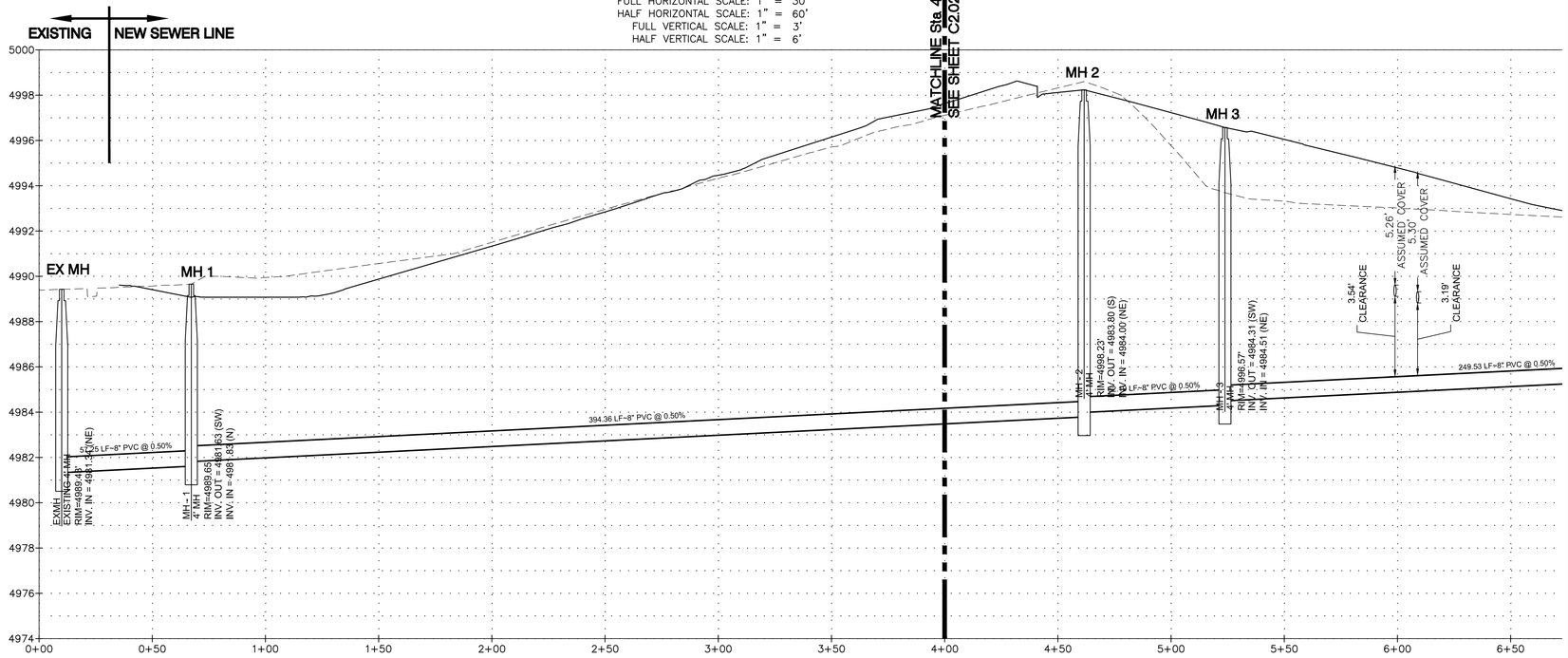

NOTES

THIS PLAN IS INTENDED AS THE SANITARY SEWER PLAN & PROFILE FOR MARKET STREET BUSINESS PARK SUBDIVISION.

ALL IMPROVEMENTS ARE PROPOSED UNLESS NOTED AS EXISTING.

IT IS THE OWNER AND/OR THE CONTRACTOR'S RESPONSIBILITY TO ATTAIN ALL APPROPRIATE PERMITS AND REVIEW APPROVALS FROM THE STATE OF COLORADO AND TOWN OF KEENESBURG RESPECTIVELY.

SEE "AS BUILT/BOUNDARY SURVEY" COMPLETED BY AMERICAN WEST LAND SURVEY – DATED MAY 24, 2006.

SEE COVER SHEET FOR PROJECT BENCHMARK AND BASIS OF BEARING.

SITE BENCHMARK WAS ESTABLISHED BEING A 3" BRASS CAP IN CONCRETE LYING FIVE FEET WEST OF A CONCRETE IRRIGATION DITCH NEAR THE INTERSECTION OF COUNTY ROAD 18 AND NORTH CEDAR STREET, AND THIRTY FEET NORTH OF THE CENTERLINE OF COUNTY ROAD 18. STAMPED "NATIONAL GEODETIC SURVEY ACD 1" HAVING AN ELEVATION OF 5008.06 FEET (NAVD 1988)

ANY REFERENCE TO EASEMENTS, SURVEY POINTS, OR EXISTING UTILITIES AND FEATURES ARE BASED SOLELY FROM SURVEY INFORMATION PROVIDED BY OTHERS – SPECIFICALLY PER SAME SURVEY NOTED ABOVE.

NOT ALL UNCC UTILITY LOCATES HAVE BEEN PERFORMED. IT IS THE CONTRACTOR'S RESPONSIBILITY TO VERIFY ALL UTILITIES ARE LOCATED AND SURVEY PROVIDED TO THE OWNER AND ENGINEER PRIOR TO CONSTRUCTION DRAWING RELEASE.

BUILDING SETBACKS FRONT/REAR = 25', SIDES = 10' PER ZONE DISTRICT HIGHWAY COMMERICAL (CH).

SYMBOL LEGEND

- 45 DEG BEND
- 22.5 DEG BEND
- RESTRAINED PLUG
- RESTRAINED TEE
- WATER METER
- RESTRAINED CROSS
- FIRE HYDRANT
- RESTRAINED WATER VALVE
- PIPE CROSSOVER
- MANHOLE
- PROPOSED ASPHALT PAVING

LINETYPE LEGEND

- LOT / PROPERTY LINE
- RIGHT OF WAY LINE
- SETBACK
- EASEMENT
- TO BE ABANDONED LOT LINE
- EXISTING BUILDING, CURB
- EDGE of ASPHALT
- CHAINLINK FENCE
- WIRE FENCE
- POND WQ W/S
- SWALE
- EXISTING SWALE
- EXISTING OVERHEAD ELEC
- EXISTING ELECTICAL LINE
- EXISTING STORM LINE
- EXISTING SANITARY LINE
- EXISTING WATER LINE
- EXISTING GAS LINE
- EXISTING FIBER OPTIC LINE
- EXISTING TELEPHONE LINE
- PROPOSED SANITARY LINE
- PROPOSED SANITARY SERVICE
- PROPOSED STORM LINE
- PROPOSED WATER LINE
- PROPOSED WATER SERVICE
- PROPOSED GAS LINE
- PROPOSED ELECTRIC LINE
- PROPOSED TELEPHONE LINE

127 S. DENVER AVE
FT. LUPTON, CO 80621
www.westernec.com
email@westernec.com
(720) 685-9951
FAX (720) 294-1330
Western Engineering Consultants, inc LLC

No.	REVISION	DATE	BY
0	PRELIM/FINAL PLAT SUBMITTAL	08/06/19	CFC

KEENE LAND LLC
CONTACT: RICK ROBERTSON
83 CR 16
KEENESBURG, CO 80643
(303)961-0031

SANITARY SEWER PLAN & PROFILE
MARKET STREET BUSINESS PARK SUBDIVISION
TOWN of KEENESBURG, WELD COUNTY, COLORADO

Dig Safely.
CALL UNCC
THREE WORKING DAYS BEFORE YOU DIG
811
www.uncc.org
UTILITY NOTIFICATION CENTER OF COLORADO

COLORADO REGISTERED CHRISTIN F. CORP FOR 33802 REVIEW ONLY 08/06/19 PROFESSIONAL ENGINEER
ONLY VALID FOR CONSTRUCTION IF SEAL & ORIGINAL SIGNATURE APPEAR ON THIS DOCUMENT

INITIAL PLAN RELEASE: 08/06/19
DESIGNED BY: CFC
DRAWN BY: CFC
CHECKED BY: CFC
PROJECT NO. 01-0187.003.00
DOC CON # C2.02-SANP&P
SHT C2.02

T:\0187_003_00-KEENE LAND-MARKET BUS PARK\Dwg\Cbd\0187_003-WEC\-CDS-2.00.dwg, C2.02-SAN-P&P, 8/16/2019 3:35:38 PM, _DWG To PDF.pc3, WEC 24'36, WEC 24'36

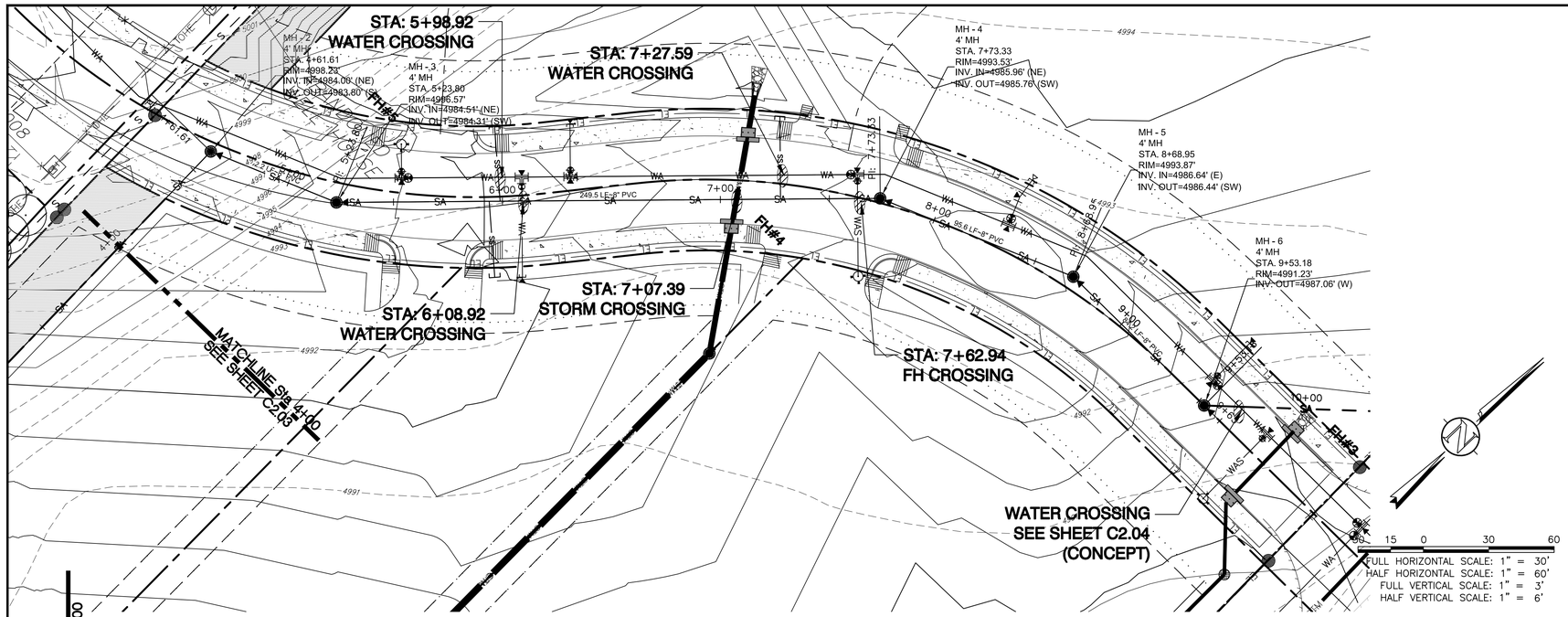

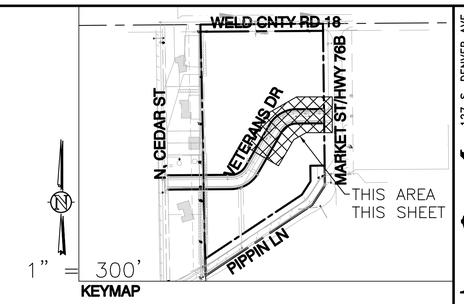

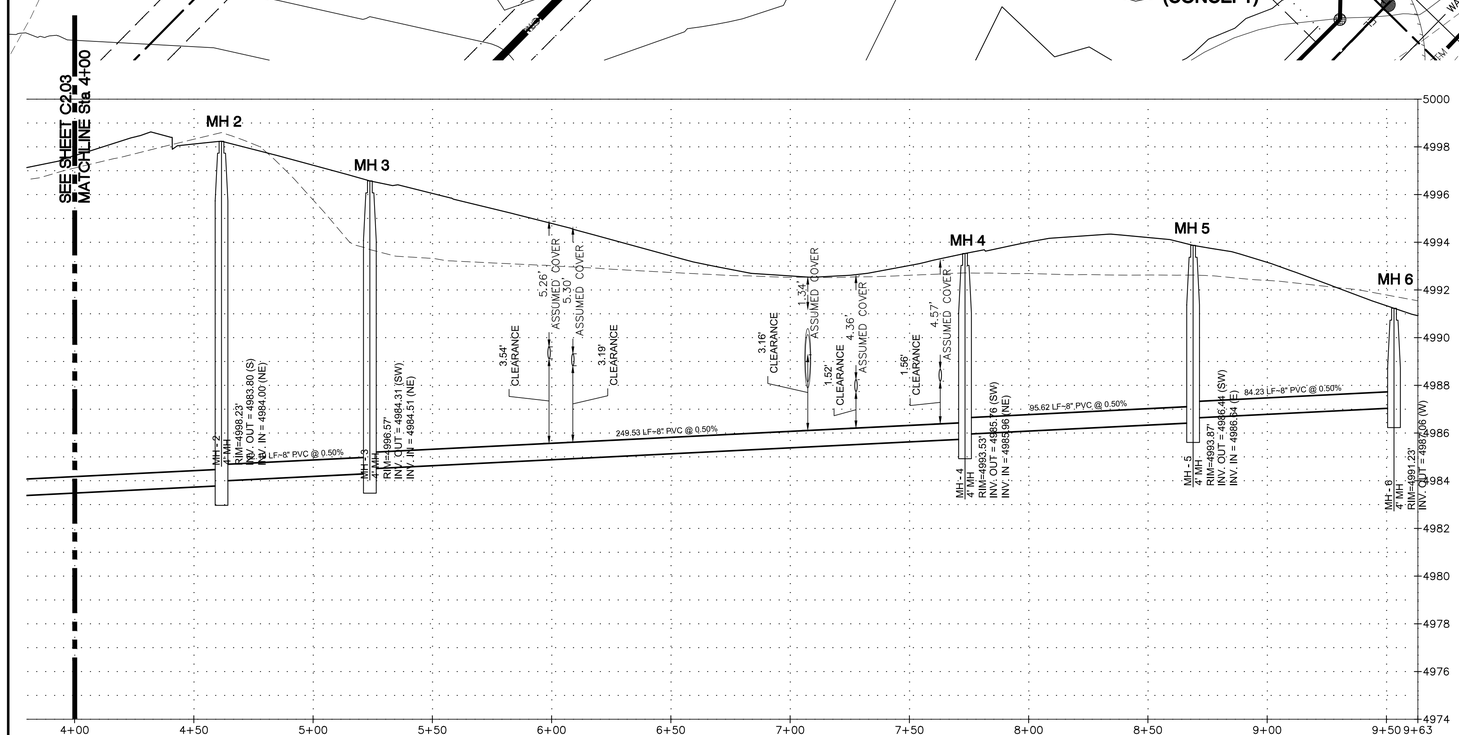

NOTES

THIS PLAN IS INTENDED AS THE SANITARY SEWER PLAN & PROFILE FOR MARKET STREET BUSINESS PARK SUBDIVISION.

ALL IMPROVEMENTS ARE PROPOSED UNLESS NOTED AS EXISTING.

IT IS THE OWNER AND/OR THE CONTRACTOR'S RESPONSIBILITY TO ATTAIN ALL APPROPRIATE PERMITS AND REVIEW APPROVALS FROM THE STATE OF COLORADO AND TOWN OF KEENESBURG RESPECTIVELY.

SEE "AS BUILT/BOUNDARY SURVEY" COMPLETED BY AMERICAN WEST LAND SURVEY – DATED MAY 24, 2006.

SEE COVER SHEET FOR PROJECT BENCHMARK AND BASIS OF BEARING.

SITE BENCHMARK WAS ESTABLISHED BEING A 3" BRASS CAP IN CONCRETE LYING FIVE FEET WEST OF A CONCRETE IRRIGATION DITCH NEAR THE INTERSECTION OF COUNTY ROAD 18 AND NORTH CEDAR STREET, AND THIRTY FEET NORTH OF THE CENTERLINE OF COUNTY ROAD 18. STAMPED "NATIONAL GEODETIC SURVEY ACD 1" HAVING AN ELEVATION OF 5008.06 FEET (NAVD 1988)

ANY REFERENCE TO EASEMENTS, SURVEY POINTS, OR EXISTING UTILITIES AND FEATURES ARE BASED SOLELY FROM SURVEY INFORMATION PROVIDED BY OTHERS – SPECIFICALLY PER SAME SURVEY NOTED ABOVE.

NOT ALL UNCC UTILITY LOCATES HAVE BEEN PERFORMED. IT IS THE CONTRACTOR'S RESPONSIBILITY TO VERIFY ALL UTILITIES ARE LOCATED AND SURVEY PROVIDED TO THE OWNER AND ENGINEER PRIOR TO CONSTRUCTION DRAWING RELEASE.

BUILDING SETBACKS FRONT/REAR = 25', SIDES = 10' PER ZONE DISTRICT HIGHWAY COMMERICAL (CH).

SYMBOL LEGEND

- 45 DEG BEND
- 22.5 DEG BEND
- RESTRAINED PLUG
- RESTRAINED TEE
- WATER METER
- RESTRAINED CROSS
- FIRE HYDRANT
- RESTRAINED WATER VALVE
- PIPE CROSSOVER
- MANHOLE
- PROPOSED ASPHALT PAVING

LINETYPE LEGEND

- LOT / PROPERTY LINE
- RIGHT OF WAY LINE
- SETBACK
- EASEMENT
- TO BE ABANDONED LOT LINE
- EXISTING BUILDING, CURB
- EDGE of ASPHALT
- CHAINLINK FENCE
- WIRE FENCE
- POND WQ W/S
- SWALE
- EXISTING SWALE
- EXISTING OVERHEAD ELEC
- EXISTING ELECTICAL LINE
- EXISTING STORM LINE
- EXISTING SANITARY LINE
- EXISTING WATER LINE
- EXISTING GAS LINE
- EXISTING FIBER OPTIC LINE
- EXISTING TELEPHONE LINE
- PROPOSED SANITARY LINE
- PROPOSED SANITARY SERVICE
- PROPOSED STORM LINE
- PROPOSED WATER LINE
- PROPOSED WATER SERVICE
- PROPOSED GAS LINE
- PROPOSED ELECTRIC LINE
- PROPOSED TELEPHONE LINE

127 S. DENVER AVE
FT. LUPTON, CO 80621
www.westernec.com
email@westernec.com
(720) 685-9951
FAX (720) 294-1330
Western Engineering Consultants, inc LLC

No.	REVISION	DATE	BY
0	PRELIM/FINAL PLAT SUBMITTAL	08/06/19	CFC

KEENE LAND LLC
CONTACT: RICK ROBERTSON
8500 W 96th
KEENESBURG, CO 80643
(303)961-0031

SANITARY SEWER PLAN & PROFILE
MARKET STREET BUSINESS PARK SUBDIVISION
TOWN of KEENESBURG, WELD COUNTY, COLORADO

Dig Safely.
CALL UNCC
THREE WORKING DAYS BEFORE YOU DIG
811
www.uncc.org
UTILITY NOTIFICATION CENTER OF COLORADO

COLORADO REGISTERED PROFESSIONAL ENGINEER
CHRISTIN P. [illegible]
FOR
33802
REVIEW ONLY
08/06/19
ONLY VALID FOR CONSTRUCTION IF SEAL & ORIGINAL SIGNATURE ARE ON EACH SHEET

INITIAL PLAN RELEASE: 08/06/19
DESIGNED BY: CFC
DRAWN BY: CFC
CHECKED BY: CFC
PROJECT NO. 01-0187.003.00
DOC CON # C2.03-SANP&P
SHT C2.03

T:\0187_003_00-KEENE LAND-MARKET BUS PARK\Dwg\CDs\0187_003-WEC-CDS-2.00.dwg, C2.03-SAN-P&P, 8/16/2019 3:35:48 PM, DWG To PDF.pc3, WEC 24"36, WEC 24"36

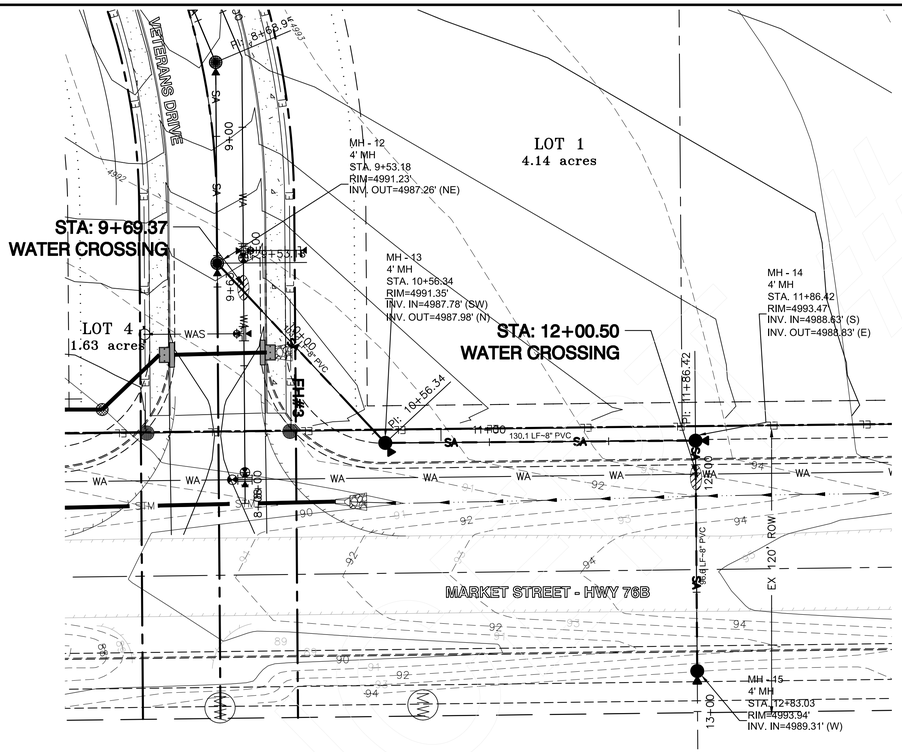

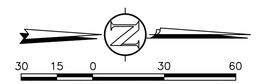

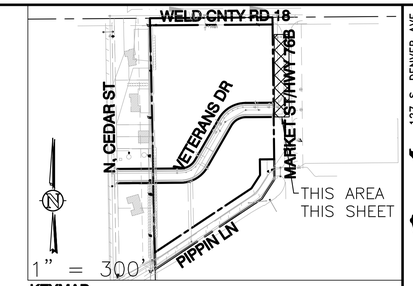

KEYMAP

CONCEPT OPTION 1

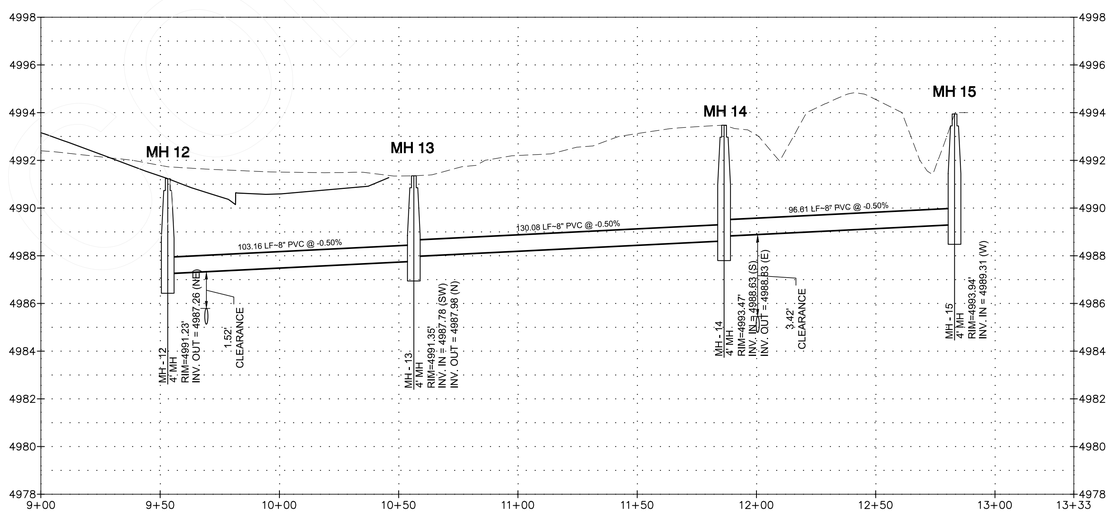

NOTES

THIS PLAN IS INTENDED AS THE SANITARY SEWER CONCEPT #1 PLAN & PROFILE FOR MARKET STREET BUSINESS PARK SUBDIVISION.

ALL IMPROVEMENTS ARE PROPOSED UNLESS NOTED AS EXISTING.

IT IS THE OWNER AND/OR THE CONTRACTOR'S RESPONSIBILITY TO ATTAIN ALL APPROPRIATE PERMITS AND REVIEW APPROVALS FROM THE STATE OF COLORADO AND TOWN OF KEENESBURG RESPECTIVELY.

SEE "AS BUILT/BOUNDARY SURVEY" COMPLETED BY AMERICAN WEST LAND SURVEY – DATED MAY 24, 2006.

SEE COVER SHEET FOR PROJECT BENCHMARK AND BASIS OF BEARING.

SITE BENCHMARK WAS ESTABLISHED BEING A 3" BRASS CAP IN CONCRETE LYING FIVE FEET WEST OF A CONCRETE IRRIGATION DITCH NEAR THE INTERSECTION OF COUNTY ROAD 18 AND NORTH CEDAR STREET, AND THIRTY FEET NORTH OF THE CENTERLINE OF COUNTY ROAD 18. STAMPED "NATIONAL GEODETIC SURVEY ACD 1" HAVING AN ELEVATION OF 5008.06 FEET (NAVD 1988)

ANY REFERENCE TO EASEMENTS, SURVEY POINTS, OR EXISTING UTILITIES AND FEATURES ARE BASED SOLELY FROM SURVEY INFORMATION PROVIDED BY OTHERS – SPECIFICALLY PER SAME SURVEY NOTED ABOVE.

NOT ALL UNCC UTILITY LOCATES HAVE BEEN PERFORMED. IT IS THE CONTRACTOR'S RESPONSIBILITY TO VERIFY ALL UTILITIES ARE LOCATED AND SURVEY PROVIDED TO THE OWNER AND ENGINEER PRIOR TO CONSTRUCTION DRAWING RELEASE.

BUILDING SETBACKS FRONT/REAR = 25', SIDES = 10' PER ZONE DISTRICT HIGHWAY COMMERICAL (CH).

SYMBOL LEGEND

- 45 DEG BEND
- 22.5 DEG BEND
- RESTRAINED PLUG
- RESTRAINED TEE
- WATER METER
- RESTRAINED CROSS
- FIRE HYDRANT
- RESTRAINED WATER VALVE
- PIPE CROSSOVER
- MANHOLE
- PROPOSED ASPHALT PAVING

LINETYPE LEGEND

- LOT / PROPERTY LINE
- RIGHT OF WAY LINE
- SETBACK
- EASEMENT
- TO BE ABANDONED LOT LINE
- EXISTING BUILDING, CURB
- EDGE of ASPHALT
- CHAINLINK FENCE
- WIRE FENCE
- POND WQ W/S
- SWALE
- EXISTING SWALE
- EXISTING OVERHEAD ELEC
- EXISTING ELECTICAL LINE
- EXISTING STORM LINE
- EXISTING SANITARY LINE
- EXISTING WATER LINE
- EXISTING GAS LINE
- EXISTING FIBER OPTIC LINE
- EXISTING TELEPHONE LINE
- PROPOSED SANITARY LINE
- PROPOSED SANITARY SERVICE
- PROPOSED STORM LINE
- PROPOSED WATER LINE
- PROPOSED WATER SERVICE
- PROPOSED GAS LINE
- PROPOSED ELECTRIC LINE
- PROPOSED TELEPHONE LINE

127 S. DENVER AVE
FT. LUPTON, CO 80621
www.westernec.com
email@westernec.com
(720) 685-9951
FAX (720) 294-1330
Western Engineering Consultants, inc LLC

No.	REVISION	DATE	BY
0	PRELIM/FINAL PLAT SUBMITTAL	08/06/19	CFC

KEENE LAND LLC
CONTACT: RICK ROBERTSON
853 W 5
KEENESBURG, CO 80643
(303)961-0031

CONCEPT #1 SAN SEWER PLAN & PROFILE
MARKET STREET BUSINESS PARK SUBDIVISION
TOWN of KEENESBURG, WELD COUNTY, COLORADO

Dig Safely.
CALL UNCC
THREE WORKING DAYS BEFORE YOU DIG
811
www.uncc.org
UTILITY NOTIFICATION CENTER OF COLORADO

COLORADO REGISTERED CHRISTIN F. CORY FOR 33802 FOR REVIEW ONLY 08/06/19 PROFESSIONAL ENGINEER
ONLY VALID FOR CONSTRUCTION IF SEAL & ORIGINAL SIGNATURE APPEAR ON EACH SHEET

INITIAL PLAN RELEASE: 08/06/19
DESIGNED BY: CFC
DRAWN BY: CFC
CHECKED BY: CFC
PROJECT NO. 01-0187.003.00
DOC CON # C2.04-SANP&P
SHT C2.04

T:\0187_003_00-KEENE LAND-MARKET BUS PARK\Dwg\CDs\0187_003-WEC\-CDS-2.00.dwg, C2.04-SAN-P&P, 8/16/2019 3:35:57 PM, _DWG To PDF.pc3, WEC 24'36, WEC 24'36

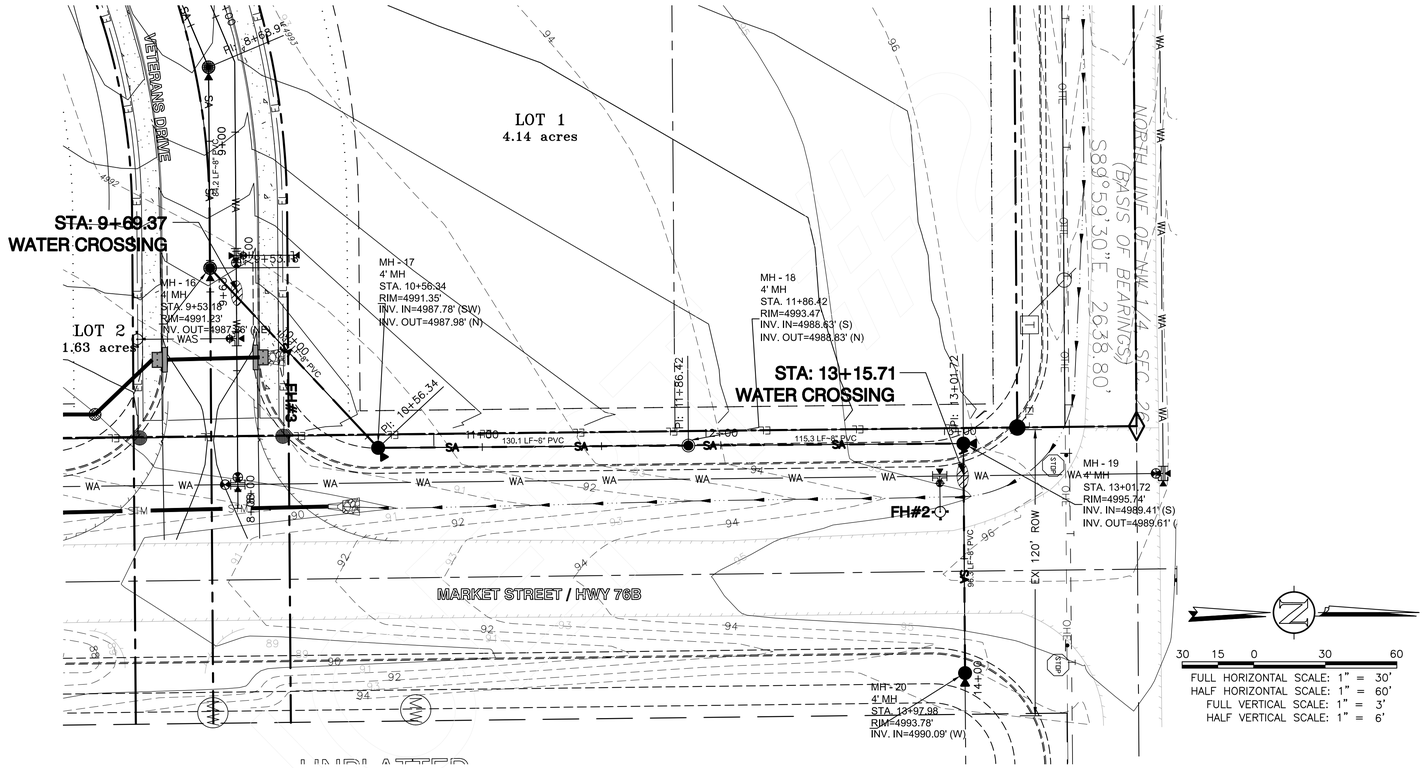

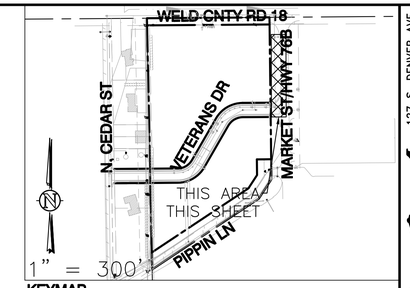

KEYMAP

NOTES

THIS PLAN IS INTENDED AS THE SANITARY SEWER CONCEPT #2 PLAN & PROFILE FOR MARKET STREET BUSINESS PARK SUBDIVISION.

ALL IMPROVEMENTS ARE PROPOSED UNLESS NOTED AS EXISTING.

IT IS THE OWNER AND/OR THE CONTRACTOR'S RESPONSIBILITY TO ATTAIN ALL APPROPRIATE PERMITS AND REVIEW APPROVALS FROM THE STATE OF COLORADO AND TOWN OF KEENESBURG RESPECTIVELY.

SEE "AS BUILT/BOUNDARY SURVEY" COMPLETED BY AMERICAN WEST LAND SURVEY – DATED MAY 24, 2006.

SEE COVER SHEET FOR PROJECT BENCHMARK AND BASIS OF BEARING.

SITE BENCHMARK WAS ESTABLISHED BEING A 3" BRASS CAP IN CONCRETE LYING FIVE FEET WEST OF A CONCRETE IRRIGATION DITCH NEAR THE INTERSECTION OF COUNTY ROAD 18 AND NORTH CEDAR STREET, AND THIRTY FEET NORTH OF THE CENTERLINE OF COUNTY ROAD 18. STAMPED "NATIONAL GEODETIC SURVEY ACD 1" HAVING AN ELEVATION OF 5008.06 FEET (NAVD 1988)

ANY REFERENCE TO EASEMENTS, SURVEY POINTS, OR EXISTING UTILITIES AND FEATURES ARE BASED SOLELY FROM SURVEY INFORMATION PROVIDED BY OTHERS – SPECIFICALLY PER SAME SURVEY NOTED ABOVE.

NOT ALL UNCC UTILITY LOCATES HAVE BEEN PERFORMED. IT IS THE CONTRACTOR'S RESPONSIBILITY TO VERIFY ALL UTILITIES ARE LOCATED AND SURVEY PROVIDED TO THE OWNER AND ENGINEER PRIOR TO CONSTRUCTION DRAWING RELEASE.

BUILDING SETBACKS FRONT/REAR = 25', SIDES = 10' PER ZONE DISTRICT HIGHWAY COMMERICAL (CH).

CONCEPT OPTION 2

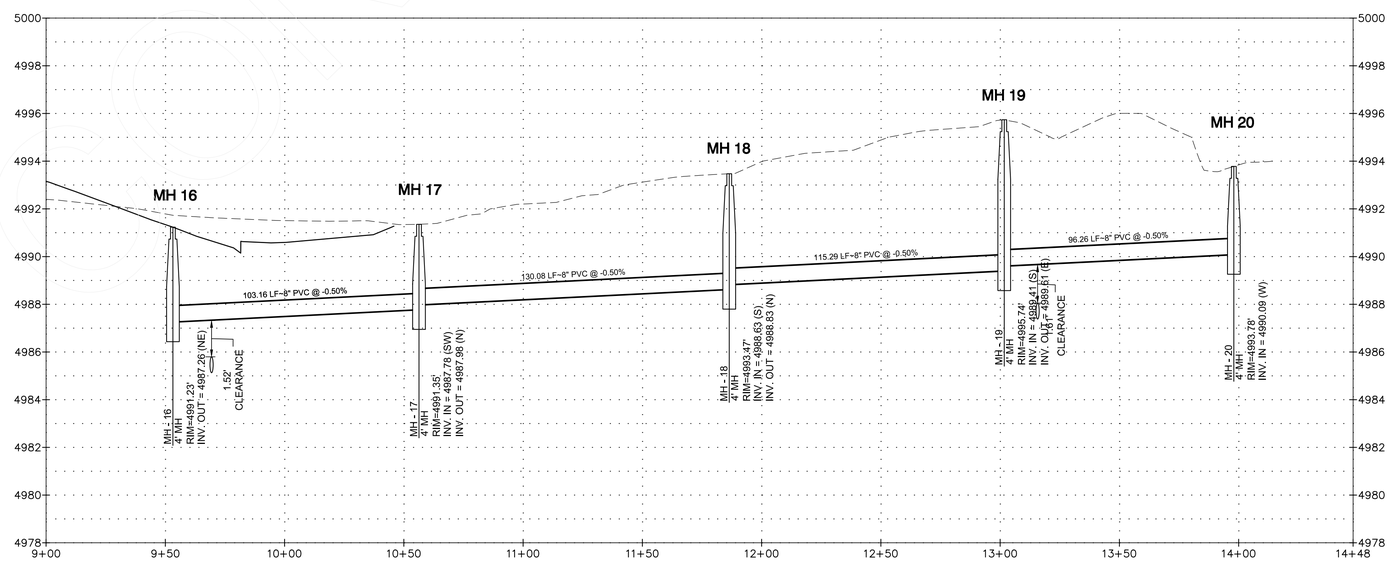

SYMBOL LEGEND

45 DEG BEND
22.5 DEG BEND
RESTRAINED PLUG
RESTRAINED TEE
WATER METER
RESTRAINED CROSS
FIRE HYDRANT
RESTRAINED WATER VALVE
PIPE CROSSOVER
MANHOLE
PROPOSED ASPHALT PAVING

LINETYPE LEGEND

LOT / PROPERTY LINE
RIGHT OF WAY LINE
SETBACK
EASEMENT
TO BE ABANDONED LOT LINE
EXISTING BUILDING, CURB
EDGE of ASPHALT
CHAINLINK FENCE
WIRE FENCE
POND WQ W/S
SWALE
EXISTING SWALE
EXISTING OVERHEAD ELEC
EXISTING ELECTICAL LINE
EXISTING STORM LINE
EXISTING SANITARY LINE
EXISTING WATER LINE
EXISTING GAS LINE
EXISTING FIBER OPTIC LINE
EXISTING TELEPHONE LINE

PROPOSED SANITARY LINE
PROPOSED SANITARY SERVICE
PROPOSED STORM LINE
PROPOSED WATER LINE
PROPOSED WATER SERVICE
PROPOSED GAS LINE
PROPOSED ELECTRIC LINE
PROPOSED TELEPHONE LINE

127 S. DENVER AVE
FT. LUPTON, CO 80621
www.westernec.com
email@westernec.com
(720) 685-9951
FAX (720) 294-1330
Western Engineering Consultants, inc LLC

No.	REVISION	DATE	BY
0	PRELIM/FINAL PLAT SUBMITTAL	08/06/19	CFC

KEENE LAND LLC
CONTACT: RICK ROBERTSON
83 W 1st
KEENESBURG, CO 80643
(303)961-0031

CONCEPT #2 SAN SEWER PLAN & PROFILE
MARKET STREET BUSINESS PARK SUBDIVISION
TOWN of KEENESBURG, WELD COUNTY, COLORADO

Dig Safely.
CALL UNCC
THREE WORKING DAYS BEFORE YOU DIG
811
www.uncc.org
UTILITY NOTIFICATION CENTER OF COLORADO

COLORADO REGISTERED PROFESSIONAL ENGINEER
CHAWN P. FOX
FOR
33802
REVIEW ONLY
08/06/19
ONLY VALID FOR CONSTRUCTION IF SEAL & ORIGINAL SIGNATURE ARE ON EACH SHEET

INITIAL PLAN RELEASE: 08/06/19
DESIGNED BY: CFC
DRAWN BY: CFC
CHECKED BY: CFC

PROJECT NO. 01-0187.003.00
DOC CON # C2.05-SANP&P
SHT C2.05

T:\0187_003_00-KEENE LAND-MARKET BUS PARK\Dwg\CDs\0187_003-WEC\-CDS-2.00.dwg, C2.05-SAN-P&P, 8/16/2019 3:36:07 PM, , DWG To PDF.pc3, WEC 24"36, WEC 24"36

ALL WATER LINE VALVES, BENDS, AND FITTINGS SHALL BE RESTRAINED AND THRUST BLOCKS INSTALLED. SEE ALSO JOINT RESTRAINT TABLE THIS SHEET.

ALL FIRELINE JOINTS AND FITTINGS TO BE RESTRAINED WITH MEGALUGS OR APPROVED EQUAL IN ADDITION TO THRUST BLOCK INSTALLATION.

IF LESS THAN 18" CLEARANCE BETWEEN UTILITY CROSSINGS INSTALL PIPE SUPPORT CROSSING BETWEEN UTILITY CROSSING. MIN. ENCASEMENT OF O.D. + 18" EACH DIRECTION - 3'x3'x20' MIN. FLOWFILL (150 PSI) OF BOTH LINES (10' EACH SIDE OF UTILITY CROSSING)

CONTRACTOR TO DEFLECT VERTICAL ALIGNMENT AS NOTED AND SHOWN IN PROFILE VIEW. DEFLECTIONS CAN BE AT JOINTS OR FITTINGS. RESTRAIN EACH JOINT WHERE DEFLECTION OCCURS.

JOINT DEFLECTION SHALL NOT EXCEED 1°

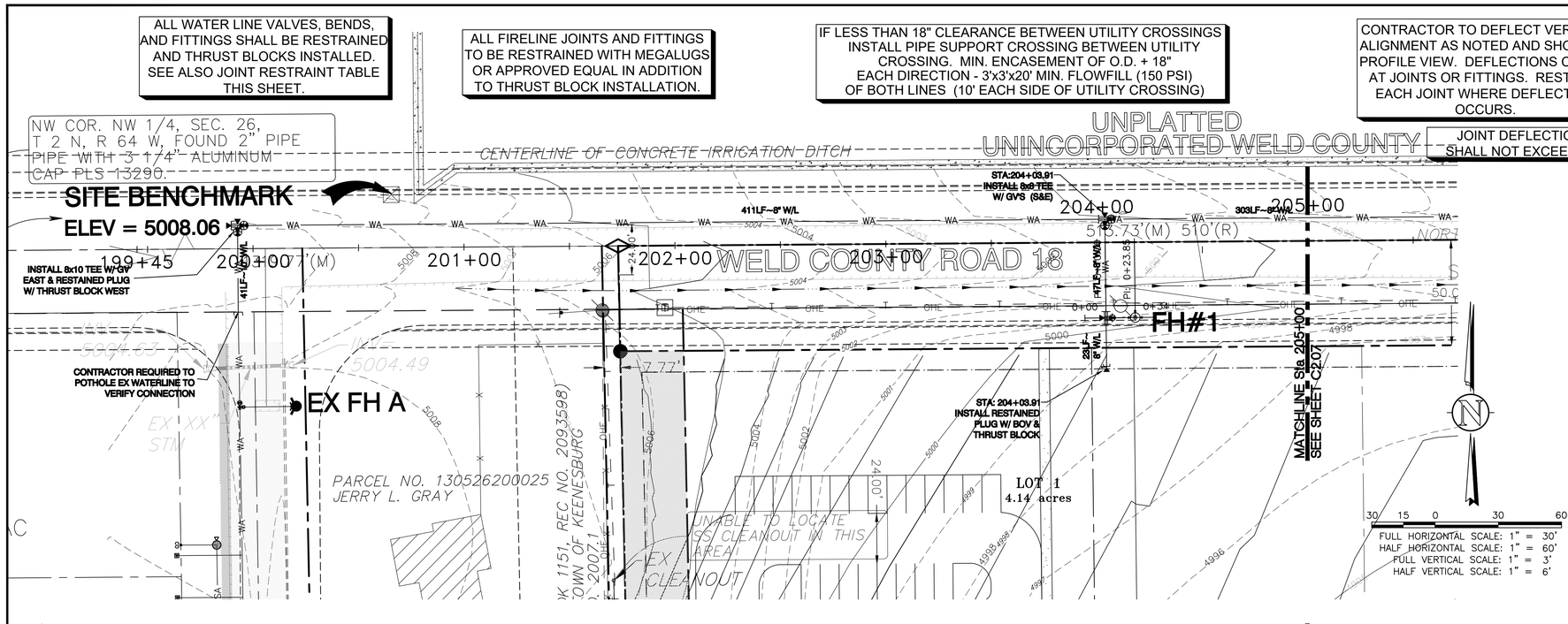

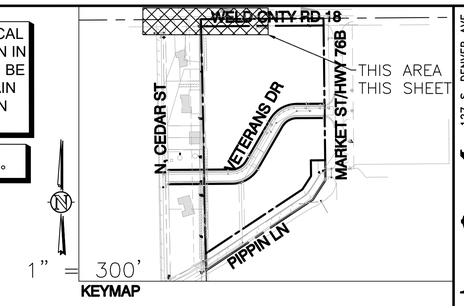

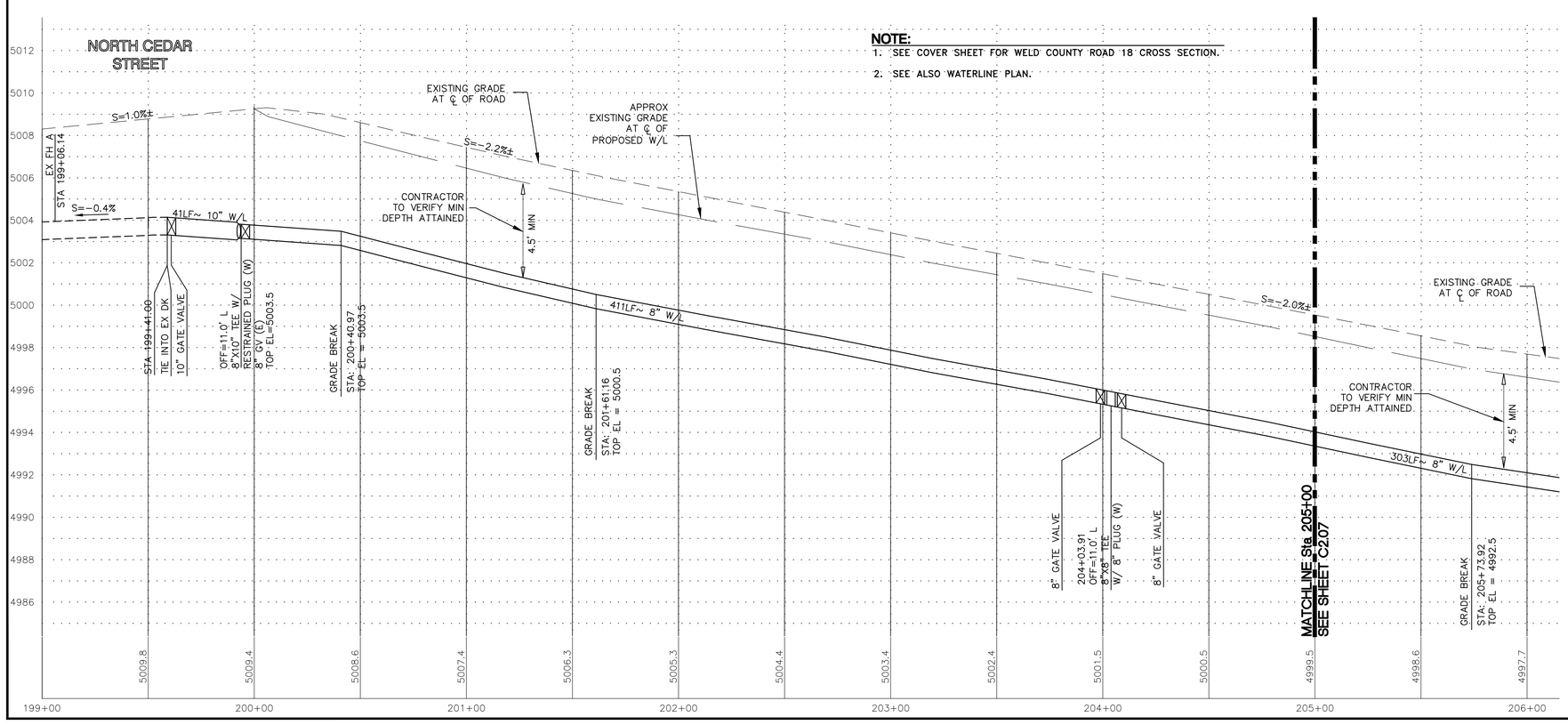

NOTE:

1. SEE COVER SHEET FOR WELD COUNTY ROAD 18 CROSS SECTION.
2. SEE ALSO WATERLINE PLAN.

NOTES

THIS PLAN IS INTENDED AS THE WELD COUNTY RD 18 WATERLINE PLAN & PROFILE FOR MARKET STREET BUSINESS PARK SUBDIVISION.

ALL IMPROVEMENTS ARE PROPOSED UNLESS NOTED AS EXISTING.

IT IS THE OWNER AND/OR THE CONTRACTOR'S RESPONSIBILITY TO ATTAIN ALL APPROPRIATE PERMITS AND REVIEW APPROVALS FROM THE STATE OF COLORADO AND TOWN OF KEENESBURG RESPECTIVELY.

SEE "AS BUILT/BOUNDARY SURVEY" COMPLETED BY AMERICAN WEST LAND SURVEY – DATED MAY 24, 2006.

SEE COVER SHEET FOR PROJECT BENCHMARK AND BASIS OF BEARING.

SITE BENCHMARK WAS ESTABLISHED BEING A 3" BRASS CAP IN CONCRETE LYING FIVE FEET WEST OF A CONCRETE IRRIGATION DITCH NEAR THE INTERSECTION OF COUNTY ROAD 18 AND NORTH CEDAR STREET, AND THIRTY FEET NORTH OF THE CENTERLINE OF COUNTY ROAD 18. STAMPED "NATIONAL GEODETIC SURVEY ACD 1" HAVING AN ELEVATION OF 5008.06 FEET (NAVD 1988)

ANY REFERENCE TO EASEMENTS, SURVEY POINTS, OR EXISTING UTILITIES AND FEATURES ARE BASED SOLELY FROM SURVEY INFORMATION PROVIDED BY OTHERS – SPECIFICALLY PER SAME SURVEY NOTED ABOVE.

NOT ALL UNCC UTILITY LOCATES HAVE BEEN PERFORMED. IT IS THE CONTRACTOR'S RESPONSIBILITY TO VERIFY ALL UTILITIES ARE LOCATED AND SURVEY PROVIDED TO THE OWNER AND ENGINEER PRIOR TO CONSTRUCTION DRAWING RELEASE.

BUILDING SETBACKS FRONT/REAR = 25', SIDES = 10' PER ZONE DISTRICT HIGHWAY COMMERICAL (CH).

SYMBOL LEGEND

- 45 DEG BEND
- 22.5 DEG BEND
- RESTRAINED PLUG
- RESTRAINED TEE
- WATER METER
- RESTRAINED CROSS
- FIRE HYDRANT
- RESTRAINED WATER VALVE
- PIPE CROSSOVER
- MANHOLE
- PROPOSED ASPHALT PAVING

LINETYPE LEGEND

- LOT / PROPERTY LINE
- RIGHT OF WAY LINE
- SETBACK
- EASEMENT
- TO BE ABANDONED LOT LINE
- EXISTING BUILDING, CURB
- EDGE of ASPHALT
- CHAINLINK FENCE
- WIRE FENCE
- POND WQ W/S
- SWALE
- EXISTING SWALE
- EXISTING OVERHEAD ELEC
- EXISTING ELECTICAL LINE
- EXISTING STORM LINE
- EXISTING SANITARY LINE
- EXISTING WATER LINE
- EXISTING GAS LINE
- EXISTING FIBER OPTIC LINE
- EXISTING TELEPHONE LINE
- PROPOSED SANITARY LINE
- PROPOSED SANITARY SERVICE
- PROPOSED STORM LINE
- PROPOSED WATER LINE
- PROPOSED WATER SERVICE
- PROPOSED GAS LINE
- PROPOSED ELECTRIC LINE
- PROPOSED TELEPHONE LINE

127 S. DENVER AVE
FT. LUPTON, CO 80621
www.westernec.com
email@westernec.com
(720) 685-9951
FAX (720) 294-1330
Western Engineering Consultants, inc LLC

No.	REVISION	DATE	BY
0	PRELIM/FINAL PLAT SUBMITTAL	08/06/19	CFC

KEENE LAND LLC
CONTACT: RICK ROBERTSON
83 W 1st
KEENESBURG, CO 80643
(303)961-0031

WCR 18 WATER LINE PLAN & PROFILE
MARKET STREET BUSINESS PARK SUBDIVISION
TOWN of KEENESBURG, WELD COUNTY, COLORADO

Dig Safely.
CALL UNCC
THREE WORKING DAYS BEFORE YOU DIG
811
www.UNCC.org
UTILITY NOTIFICATION CENTER OF COLORADO

COLORADO REGISTERED PROFESSIONAL ENGINEER
CHRISTOPHER FOX CARNEY
FOR REVIEW ONLY
33802
08/06/19
ONLY VALID FOR CONSTRUCTION IF SEAL & ORIGINAL SIGNATURE ARE ON EACH SHEET

INITIAL PLAN RELEASE: 07/22/19
DESIGNED BY: CFC
DRAWN BY: CFC
CHECKED BY: CFC
PROJECT NO. 01-0187.003.00
DOC CON # C2.06-WC18P&P
SHT C2.06

T:\0187_003_00-KEENE LAND-MARKET BUS PARK\Dwg\CDs\0187_003-WECI-CDS-2.00.dwg, C2.06-WCR18P&P, 8/16/2019 3:36:17 PM, , DWG To PDF.pc3, WEC 24"36, WEC 24"36

IF LESS THAN 18" CLEARANCE BETWEEN UTILITY CROSSINGS INSTALL PIPE SUPPORT CROSSING BETWEEN UTILITY CROSSING. MIN. ENCASEMENT OF O.D. + 18" EACH DIRECTION - 3'x3'x20' MIN. FLOWFILL (150 PSI) OF BOTH LINES (10' EACH SIDE OF UTILITY CROSSING)

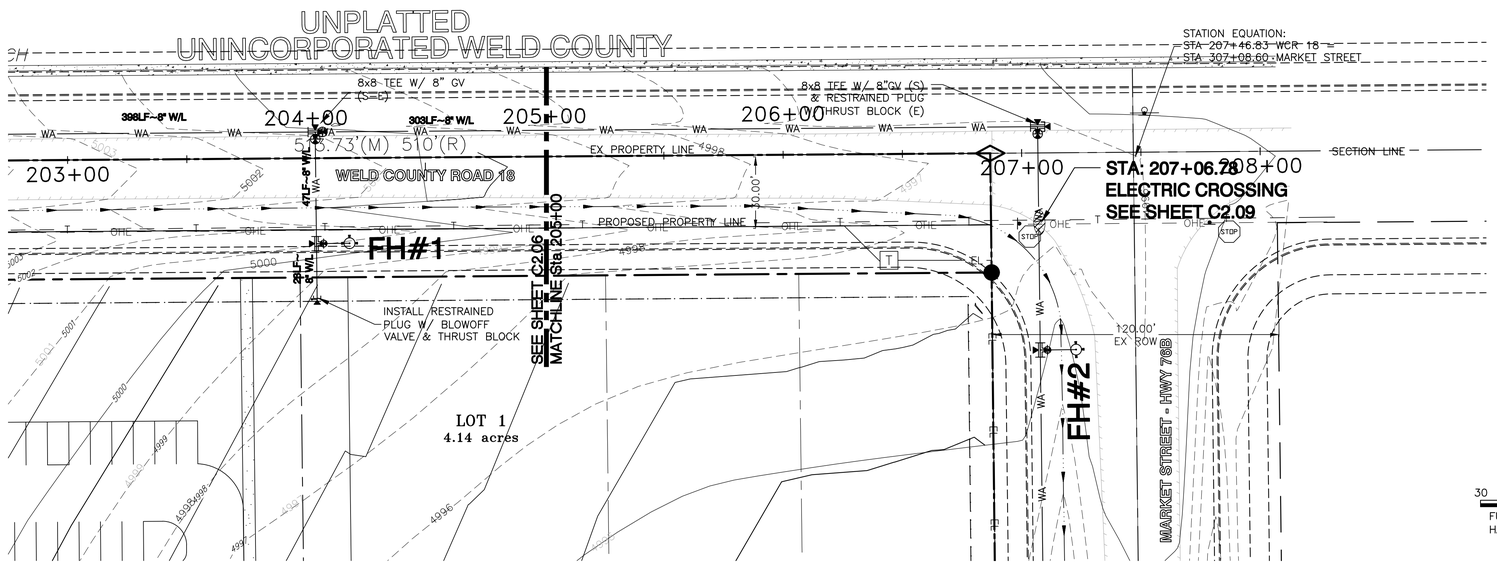

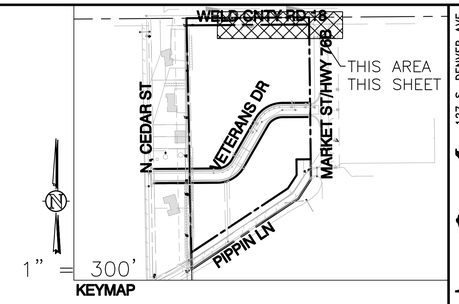

30 15 0 30 60

FULL HORIZONTAL SCALE: 1" = 30'
HALF HORIZONTAL SCALE: 1" = 60'
FULL VERTICAL SCALE: 1" = 3'
HALF VERTICAL SCALE: 1" = 6'

CONTRACTOR TO DEFLECT VERTICAL ALIGNMENT AS NOTED AND SHOWN IN PROFILE VIEW. DEFLECTIONS CAN BE AT JOINTS OR FITTINGS. RESTRAIN EACH JOINT WHERE DEFLECTION OCCURS.

JOINT DEFLECTION SHALL NOT EXCEED 1°

ALL WATER LINE VALVES, BENDS, AND FITTINGS SHALL BE RESTRAINED AND THRUST BLOCKS INSTALLED. SEE ALSO JOINT RESTRAINT TABLE THIS SHEET.

ALL FIRELINE JOINTS AND FITTINGS TO BE RESTRAINED WITH MEGALUGS OR APPROVED EQUAL IN ADDITION TO THRUST BLOCK INSTALLATION.

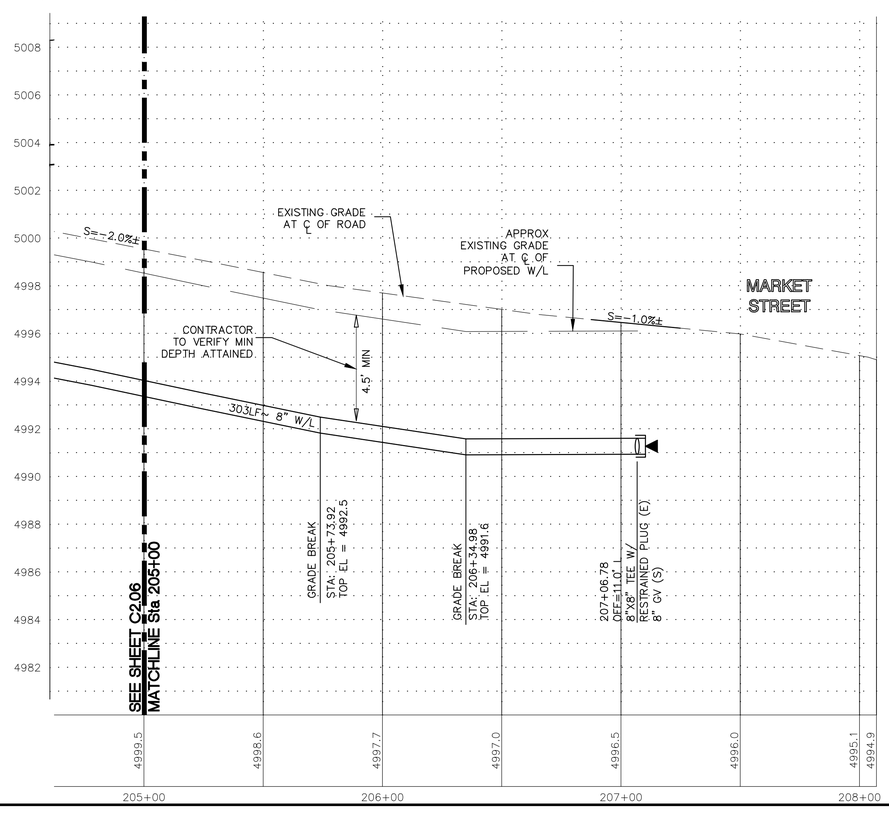

NOTE:

1. SEE COVER SHEET FOR WELD COUNTY ROAD 18 CROSS SECTION.
2. SEE ALSO WATERLINE PLAN & MARKET STREET PLAN & PROFILE FOR W/L IN MARKET STREET.

NOTES

THIS PLAN IS INTENDED AS THE WELD COUNTY RD 18 WATERLINE PLAN & PROFILE FOR MARKET STREET BUSINESS PARK SUBDIVISION.

ALL IMPROVEMENTS ARE PROPOSED UNLESS NOTED AS EXISTING.

IT IS THE OWNER AND/OR THE CONTRACTOR'S RESPONSIBILITY TO ATTAIN ALL APPROPRIATE PERMITS AND REVIEW APPROVALS FROM THE STATE OF COLORADO AND TOWN OF KEENESBURG RESPECTIVELY.

SEE "AS BUILT/BOUNDARY SURVEY" COMPLETED BY AMERICAN WEST LAND SURVEY – DATED MAY 24, 2006.

SEE COVER SHEET FOR PROJECT BENCHMARK AND BASIS OF BEARING.

SITE BENCHMARK WAS ESTABLISHED BEING A 3" BRASS CAP IN CONCRETE LYING FIVE FEET WEST OF A CONCRETE IRRIGATION DITCH NEAR THE INTERSECTION OF COUNTY ROAD 18 AND NORTH CEDAR STREET, AND THIRTY FEET NORTH OF THE CENTERLINE OF COUNTY ROAD 18. STAMPED "NATIONAL GEODETIC SURVEY ACD 1" HAVING AN ELEVATION OF 5008.06 FEET (NAVD 1988)

ANY REFERENCE TO EASEMENTS, SURVEY POINTS, OR EXISTING UTILITIES AND FEATURES ARE BASED SOLELY FROM SURVEY INFORMATION PROVIDED BY OTHERS – SPECIFICALLY PER SAME SURVEY NOTED ABOVE.

NOT ALL UNCC UTILITY LOCATES HAVE BEEN PERFORMED. IT IS THE CONTRACTOR'S RESPONSIBILITY TO VERIFY ALL UTILITIES ARE LOCATED AND SURVEY PROVIDED TO THE OWNER AND ENGINEER PRIOR TO CONSTRUCTION DRAWING RELEASE.

BUILDING SETBACKS FRONT/REAR = 25', SIDES = 10' PER ZONE DISTRICT HIGHWAY COMMERICAL (CH).

SYMBOL LEGEND

45 DEG BEND
22.5 DEG BEND
RESTRAINED PLUG
RESTRAINED TEE
WATER METER
RESTRAINED CROSS
FIRE HYDRANT
RESTRAINED WATER VALVE
PIPE CROSSOVER
MANHOLE
PROPOSED ASPHALT PAVING

LINETYPE LEGEND

LOT / PROPERTY LINE
RIGHT OF WAY LINE
SETBACK
EASEMENT
TO BE ABANDONED LOT LINE
EXISTING BUILDING, CURB
EDGE of ASPHALT
CHAINLINK FENCE
WIRE FENCE
POND WQ W/S
SWALE
EXISTING SWALE
EXISTING OVERHEAD ELEC
EXISTING ELECTICAL LINE
EXISTING STORM LINE
EXISTING SANITARY LINE
EXISTING WATER LINE
EXISTING GAS LINE
EXISTING FIBER OPTIC LINE
EXISTING TELEPHONE LINE

PROPOSED SANITARY LINE
PROPOSED SANITARY SERVICE
PROPOSED STORM LINE
PROPOSED WATER LINE
PROPOSED WATER SERVICE
PROPOSED GAS LINE
PROPOSED ELECTRIC LINE
PROPOSED TELEPHONE LINE

127 S. DENVER AVE
FT. LUPTON, CO 80621
www.westernec.com
email@westernec.com
(720) 685-9951
FAX (720) 294-1330
Western Engineering Consultants, inc LLC

No.	REVISION	DATE	BY
0	PRELIM/FINAL PLAT SUBMITTAL	08/06/19	CFC

KEENE LAND LLC
CONTACT: RICK ROBERTSON
853 W. 5
KEENESBURG, CO 80643
(303)961-0031

WCR 18 WATER LINE PLAN & PROFILE
MARKET STREET BUSINESS PARK SUBDIVISION
TOWN of KEENESBURG, WELD COUNTY, COLORADO

Dig Safely.
CALL UNCC
THREE WORKING DAYS BEFORE YOU DIG
811
www.uncc.org
UTILITY NOTIFICATION CENTER OF COLORADO

COLORADO REGISTERED PROFESSIONAL ENGINEER
FOR REVIEW ONLY
08/06/19
ONLY VALID FOR CONSTRUCTION IF SEAL & ORIGINAL SIGNATURE ARE ON EACH SHEET

INITIAL PLAN RELEASE: 08/06/19
DESIGNED BY: CFC
DRAWN BY: CFC
CHECKED BY: CFC

PROJECT NO. 01-0187.003.00
DOC CON # C2.07-WC18P&P
SHT C2.07

T:\0187_003_00-KEENE LAND-MARKET BUS PARK\Dwg\CDs\0187_003-WECI-CDS-2.00.dwg, C2.07-WCR18P&P, 8/16/2019 3:36:27 PM, DWG To PDF.pc3, WEC 24"36, WEC 24"36

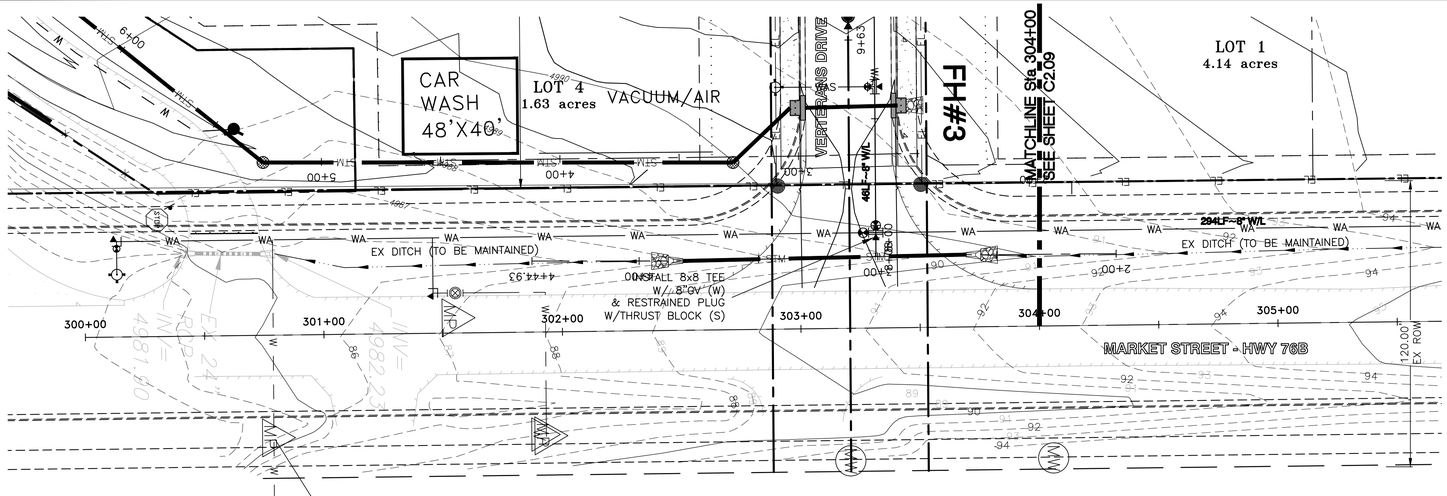

UNPLATTED
HIGHWAY COMMERCIAL

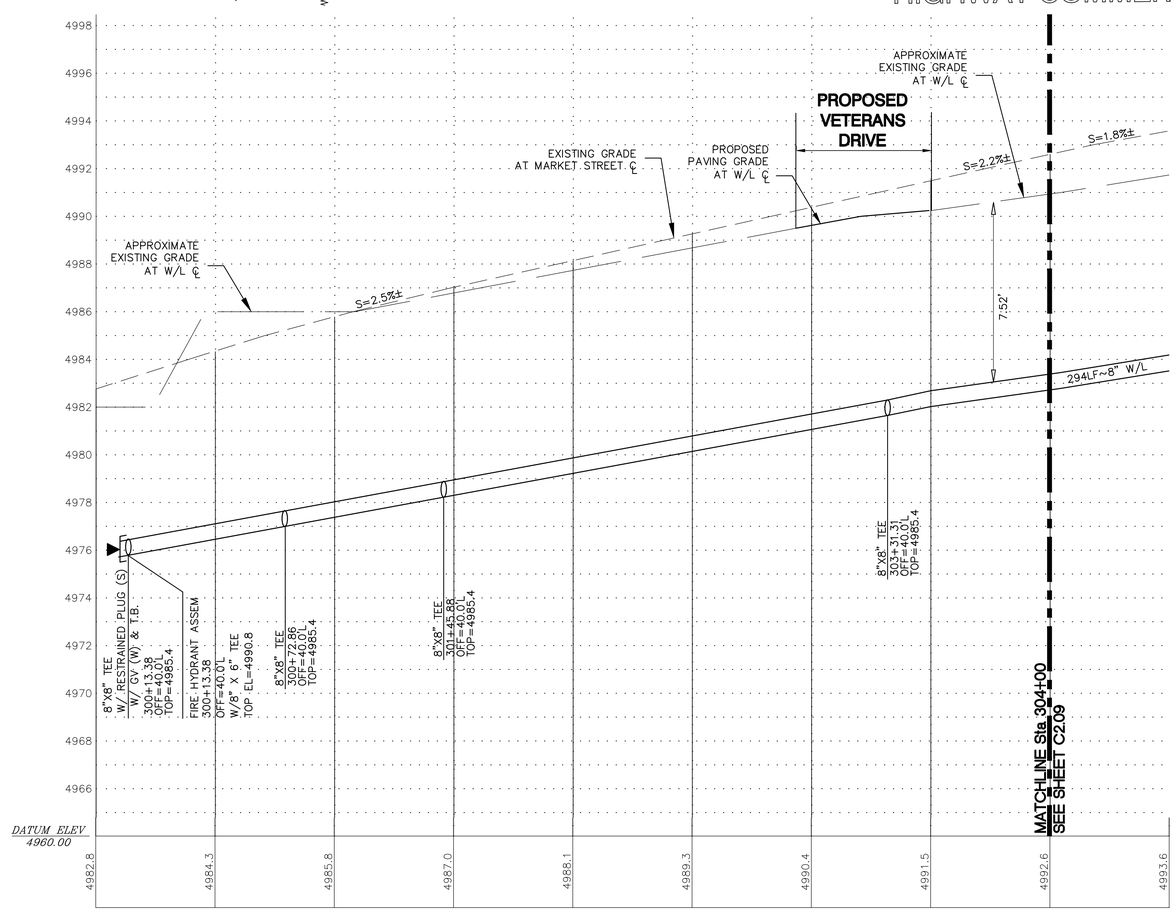

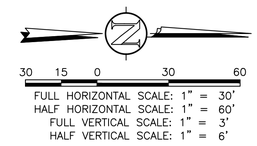

NOTE:
SEE COVER SHEET FOR MARKET STREET SECTION.

SEE ALSO WATERLINE PLAN & MARKET STREET PLAN & PROFILE SHEET 17.

CONTRACTOR TO DEFLECT VERTICAL ALIGNMENT AS NOTED AND SHOWN IN PROFILE VIEW. DEFLECTIONS CAN BE AT JOINTS OR FITTINGS. RESTRAIN EACH JOINT WHERE DEFLECTION OCCURS.

JOINT DEFLECTION SHALL NOT EXCEED 1°

ALL WATER LINE VALVES, BENDS, AND FITTINGS SHALL BE RESTRAINED AND THRUST BLOCKS INSTALLED. SEE ALSO JOINT RESTRAINT TABLE THIS SHEET.

ALL FIRELINE JOINTS AND FITTINGS TO BE RESTRAINED WITH MEGALUGS OR APPROVED EQUAL IN ADDITION TO THRUST BLOCK INSTALLATION.

IF LESS THAN 18" CLEARANCE BETWEEN UTILITY CROSSINGS INSTALL PIPE SUPPORT CROSSING BETWEEN UTILITY CROSSING. MIN. ENCASEMENT OF O.D. + 18" EACH DIRECTION - 3'x3'x20' MIN. FLOWFILL (150 PSI) OF BOTH LINES (10' EACH SIDE OF UTILITY CROSSING)

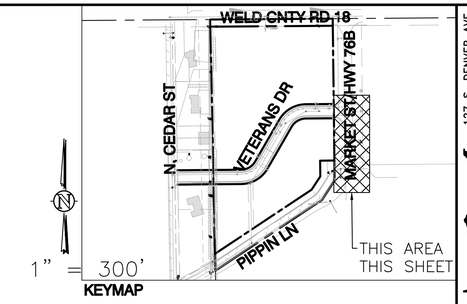

NOTES

THIS PLAN IS INTENDED AS THE MARKET STREET WATERLINE PLAN & PROFILE FOR MARKET STREET BUSINESS PARK SUBDIVISION.

ALL IMPROVEMENTS ARE PROPOSED UNLESS NOTED AS EXISTING.

IT IS THE OWNER AND/OR THE CONTRACTOR'S RESPONSIBILITY TO ATTAIN ALL APPROPRIATE PERMITS AND REVIEW APPROVALS FROM THE STATE OF COLORADO AND TOWN OF KEENESBURG RESPECTIVELY.

SEE "AS BUILT/BOUNDARY SURVEY" COMPLETED BY AMERICAN WEST LAND SURVEY – DATED MAY 24, 2006.

SEE COVER SHEET FOR PROJECT BENCHMARK AND BASIS OF BEARING.

SITE BENCHMARK WAS ESTABLISHED BEING A 3" BRASS CAP IN CONCRETE LYING FIVE FEET WEST OF A CONCRETE IRRIGATION DITCH NEAR THE INTERSECTION OF COUNTY ROAD 18 AND NORTH CEDAR STREET, AND THIRTY FEET NORTH OF THE CENTERLINE OF COUNTY ROAD 18. STAMPED "NATIONAL GEODETIC SURVEY ACD 1" HAVING AN ELEVATION OF 5008.06 FEET (NAVD 1988)

ANY REFERENCE TO EASEMENTS, SURVEY POINTS, OR EXISTING UTILITIES AND FEATURES ARE BASED SOLELY FROM SURVEY INFORMATION PROVIDED BY OTHERS – SPECIFICALLY PER SAME SURVEY NOTED ABOVE.

NOT ALL UNCC UTILITY LOCATES HAVE BEEN PERFORMED. IT IS THE CONTRACTOR'S RESPONSIBILITY TO VERIFY ALL UTILITIES ARE LOCATED AND SURVEY PROVIDED TO THE OWNER AND ENGINEER PRIOR TO CONSTRUCTION DRAWING RELEASE.

BUILDING SETBACKS FRONT/REAR = 25', SIDES = 10' PER ZONE DISTRICT HIGHWAY COMMERICAL (CH).

SYMBOL LEGEND

- 45 DEG BEND
- 22.5 DEG BEND
- RESTRAINED PLUG
- RESTRAINED TEE
- WATER METER
- RESTRAINED CROSS
- FIRE HYDRANT
- RESTRAINED WATER VALVE
- PIPE CROSSOVER
- MANHOLE
- PROPOSED ASPHALT PAVING

LINETYPE LEGEND

- LOT / PROPERTY LINE
- RIGHT OF WAY LINE
- SETBACK
- EASEMENT
- TO BE ABANDONED LOT LINE
- EXISTING BUILDING, CURB
- EDGE of ASPHALT
- CHAINLINK FENCE
- WIRE FENCE
- POND WQ W/S
- SWALE
- EXISTING SWALE
- EXISTING OVERHEAD ELEC
- EXISTING ELECTICAL LINE
- EXISTING STORM LINE
- EXISTING SANITARY LINE
- EXISTING WATER LINE
- EXISTING GAS LINE
- EXISTING FIBER OPTIC LINE
- EXISTING TELEPHONE LINE
- PROPOSED SANITARY LINE
- PROPOSED SANITARY SERVICE
- PROPOSED STORM LINE
- PROPOSED WATER LINE
- PROPOSED WATER SERVICE
- PROPOSED GAS LINE
- PROPOSED ELECTRIC LINE
- PROPOSED TELEPHONE LINE

127 S. DENVER AVE
FT. LUPTON, CO 80621
www.westernec.com
email@westernec.com
(720) 685-9951
FAX (720) 294-1330
Western Engineering Consultants, inc LLC

No.	REVISION	DATE	BY
0	PRELIM/FINAL PLAT SUBMITTAL	08/06/19	CFC

KEENE LAND LLC
CONTACT: RICK ROBERTSON
85 WEST 5
KEENESBURG, CO 80643
(303)961-0031

MARKET ST. WATER LINE PLAN & PROFILE
MARKET STREET BUSINESS PARK SUBDIVISION
TOWN of KEENESBURG, WELD COUNTY, COLORADO

Dig Safely.
CALL UNCC
THREE WORKING DAYS BEFORE YOU DIG
811
www.uncc.org
UTILITY NOTIFICATION CENTER OF COLORADO

COLORADO REGISTERED PROFESSIONAL ENGINEER
CHAWIN F. CHOY
FOR
33802
REVIEW ONLY
08/06/19
ONLY VALID FOR CONSTRUCTION IF SEAL & ORIGINAL SIGNATURE ARE ON EACH SHEET

INITIAL PLAN RELEASE: 08/06/19
DESIGNED BY: CFC
DRAWN BY: CFC
CHECKED BY: CFC
PROJECT NO. 01-0187.003.00
DOC CON # C2.08-MRKP&P
SHT C2.08

T:\0187_003_00-KEENE LAND-MARKET BUS PARK\Dwg\CDs\0187_003-WECI-CDS-2.00.dwg, C2.08-MRKTP&P, 8/16/2019 3:36:37 PM, _DWG To PDF.pc3, WEC 24"36, WEC 24"36

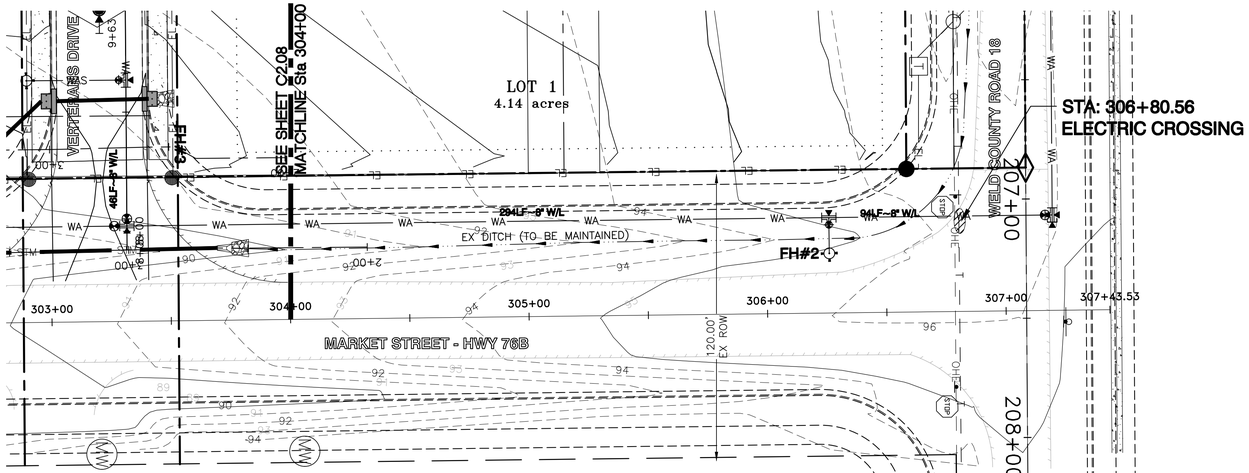

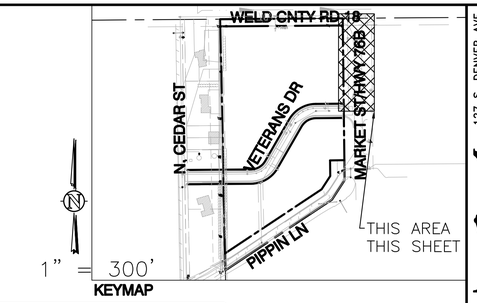

IF LESS THAN 18" CLEARANCE BETWEEN UTILITY CROSSINGS INSTALL PIPE SUPPORT CROSSING BETWEEN UTILITY CROSSING. MIN. ENCASEMENT OF O.D. + 18" EACH DIRECTION - 3'x3'x20' MIN. FLOWFILL (150 PSI) OF BOTH LINES (10' EACH SIDE OF UTILITY CROSSING)

UNPLATTED
HIGHWAY COMMERCIAL

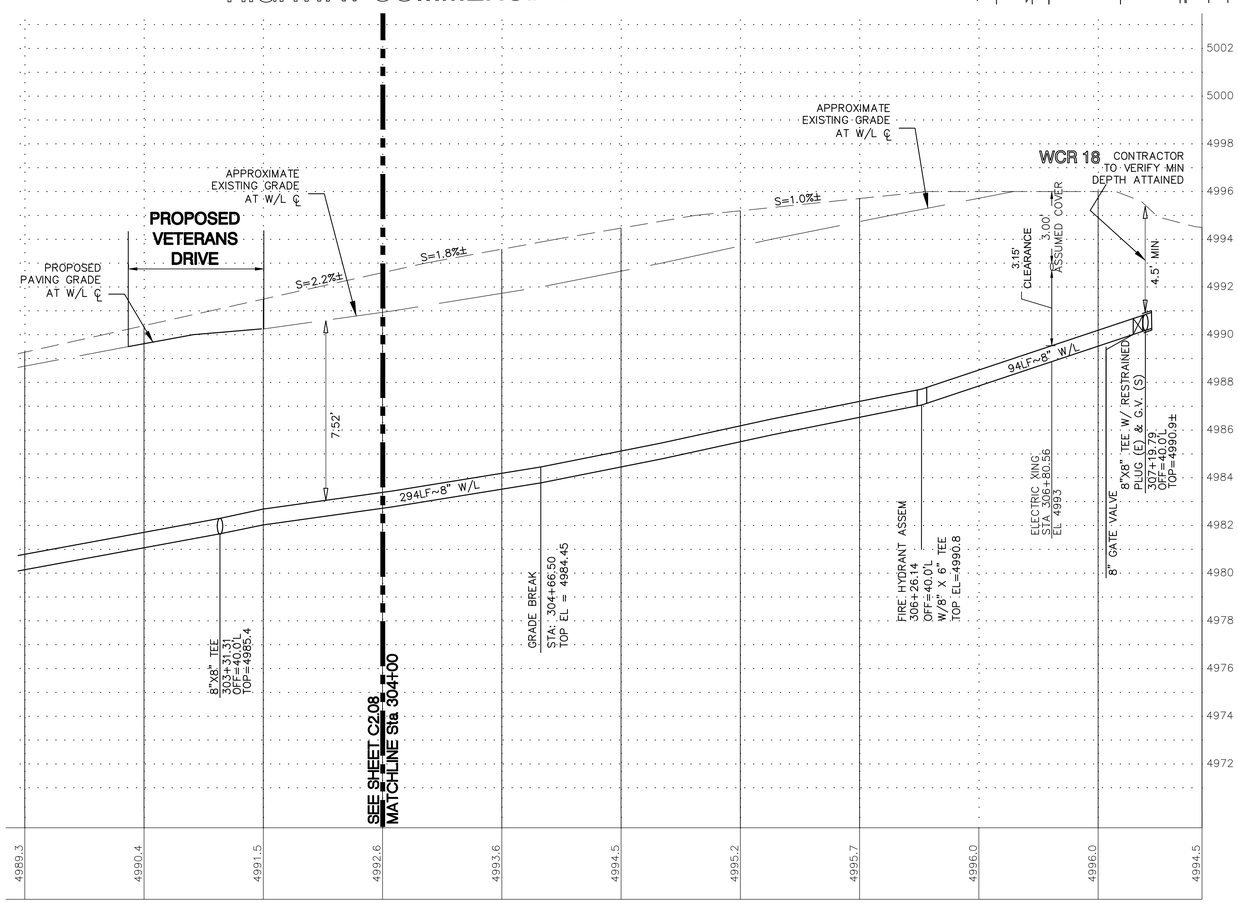

30 15 0 30 60

FULL HORIZONTAL SCALE: 1" = 30'
HALF HORIZONTAL SCALE: 1" = 60'
FULL VERTICAL SCALE: 1" = 3'
HALF VERTICAL SCALE: 1" = 6'

NOTE:
SEE COVER SHEET FOR MARKET STREET SECTION.

CONTRACTOR TO DEFLECT VERTICAL ALIGNMENT AS NOTED AND SHOWN IN PROFILE VIEW. DEFLECTIONS CAN BE AT JOINTS OR FITTINGS. RESTRAIN EACH JOINT WHERE DEFLECTION OCCURS.

JOINT DEFLECTION SHALL NOT EXCEED 1°

ALL WATER LINE VALVES, BENDS, AND FITTINGS SHALL BE RESTRAINED AND THRUST BLOCKS INSTALLED. SEE ALSO JOINT RESTRAINT TABLE THIS SHEET.

ALL FIRELINE JOINTS AND FITTINGS TO BE RESTRAINED WITH MEGALUGS OR APPROVED EQUAL IN ADDITION TO THRUST BLOCK INSTALLATION.

NOTES

THIS PLAN IS INTENDED AS THE MARKET STREET WATERLINE PLAN & PROFILE FOR MARKET STREET BUSINESS PARK SUBDIVISION.

ALL IMPROVEMENTS ARE PROPOSED UNLESS NOTED AS EXISTING.

IT IS THE OWNER AND/OR THE CONTRACTOR'S RESPONSIBILITY TO ATTAIN ALL APPROPRIATE PERMITS AND REVIEW APPROVALS FROM THE STATE OF COLORADO AND TOWN OF KEENESBURG RESPECTIVELY.

SEE "AS BUILT/BOUNDARY SURVEY" COMPLETED BY AMERICAN WEST LAND SURVEY – DATED MAY 24, 2006.

SEE COVER SHEET FOR PROJECT BENCHMARK AND BASIS OF BEARING.

SITE BENCHMARK WAS ESTABLISHED BEING A 3" BRASS CAP IN CONCRETE LYING FIVE FEET WEST OF A CONCRETE IRRIGATION DITCH NEAR THE INTERSECTION OF COUNTY ROAD 18 AND NORTH CEDAR STREET, AND THIRTY FEET NORTH OF THE CENTERLINE OF COUNTY ROAD 18. STAMPED "NATIONAL GEODETIC SURVEY ACD 1" HAVING AN ELEVATION OF 5008.06 FEET (NAVD 1988)

ANY REFERENCE TO EASEMENTS, SURVEY POINTS, OR EXISTING UTILITIES AND FEATURES ARE BASED SOLELY FROM SURVEY INFORMATION PROVIDED BY OTHERS – SPECIFICALLY PER SAME SURVEY NOTED ABOVE.

NOT ALL UNCC UTILITY LOCATES HAVE BEEN PERFORMED. IT IS THE CONTRACTOR'S RESPONSIBILITY TO VERIFY ALL UTILITIES ARE LOCATED AND SURVEY PROVIDED TO THE OWNER AND ENGINEER PRIOR TO CONSTRUCTION DRAWING RELEASE.

BUILDING SETBACKS FRONT/REAR = 25', SIDES = 10' PER ZONE DISTRICT HIGHWAY COMMERICAL (CH).

SYMBOL LEGEND

- 45 DEG BEND
- 22.5 DEG BEND
- RESTRAINED PLUG
- RESTRAINED TEE
- WATER METER
- RESTRAINED CROSS
- FIRE HYDRANT
- RESTRAINED WATER VALVE
- PIPE CROSSOVER
- MANHOLE
- PROPOSED ASPHALT PAVING

LINETYPE LEGEND

- LOT / PROPERTY LINE
- RIGHT OF WAY LINE
- SETBACK
- EASEMENT
- TO BE ABANDONED LOT LINE
- EXISTING BUILDING, CURB
- EDGE of ASPHALT
- CHAINLINK FENCE
- WIRE FENCE
- POND WQ W/S
- SWALE
- EXISTING SWALE
- EXISTING OVERHEAD ELEC
- EXISTING ELECTICAL LINE
- EXISTING STORM LINE
- EXISTING SANITARY LINE
- EXISTING WATER LINE
- EXISTING GAS LINE
- EXISTING FIBER OPTIC LINE
- EXISTING TELEPHONE LINE
- PROPOSED SANITARY LINE
- PROPOSED SANITARY SERVICE
- PROPOSED STORM LINE
- PROPOSED WATER LINE
- PROPOSED WATER SERVICE
- PROPOSED GAS LINE
- PROPOSED ELECTRIC LINE
- PROPOSED TELEPHONE LINE

Western Engineering Consultants, inc LLC
127 S. DENVER AVE
FT. LUPTON, CO 80621
www.westernec1.com
enoc@westernec1.com
(720) 685-9951
FAX (720) 294-1330

No.	REVISION	DATE	BY
0	PRELIM/FINAL PLAT SUBMITTAL	08/06/19	CFC

KEENE LAND LLC
CONTACT: RICK ROBERTSON
853 W 5
KEENESBURG, CO 80643
(303)961-0031

MARKET ST. WATER LINE PLAN & PROFILE
MARKET STREET BUSINESS PARK SUBDIVISION
TOWN of KEENESBURG, WELD COUNTY, COLORADO

Dig Safely.
CALL UNCC
THREE WORKING DAYS BEFORE YOU DIG
811
www.uncc.org
UTILITY NOTIFICATION CENTER OF COLORADO

COLORADO REGISTERED PROFESSIONAL ENGINEER
CHAWIN P. [illegible]
FOR
33802
REVIEW ONLY
08/06/19
ONLY VALID FOR CONSTRUCTION IF SEAL & ORIGINAL SIGNATURE ARE ON EACH SHEET

INITIAL PLAN RELEASE: 08/06/19
DESIGNED BY: CFC
DRAWN BY: CFC
CHECKED BY: CFC
PROJECT NO. 01-0187.003.00
DOC CON # C2.09-MRKP&P
SHT C2.09

T:\0187_003_00-KEENE LAND-MARKET BUS PARK\Dwg\CDs\0187_003-WEC\-CDS-2.00.dwg, C2.09-MRKTP&P, 8/16/2019 3:36:47 PM, , DWG To PDF.pc3, WEC 24"36, WEC 24"36

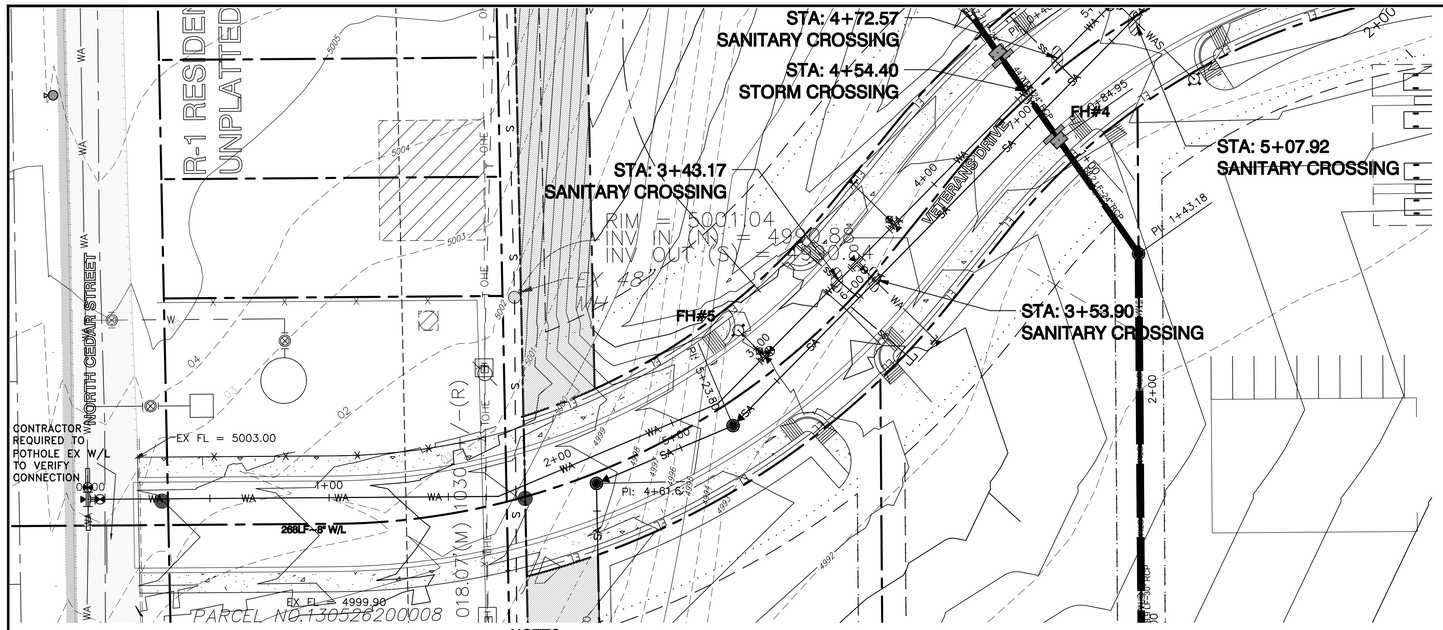

CONTRACTOR TO DEFLECT VERTICAL ALIGNMENT AS NOTED AND SHOWN IN PROFILE VIEW. DEFLECTIONS CAN BE AT JOINTS OR FITTINGS. RESTRAIN EACH JOINT WHERE DEFLECTION OCCURS.

JOINT DEFLECTION SHALL NOT EXCEED 1°

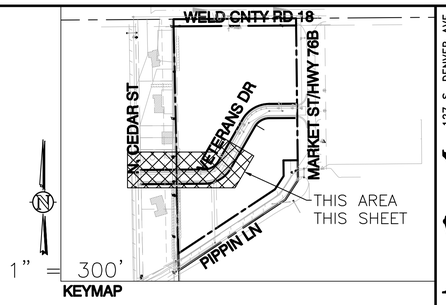

FULL HORIZONTAL SCALE: 1" = 30'
HALF HORIZONTAL SCALE: 1" = 60'
FULL VERTICAL SCALE: 1" = 3'
HALF VERTICAL SCALE: 1" = 6'

NOTES:

1. SEE COVER SHEET FOR PROPOSED VETERANS DRIVE SECTION.
2. SEE ALSO SANITARY PLAN & PROFILE SHEETS C2.02–C2.05 THIS SET.

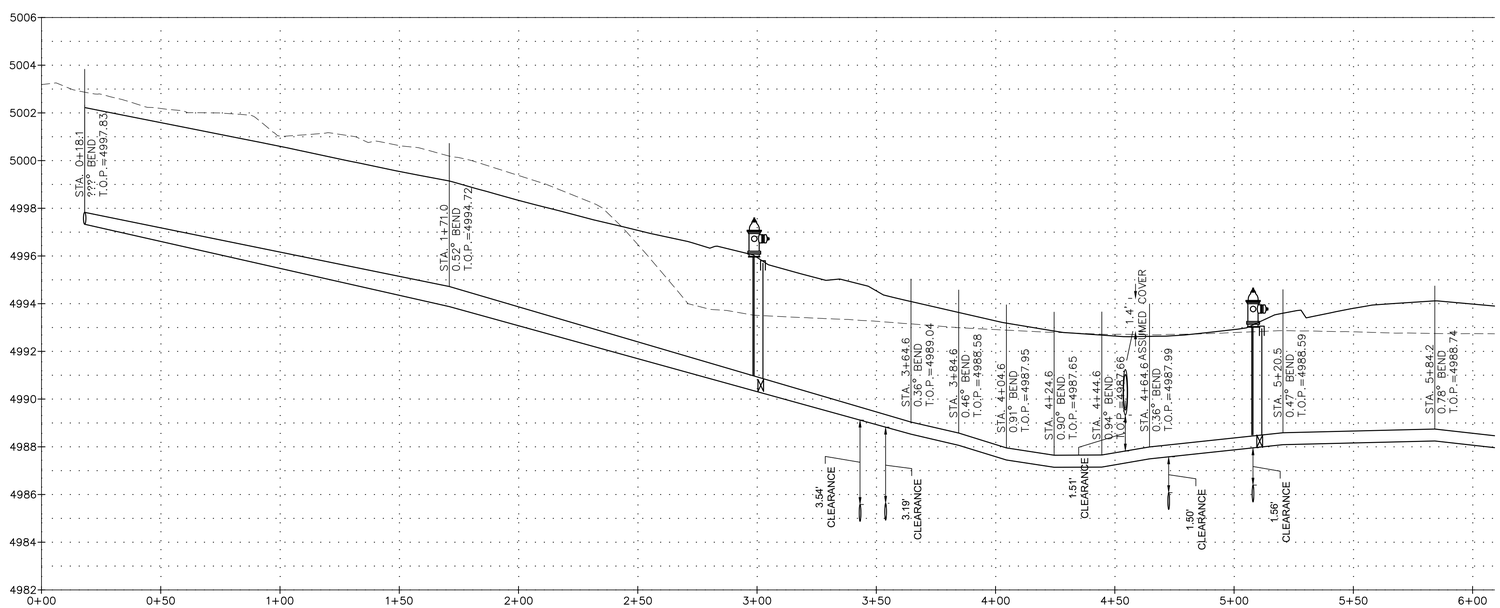

ALL WATER LINE VALVES, BENDS, AND FITTINGS SHALL BE RESTRAINED AND THRUST BLOCKS INSTALLED. SEE ALSO JOINT RESTRAINT TABLE THIS SHEET.

ALL FIRELINE JOINTS AND FITTINGS TO BE RESTRAINED WITH MEGALUGS OR APPROVED EQUAL IN ADDITION TO THRUST BLOCK INSTALLATION.

IF LESS THAN 18" CLEARANCE BETWEEN UTILITY CROSSINGS INSTALL PIPE SUPPORT CROSSING BETWEEN UTILITY CROSSING. MIN. ENCASEMENT OF O.D. + 18" EACH DIRECTION - 3'x3'x20' MIN. FLOWFILL (150 PSI) OF BOTH LINES (10' EACH SIDE OF UTILITY CROSSING)

NOTES

THIS PLAN IS INTENDED AS THE VETERAN'S DRIVE WATERLINE PLAN & PROFILE FOR MARKET STREET BUSINESS PARK SUBDIVISION.

ALL IMPROVEMENTS ARE PROPOSED UNLESS NOTED AS EXISTING.

IT IS THE OWNER AND/OR THE CONTRACTOR'S RESPONSIBILITY TO ATTAIN ALL APPROPRIATE PERMITS AND REVIEW APPROVALS FROM THE STATE OF COLORADO AND TOWN OF KEENESBURG RESPECTIVELY.

SEE "AS BUILT/BOUNDARY SURVEY" COMPLETED BY AMERICAN WEST LAND SURVEY – DATED MAY 24, 2006.

SEE COVER SHEET FOR PROJECT BENCHMARK AND BASIS OF BEARING.

SITE BENCHMARK WAS ESTABLISHED BEING A 3" BRASS CAP IN CONCRETE LYING FIVE FEET WEST OF A CONCRETE IRRIGATION DITCH NEAR THE INTERSECTION OF COUNTY ROAD 18 AND NORTH CEDAR STREET, AND THIRTY FEET NORTH OF THE CENTERLINE OF COUNTY ROAD 18. STAMPED "NATIONAL GEODETIC SURVEY ACD 1" HAVING AN ELEVATION OF 5008.06 FEET (NAVD 1988)

ANY REFERENCE TO EASEMENTS, SURVEY POINTS, OR EXISTING UTILITIES AND FEATURES ARE BASED SOLELY FROM SURVEY INFORMATION PROVIDED BY OTHERS – SPECIFICALLY PER SAME SURVEY NOTED ABOVE.

NOT ALL UNCC UTILITY LOCATES HAVE BEEN PERFORMED. IT IS THE CONTRACTOR'S RESPONSIBILITY TO VERIFY ALL UTILITIES ARE LOCATED AND SURVEY PROVIDED TO THE OWNER AND ENGINEER PRIOR TO CONSTRUCTION DRAWING RELEASE.

BUILDING SETBACKS FRONT/REAR = 25', SIDES = 10' PER ZONE DISTRICT HIGHWAY COMMERICAL (CH).

SYMBOL LEGEND

- 45 DEG BEND
- 22.5 DEG BEND
- RESTRAINED PLUG
- RESTRAINED TEE
- WATER METER
- RESTRAINED CROSS
- FIRE HYDRANT
- RESTRAINED WATER VALVE
- PIPE CROSSOVER
- MANHOLE
- PROPOSED ASPHALT PAVING

LINETYPE LEGEND

- LOT / PROPERTY LINE
- RIGHT OF WAY LINE
- SETBACK
- EASEMENT
- TO BE ABANDONED LOT LINE
- EXISTING BUILDING, CURB
- EDGE of ASPHALT
- CHAINLINK FENCE
- WIRE FENCE
- POND WQ W/S
- SWALE
- EXISTING SWALE
- EXISTING OVERHEAD ELEC
- EXISTING ELECTICAL LINE
- EXISTING STORM LINE
- EXISTING SANITARY LINE
- EXISTING WATER LINE
- EXISTING GAS LINE
- EXISTING FIBER OPTIC LINE
- EXISTING TELEPHONE LINE
- PROPOSED SANITARY LINE
- PROPOSED SANITARY SERVICE
- PROPOSED STORM LINE
- PROPOSED WATER LINE
- PROPOSED WATER SERVICE
- PROPOSED GAS LINE
- PROPOSED ELECTRIC LINE
- PROPOSED TELEPHONE LINE

127 S. DENVER AVE
FT. LUPTON, CO 80621
www.westernec.com
email@westernec.com
(720) 685-9951
FAX (720) 294-1330
Western Engineering Consultants, inc LLC

No.	REVISION	DATE	BY
0	PRELIM/FINAL PLAT SUBMITTAL	08/06/19	CFC

KEENE LAND LLC
CONTACT: RICK ROBERTSON
853 WEST 5
KEENESBURG, CO 80643
(303)961-0031

VETERANS DR. & WATERLINE PLAN&PROFILE
MARKET STREET BUSINESS PARK SUBDIVISION
TOWN of KEENESBURG, WELD COUNTY, COLORADO

Dig Safely.
CALL UNCC
THREE WORKING DAYS BEFORE YOU DIG
811
www.uncc.org
UTILITY NOTIFICATION CENTER OF COLORADO

COLORADO REGISTERED PROFESSIONAL ENGINEER
CHRISTOPHER FOX CARY
FOR REVIEW ONLY
08/06/19
33802
ONLY VALID FOR CONSTRUCTION IF SEAL & ORIGINAL SIGNATURE ARE ON EACH SHEET

INITIAL PLAN RELEASE: 08/06/19
DESIGNED BY: CFC
DRAWN BY: CFC
CHECKED BY: CFC
PROJECT NO. 01-0187.003.00
DOC CON # C2.10-VETP&P
SHT C2.10

T:\0187_003_00\KEENE LAND-MARKET BUS PARK\Dwg\CDs\0187_003-WECI-CDS-2.00.dwg, C2.10-VETDRP&P, 8/16/2019 3:36:58 PM, _DWG To PDF.pc3, WEC 24"36, WEC 24"36

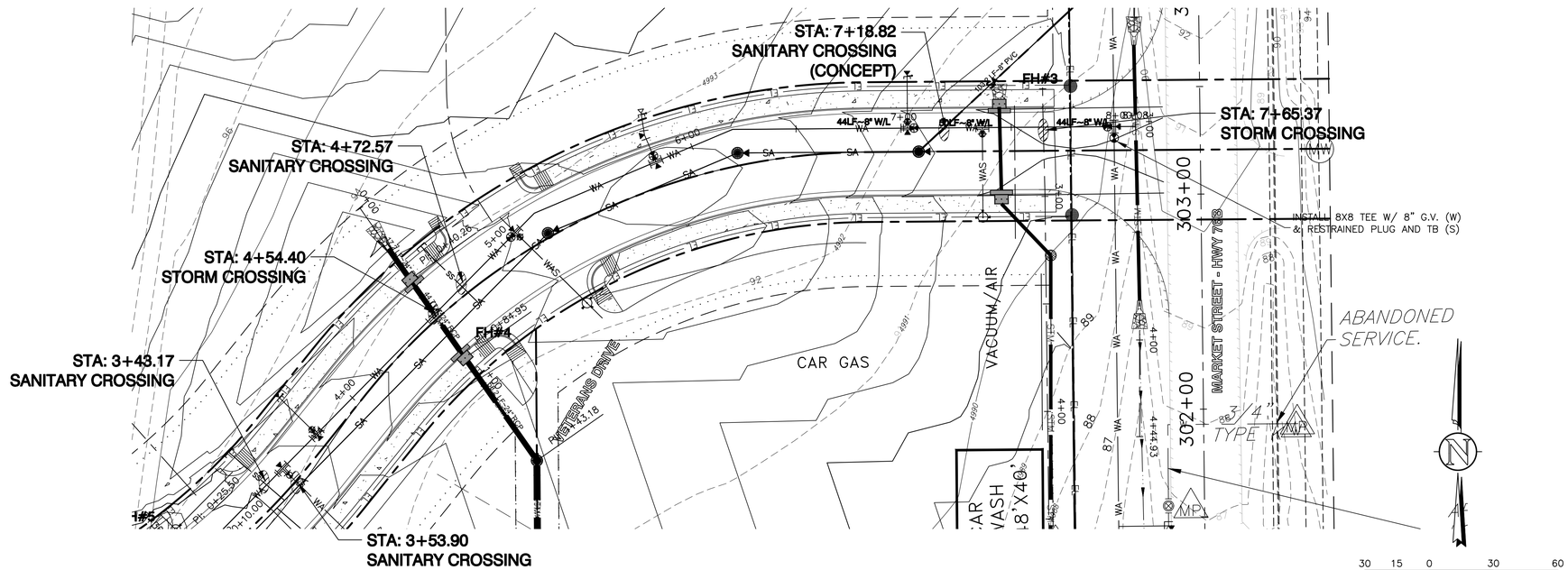

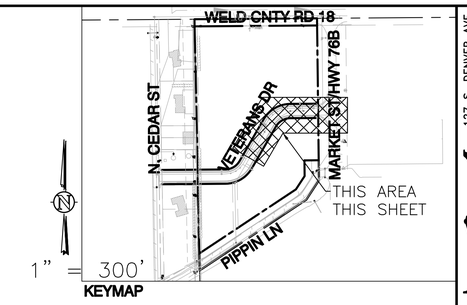

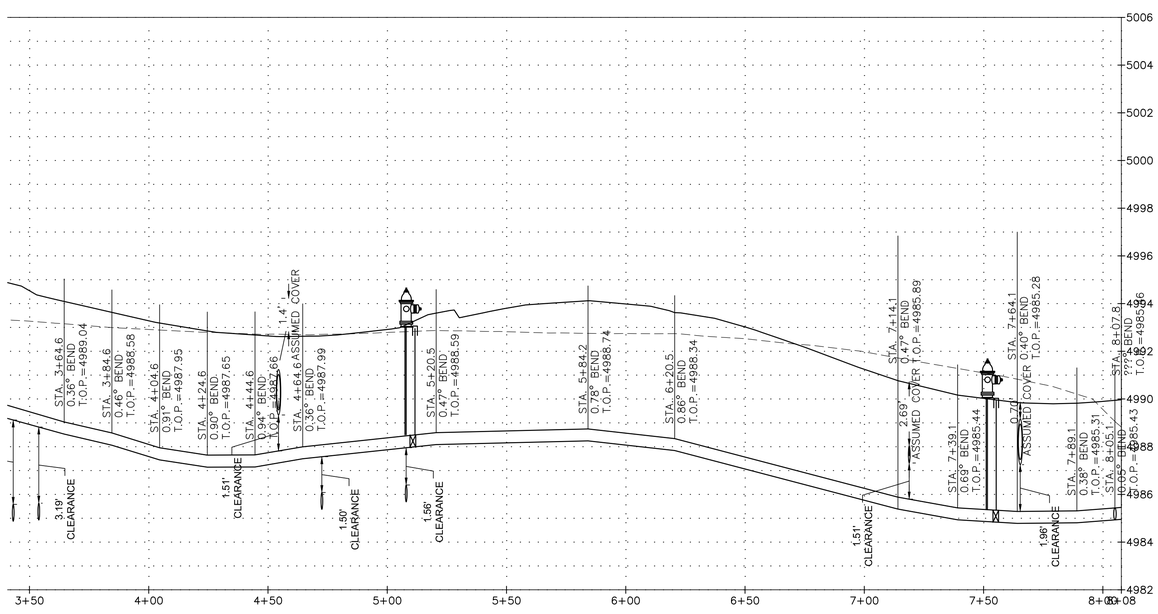

CONTRACTOR TO DEFLECT VERTICAL ALIGNMENT AS NOTED AND SHOWN IN PROFILE VIEW. DEFLECTIONS CAN BE AT JOINTS OR FITTINGS. RESTRAIN EACH JOINT WHERE DEFLECTION OCCURS.

JOINT DEFLECTION SHALL NOT EXCEED 1°

NOTES

THIS PLAN IS INTENDED AS THE VETERAN'S DRIVE WATERLINE PLAN & PROFILE FOR MARKET STREET BUSINESS PARK SUBDIVISION.

ALL IMPROVEMENTS ARE PROPOSED UNLESS NOTED AS EXISTING.

IT IS THE OWNER AND/OR THE CONTRACTOR'S RESPONSIBILITY TO ATTAIN ALL APPROPRIATE PERMITS AND REVIEW APPROVALS FROM THE STATE OF COLORADO AND TOWN OF KEENESBURG RESPECTIVELY.

SEE "AS BUILT/BOUNDARY SURVEY" COMPLETED BY AMERICAN WEST LAND SURVEY – DATED MAY 24, 2006.

SEE COVER SHEET FOR PROJECT BENCHMARK AND BASIS OF BEARING.

SITE BENCHMARK WAS ESTABLISHED BEING A 3" BRASS CAP IN CONCRETE LYING FIVE FEET WEST OF A CONCRETE IRRIGATION DITCH NEAR THE INTERSECTION OF COUNTY ROAD 18 AND NORTH CEDAR STREET, AND THIRTY FEET NORTH OF THE CENTERLINE OF COUNTY ROAD 18. STAMPED "NATIONAL GEODETIC SURVEY ACD 1" HAVING AN ELEVATION OF 5008.06 FEET (NAVD 1988)

ANY REFERENCE TO EASEMENTS, SURVEY POINTS, OR EXISTING UTILITIES AND FEATURES ARE BASED SOLELY FROM SURVEY INFORMATION PROVIDED BY OTHERS – SPECIFICALLY PER SAME SURVEY NOTED ABOVE.

NOT ALL UNCC UTILITY LOCATES HAVE BEEN PERFORMED. IT IS THE CONTRACTOR'S RESPONSIBILITY TO VERIFY ALL UTILITIES ARE LOCATED AND SURVEY PROVIDED TO THE OWNER AND ENGINEER PRIOR TO CONSTRUCTION DRAWING RELEASE.

BUILDING SETBACKS FRONT/REAR = 25', SIDES = 10' PER ZONE DISTRICT HIGHWAY COMMERICAL (CH).

SYMBOL LEGEND

45 DEG BEND
22.5 DEG BEND
RESTRAINED PLUG
RESTRAINED TEE
WATER METER
EXISTING METER PIT
EXISTING MONITORING WELL
RESTRAINED CROSS
FIRE HYDRANT
RESTRAINED WATER VALVE
PIPE CROSSOVER
MANHOLE
PROPOSED ASPHALT PAVING

LINETYPE LEGEND

LOT / PROPERTY LINE
RIGHT OF WAY LINE
SETBACK
EASEMENT
TO BE ABANDONED LOT LINE
EXISTING BUILDING, CURB
EDGE of ASPHALT
CHAINLINK FENCE
WIRE FENCE
POND WQ W/S
SWALE
EXISTING SWALE
EXISTING OVERHEAD ELEC
EXISTING ELECTICAL LINE
EXISTING STORM LINE
EXISTING SANITARY LINE
EXISTING WATER LINE
EXISTING GAS LINE
EXISTING FIBER OPTIC LINE
EXISTING TELEPHONE LINE

PROPOSED SANITARY LINE
PROPOSED SANITARY SERVICE
PROPOSED STORM LINE
PROPOSED WATER LINE
PROPOSED WATER SERVICE
PROPOSED GAS LINE
PROPOSED ELECTRIC LINE
PROPOSED TELEPHONE LINE

ALL WATER LINE VALVES, BENDS, AND FITTINGS SHALL BE RESTRAINED AND THRUST BLOCKS INSTALLED. SEE ALSO JOINT RESTRAINT TABLE THIS SHEET.

ALL FIRELINE JOINTS AND FITTINGS TO BE RESTRAINED WITH MEGALUGS OR APPROVED EQUAL IN ADDITION TO THRUST BLOCK INSTALLATION.

IF LESS THAN 18" CLEARANCE BETWEEN UTILITY CROSSINGS INSTALL PIPE SUPPORT CROSSING BETWEEN UTILITY CROSSING. MIN. ENCASEMENT OF O.D. + 18" EACH DIRECTION - 3'x3'x20' MIN. FLOWFILL (150 PSI) OF BOTH LINES (10' EACH SIDE OF UTILITY CROSSING)

127 S. DENVER AVE
FT. LUPTON, CO 80621
www.westernec.com
email@westernec.com
(720) 685-9951
FAX (720) 294-1330
Western Engineering Consultants, inc LLC

No.	REVISION	DATE	BY
0	PRELIM/FINAL PLAT SUBMITTAL	08/06/19	CFC

KEENE LAND LLC
CONTACT: RICK ROBERTSON
853 W 6th
KEENESBURG, CO 80643
(303)961-0031

VETERANS DR. WATERLINE PLAN&PROFILE
MARKET STREET BUSINESS PARK SUBDIVISION
TOWN of KEENESBURG, WELD COUNTY, COLORADO

Dig Safely.
CALL UNCC
THREE WORKING DAYS BEFORE YOU DIG
811
www.uncc.org
UTILITY NOTIFICATION CENTER OF COLORADO

COLORADO REGISTERED PROFESSIONAL ENGINEER
CHAUNTA F. CRAY
FOR
33802
REVIEW ONLY
08/06/19
ONLY VALID FOR CONSTRUCTION IF SEAL & ORIGINAL SIGNATURE ARE ON DOCUMENT

INITIAL PLAN RELEASE: 08/06/19
DESIGNED BY: CFC
DRAWN BY: CFC
CHECKED BY: CFC
PROJECT NO. 01-0187.003.00
DOC CON # C2.11-VETP&P
SHT C2.11

T:\0187_003_00\KEENE LAND-MARKET BUS PARK\Dwg\CDs\0187_003-WECI-CDS-2.00.dwg, C2.11-VETDRP&P, 8/16/2019 3:37:07 PM, _DWG To PDF.pc3, WEC 24'36, WEC 24'36

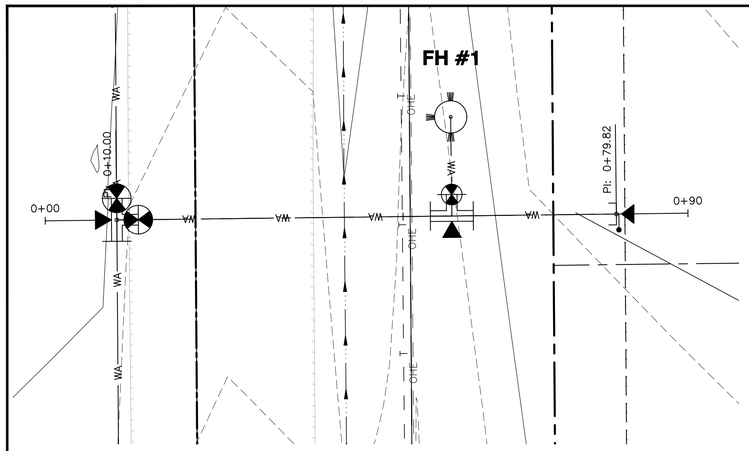

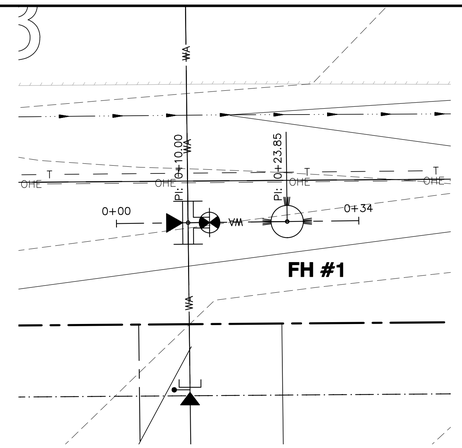

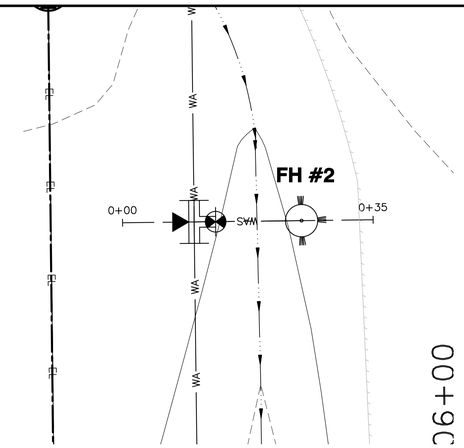

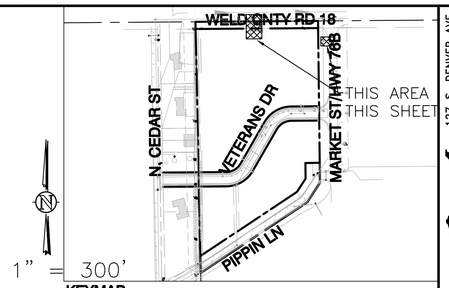

10 5 0 10 20

FULL HORIZONTAL SCALE: 1" = 10'
HALF HORIZONTAL SCALE: 1" = 20'
FULL VERTICAL SCALE: 1" = 1'
HALF VERTICAL SCALE: 1" = 2'

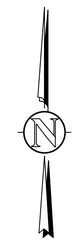

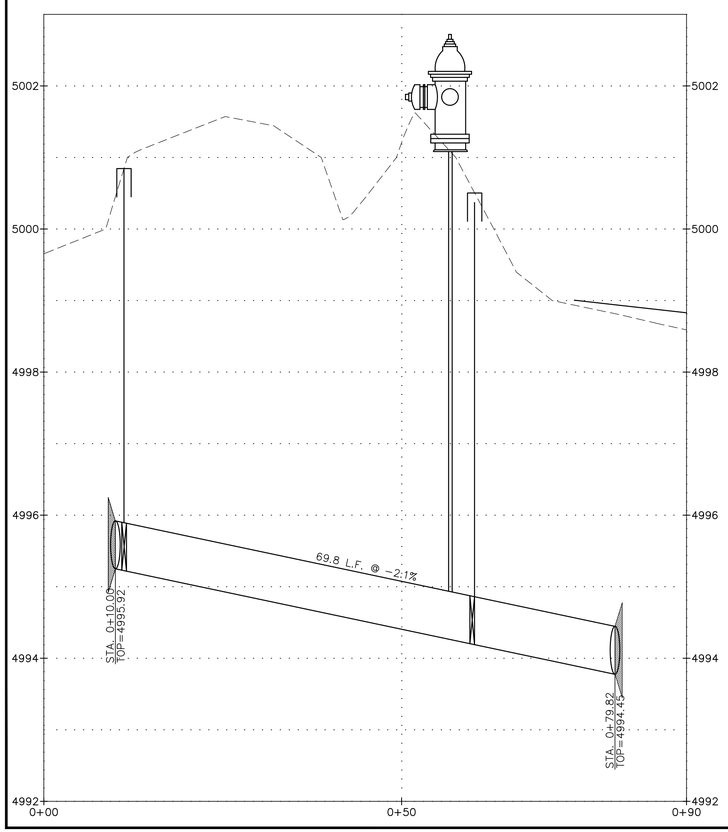

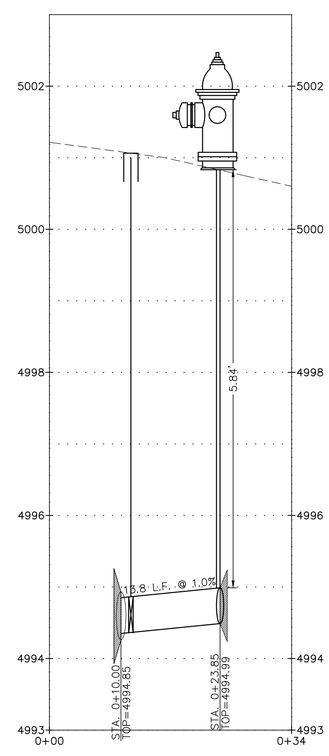

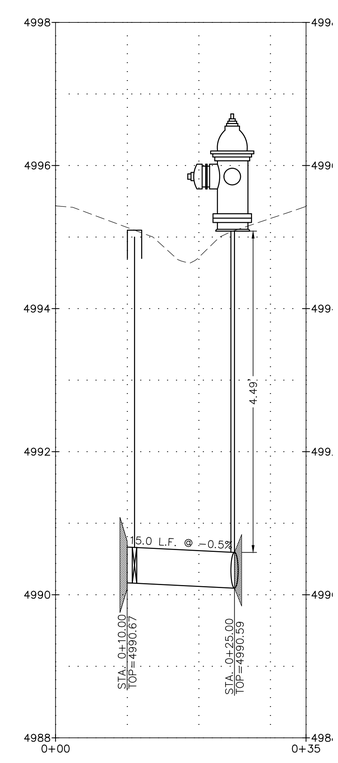

JOINT DEFLECTION SHALL NOT EXCEED 1°

CONTRACTOR TO DEFLECT VERTICAL ALIGNMENT AS NOTED AND SHOWN IN PROFILE VIEW. DEFLECTIONS CAN BE AT JOINTS OR FITTINGS. RESTRAIN EACH JOINT WHERE DEFLECTION OCCURS.

ALL FIRELINE JOINTS AND FITTINGS TO BE RESTRAINED WITH MEGALUGS OR APPROVED EQUAL IN ADDITION TO THRUST BLOCK INSTALLATION.

ALL WATER LINE VALVES, BENDS, AND FITTINGS SHALL BE RESTRAINED AND THRUST BLOCKS INSTALLED. SEE ALSO JOINT RESTRAINT TABLE THIS SHEET.

IF LESS THAN 18" CLEARANCE BETWEEN UTILITY CROSSINGS INSTALL PIPE SUPPORT CROSSING BETWEEN UTILITY CROSSING. MIN. ENCASEMENT OF O.D. + 18" EACH DIRECTION - 3'x3'x20' MIN. FLOWFILL (150 PSI) OF BOTH LINES (10' EACH SIDE OF UTILITY CROSSING)

SYMBOL LEGEND

- 45 DEG BEND
- 22.5 DEG BEND
- RESTRAINED PLUG
- RESTRAINED TEE
- WATER METER
- RESTRAINED CROSS
- FIRE HYDRANT
- RESTRAINED WATER VALVE
- PIPE CROSSOVER
- MANHOLE
- PROPOSED ASPHALT PAVING

LINETYPE LEGEND

- LOT / PROPERTY LINE
- RIGHT OF WAY LINE
- SETBACK
- EASEMENT
- TO BE ABANDONED LOT LINE
- EXISTING BUILDING, CURB
- EDGE of ASPHALT
- CHAINLINK FENCE
- WIRE FENCE
- POND WQ W/S
- SWALE
- EXISTING SWALE
- EXISTING OVERHEAD ELEC
- EXISTING ELECTICAL LINE
- EXISTING STORM LINE
- EXISTING SANITARY LINE
- EXISTING WATER LINE
- EXISTING GAS LINE
- EXISTING FIBER OPTIC LINE
- EXISTING TELEPHONE LINE
- PROPOSED SANITARY LINE
- PROPOSED SANITARY SERVICE
- PROPOSED STORM LINE
- PROPOSED WATER LINE
- PROPOSED WATER SERVICE
- PROPOSED GAS LINE
- PROPOSED ELECTRIC LINE
- PROPOSED TELEPHONE LINE

127 S. DENVER AVE
FT. LUPTON, CO 80621
www.westernec.com
email@westernec.com
(720) 685-9951
FAX (720) 294-1330
Western Engineering Consultants, inc LLC

No.	REVISION	DATE	BY
0	PRELIM/FINAL PLAT SUBMITTAL	08/06/19	CFC

KEENE LAND LLC
CONTACT: RICK ROBERTSON
853 WCR 5
KEENESBURG, CO 80643
(303)961-0031

WCR 18 WATERLINE & FH PLAN & PROFILE
MARKET STREET BUSINESS PARK SUBDIVISION
TOWN of KEENESBURG, WELD COUNTY, COLORADO

Dig Safely.
CALL UNCC
THREE WORKING DAYS BEFORE YOU DIG
811
www.uncc.org
UTILITY NOTIFICATION CENTER OF COLORADO

COLORADO REGISTERED PROFESSIONAL ENGINEER
DARWIN F. BOX
FOR REVIEW ONLY
08/06/19
33802
ONLY VALID FOR CONSTRUCTION IF SEALED, SIGNED AND DATED ON EACH SHEET

INITIAL PLAN RELEASE: 08/06/19
DESIGNED BY: CFC
DRAWN BY: CFC
CHECKED BY: CFC
PROJECT NO. 01-0187.003.00
DOC CON # C2.12-FHP&P
SHT C2.12

T:\0187_003_00-KEENE LAND-MARKET BUS PARK\Dwg\CDs\0187_003-WECI-CDS-2.00.dwg, C2.12-FH P&P, 8/16/2019 3:37:20 PM, _DWG To PDF.pc3, WEC 24*36, WEC 24*36

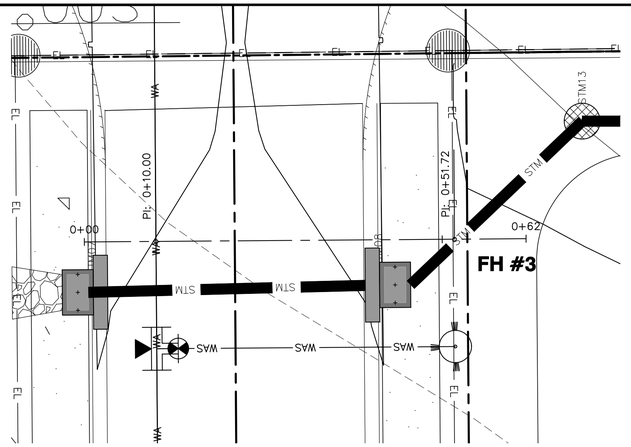

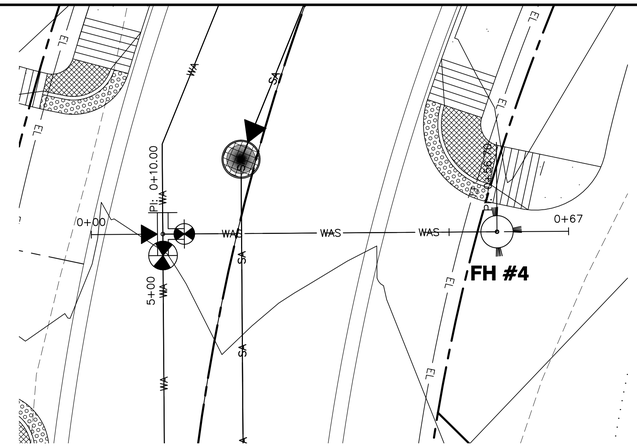

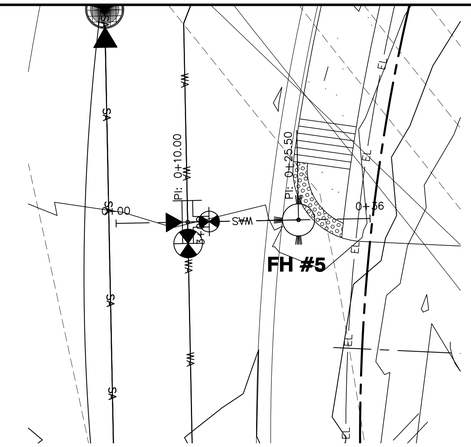

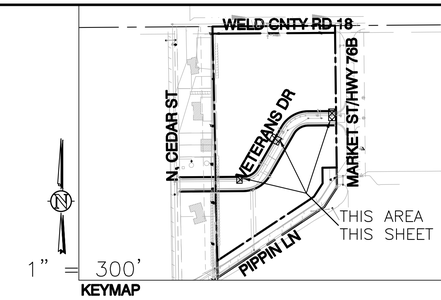

10 5 0 10 20

FULL HORIZONTAL SCALE: 1" = 10'
HALF HORIZONTAL SCALE: 1" = 20'
FULL VERTICAL SCALE: 1" = 1'
HALF VERTICAL SCALE: 1" = 2'

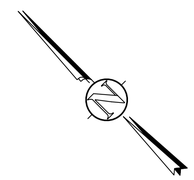

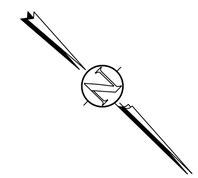

JOINT DEFLECTION SHALL NOT EXCEED 1°

CONTRACTOR TO DEFLECT VERTICAL ALIGNMENT AS NOTED AND SHOWN IN PROFILE VIEW. DEFLECTIONS CAN BE AT JOINTS OR FITTINGS. RESTRAIN EACH JOINT WHERE DEFLECTION OCCURS.

ALL FIRELINE JOINTS AND FITTINGS TO BE RESTRAINED WITH MEGALUGS OR APPROVED EQUAL IN ADDITION TO THRUST BLOCK INSTALLATION.

ALL WATER LINE VALVES, BENDS, AND FITTINGS SHALL BE RESTRAINED AND THRUST BLOCKS INSTALLED. SEE ALSO JOINT RESTRAINT TABLE THIS SHEET.

IF LESS THAN 18" CLEARANCE BETWEEN UTILITY CROSSINGS INSTALL PIPE SUPPORT CROSSING BETWEEN UTILITY CROSSING. MIN. ENCASEMENT OF O.D. + 18" EACH DIRECTION - 3'x3'x20' MIN. FLOWFILL (150 PSI) OF BOTH LINES (10' EACH SIDE OF UTILITY CROSSING)

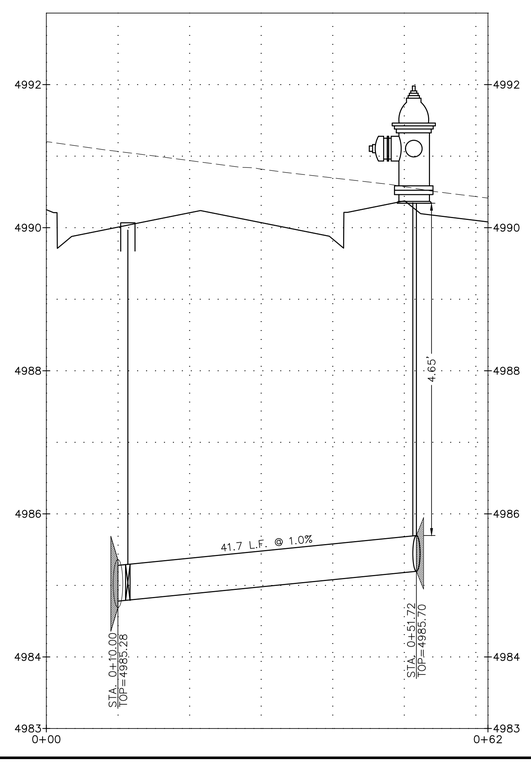

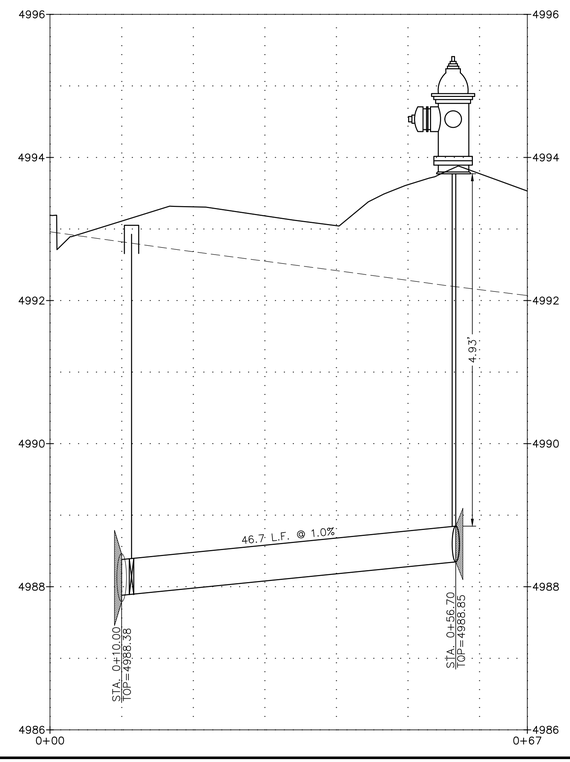

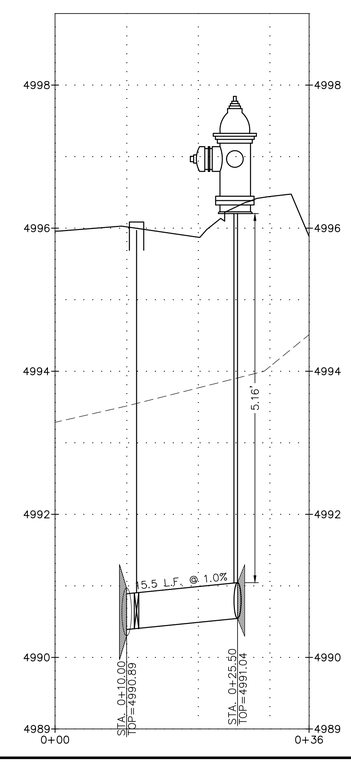

SYMBOL LEGEND

- 45 DEG BEND
- 22.5 DEG BEND
- RESTRAINED PLUG
- RESTRAINED TEE
- WATER METER
- RESTRAINED CROSS
- FIRE HYDRANT
- RESTRAINED WATER VALVE
- PIPE CROSSOVER
- MANHOLE
- PROPOSED ASPHALT PAVING

LINETYPE LEGEND

	LOT / PROPERTY LINE
	RIGHT OF WAY LINE
	SETBACK
	EASEMENT
	TO BE ABANDONED LOT LINE
	EXISTING BUILDING, CURB
	EDGE of ASPHALT
	CHAINLINK FENCE
	WIRE FENCE
	POND WQ W/S
	SWALE
OHE	EXISTING SWALE
OHE	EXISTING OVERHEAD ELEC
E	EXISTING ELECTICAL LINE
S	EXISTING STORM LINE
W	EXISTING SANITARY LINE
G	EXISTING WATER LINE
	EXISTING GAS LINE
FIBER	EXISTING FIBER OPTIC LINE
T	EXISTING TELEPHONE LINE
SA	PROPOSED SANITARY LINE
SS	PROPOSED SANITARY SERVICE
STM	PROPOSED STORM LINE
WA	PROPOSED WATER LINE
WAS	PROPOSED WATER SERVICE
GA	PROPOSED GAS LINE
EL	PROPOSED ELECTRIC LINE
PH	PROPOSED TELEPHONE LINE

127 S. DENVER AVE
FT. LUPTON, CO 80621
www.westernec.com
email@westernec.com
(720) 685-9951
FAX (720) 294-1330
Western Engineering Consultants, inc LLC

No.	REVISION	DATE	BY
0	PRELIM/FINAL PLAT SUBMITTAL	08/06/19	CFC

KEENE LAND LLC
CONTACT: RICK ROBERTSON
853 WEST 5
KEENESBURG, CO 80643
(303)961-0031

FIRE HYDRANT PLAN & PROFILE
MARKET STREET BUSINESS PARK SUBDIVISION
TOWN of KEENESBURG, WELD COUNTY, COLORADO

Dig Safely.
CALL UNCC
THREE WORKING DAYS BEFORE YOU DIG
811
www.uncc.org
UTILITY NOTIFICATION CENTER OF COLORADO

COLORADO REGISTERED PROFESSIONAL ENGINEER
CHAWN F. CFC
FOR
33802
REVIEW ONLY
08/06/19
ONLY VALID FOR CONSTRUCTION IF SEALED, SIGNED AND DATED BELOW SIGNATURE

INITIAL PLAN RELEASE: 08/06/19
DESIGNED BY: CFC
DRAWN BY: CFC
CHECKED BY: CFC
PROJECT NO. 01-0187.003.00
DOC CON # C2.13-FHP&P
SHT C2.13

T:\0187_003_00-KEENE LAND-MARKET BUS PARK\Dwg\CDs\0187_003-WECI-CDS-2.00.dwg, C2.13-FH P&P, 8/16/2019 3:37:34 PM, _DWG To PDF.pc3, WEC 24*36, WEC 24*36

MH DEPTH	A
5' TO 15'	8"
OVER 15'	10"

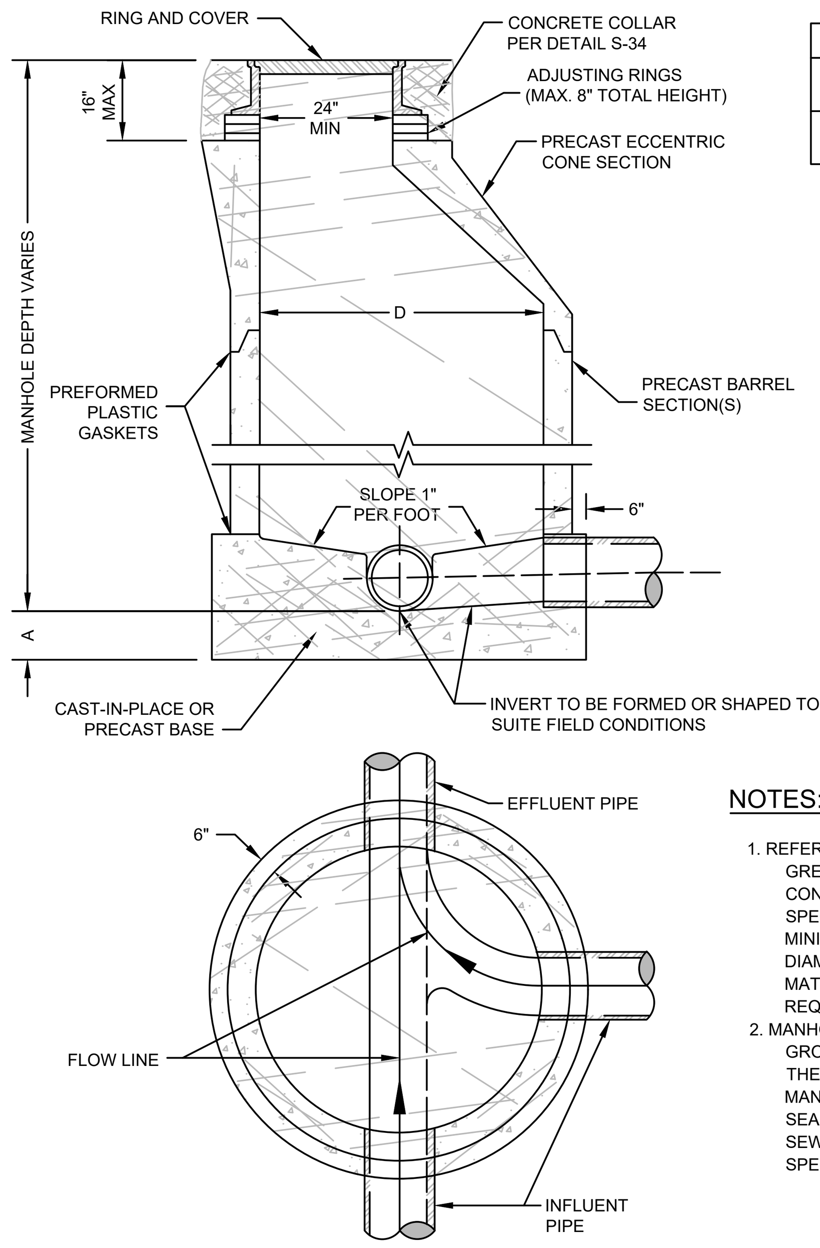

NOTES:

1. REFERENCE CITY OF GREELEY WATER & SEWER CONSTRUCTION SPECIFICATIONS FOR MINIMUM MANHOLE DIAMETER (D) AND MATERIAL/INSTALLATION REQUIREMENTS.
2. MANHOLES INSTALLED IN GROUNDWATER ABOVE THE BASE SHALL HAVE ALL MANHOLE SECTION JOINTS SEALED PER WATER & SEWER CONSTRUCTION SPECIFICATIONS.

N.T.S.
WW-1

PROJECT: ----	TASK:	DATE: 6/8/2015

PREPARED BY: TELESTO

STANDARD SANITARY SEWER MANHOLE

PREPARED FOR:

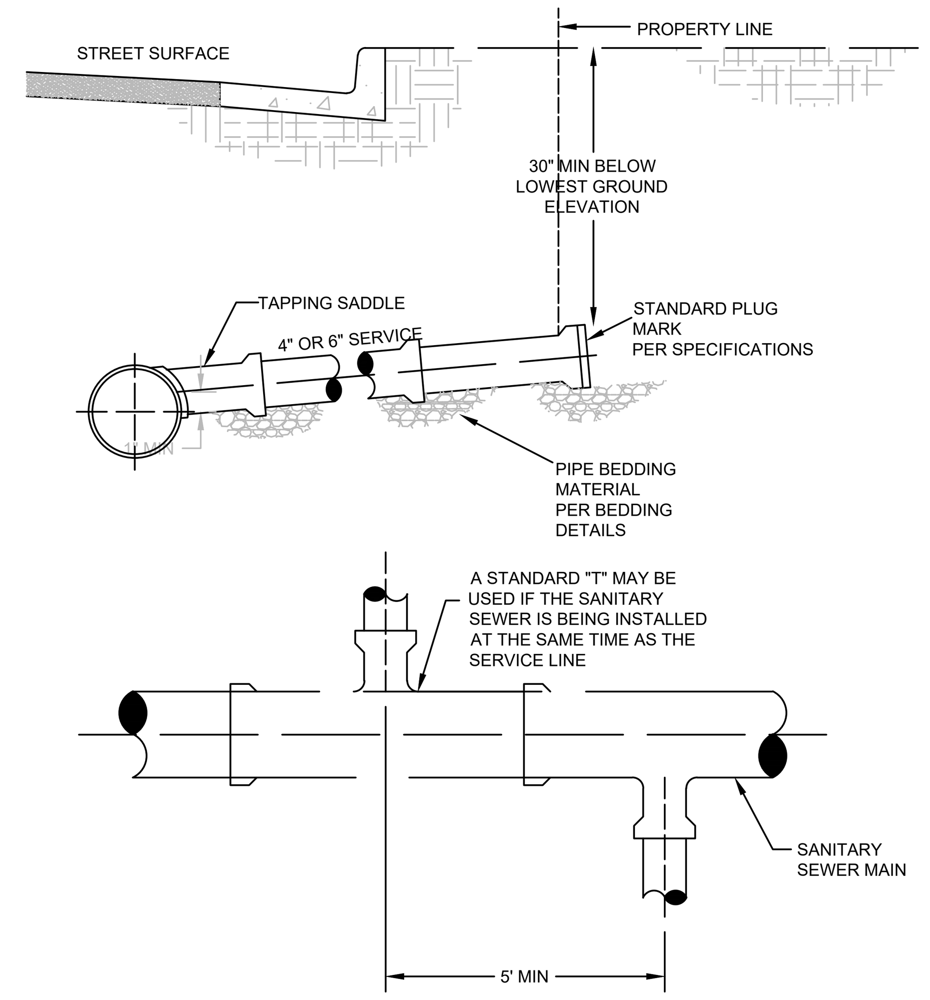

NOTES:

1. IN NO CASE SHALL THE SERVICE LINE PROTRUDE INTO THE MAIN.
2. SERVICES ARE 4" OR 6" IN DIAMETER AND SHALL HAVE A MINIMUM SLOPE OF 1.0% (1/8" PER FOOT) AND A MAXIMUM SLOPE OF 8.0%.
3. SERVICES LARGER THAN 6" DIAMETER SHALL BE CONNECTED TO A MANHOLE.
4. SERVICES SHALL EXTEND TO THE PROPERTY LINE UNLESS OTHERWISE SHOWN ON CITY ACCEPTED CONSTRUCTION DRAWINGS.
5. THE SPRINGLINE OF THE SERVICE LINE SHALL BE A MINIMUM OF 1" ABOVE THE SPRINGLINE OF THE SANITARY SEWER MAIN AND NO CLOSER THAN 1' TO A PIPE JOINT.

N.T.S.
WW-2

PROJECT: ----	TASK: %%	DATE: 6/8/2015

PREPARED BY: TELESTO

SANITARY SEWER SERVICE CONNECTION

PREPARED FOR:

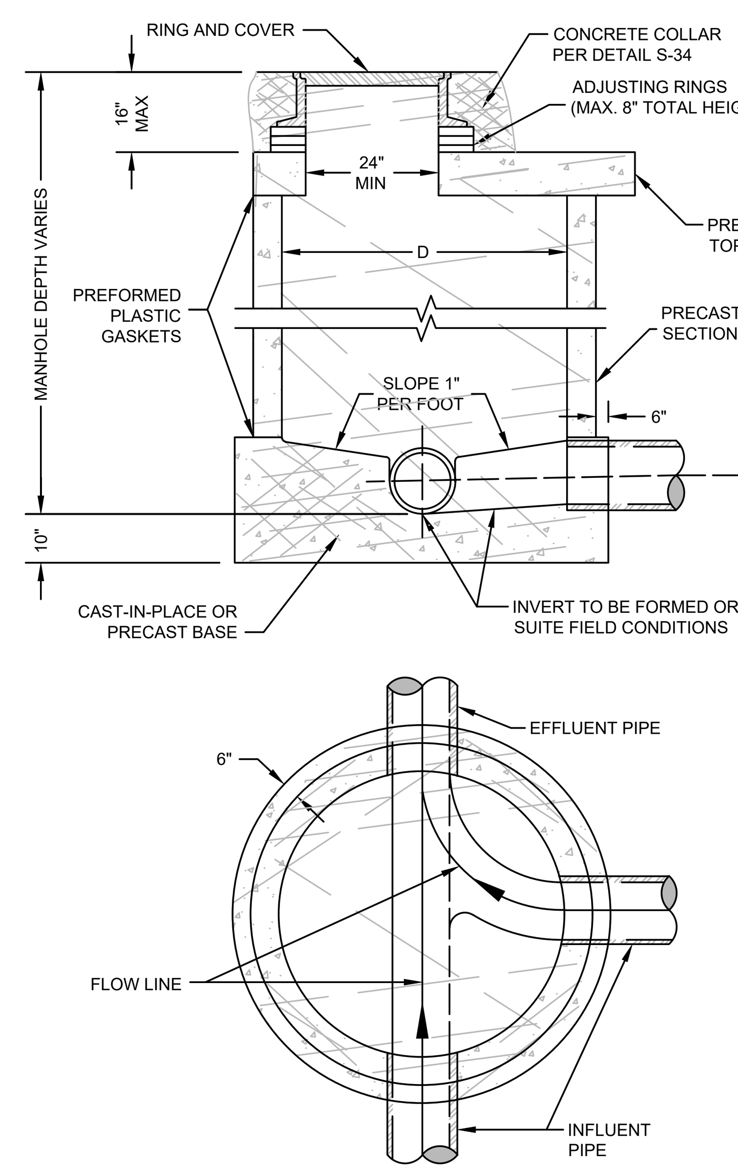

NOTES:

1. REFERENCE CITY OF GREELEY WATER & SEWER CONSTRUCTION SPECIFICATIONS FOR MINIMUM MANHOLE DIAMETER (D) AND MATERIAL/INSTALLATION REQUIREMENTS.
2. MANHOLES INSTALLED IN GROUNDWATER ABOVE THE BASE SHALL HAVE ALL MANHOLE SECTION JOINTS SEALED PER WATER & SEWER CONSTRUCTION SPECIFICATIONS.

N.T.S.
WW-3

PROJECT: ----	TASK: %%	DATE: 6/8/2015

PREPARED BY: TELESTO

SHALLOW SANITARY SEWER MANHOLE

PREPARED FOR:

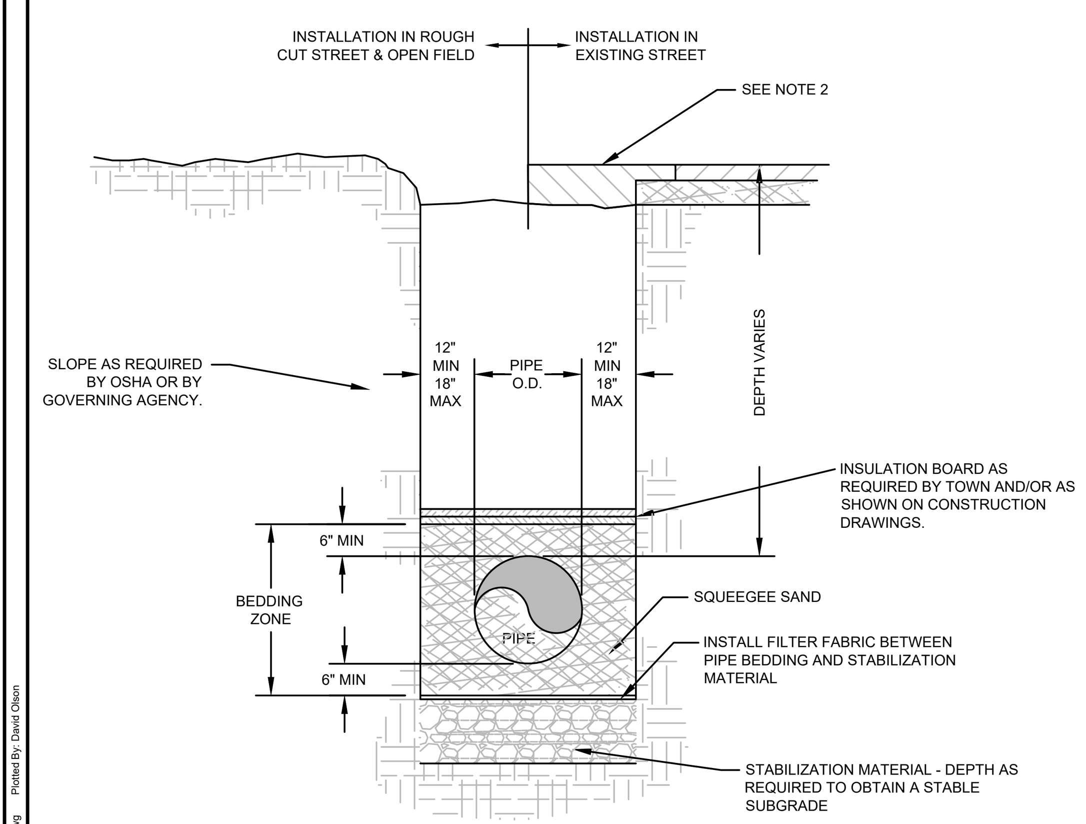

NOTES:

1. REFER TO CONSTRUCTION SPECIFICATIONS FOR STABILIZATION, FILTER FABRIC, BEDDING, BACKFILL MATERIAL, AND COMPACTION REQUIREMENTS.
2. REFER TO SPECIFICATIONS, CURRENT VERSION, FOR STREET CUT REQUIREMENTS.
3. AN OVER EXCAVATED TRENCH SHALL BE BACKFILLED AND COMPACTED (AS PER SPECIFICATIONS) UNDER THE DIRECTION OF THE TOWN.
4. PIPELINE SHALL BE LAID IN A PROPOSED FILL AREA PRIOR TO AREA BEING COMPLETELY FILLED TO PROPOSED FINAL GRADES AND COMPACTED PER TOWN SPECIFICATIONS.
5. COMPACTION TESTING METHODS AND FREQUENCY SHALL BE IN ACCORDANCE WITH PUBLIC WORKS CONSTRUCTION SPECIFICATIONS.
6. TRENCHES SHALL BE SHORED, BRACED, OR SHEETED AS NECESSARY FOR THE SAFETY AND PROTECTION OF PERSONNEL AND OTHER UTILITIES.
7. INSULATION BOARD SHALL BE 2" THICK MINIMUM, CONSISTING OF TWO BOARDS (1" MINIMUM PER BOARD) WITH OFFSET JOINTS PLACED ACROSS FULL TRENCH WIDTH.

N.T.S.
WA-1

PROJECT: 800100	TASK: 001	DATE: 12-17-2015

PREPARED BY: TELESTO

TRENCH CROSS SECTION

PREPARED FOR:

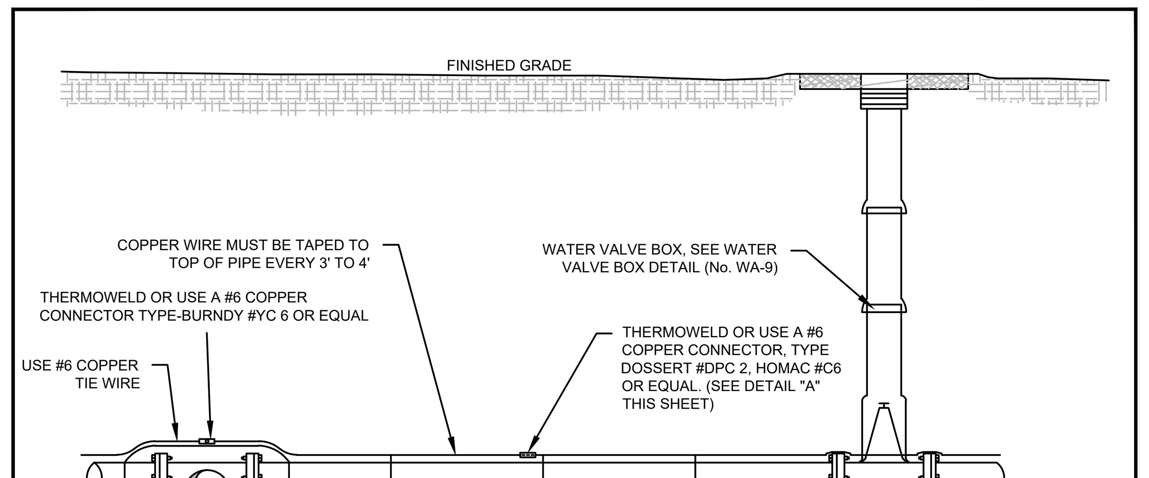

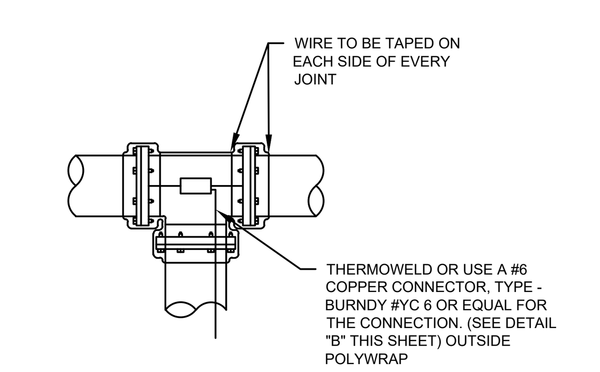

NOTES:

1. STRIP WIRE CASING TO EXPOSE WIRE FOR PROPER CONDUCTION.
2. 12 GAUGE SOLID OR STRANDED WITH 3M DBY CONNECTORS.
3. DAYLIGHT TRACER WIRE IN TEST BOXES BEHIND NEAREST FIRE HYDRANT (SEE DETAIL WA-3).

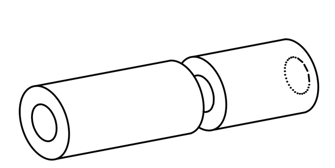

DETAIL "A"

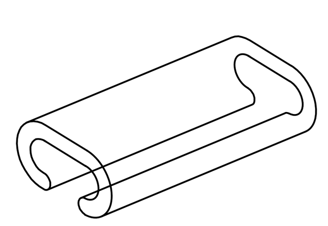

DETAIL "B"

N.T.S.
WA-2

PROJECT: 800100	TASK: 001	DATE: 12-17-2015

PREPARED BY: TELESTO

COPPER TRACER WIRE DETAIL ON PVC PIPE

PREPARED FOR:

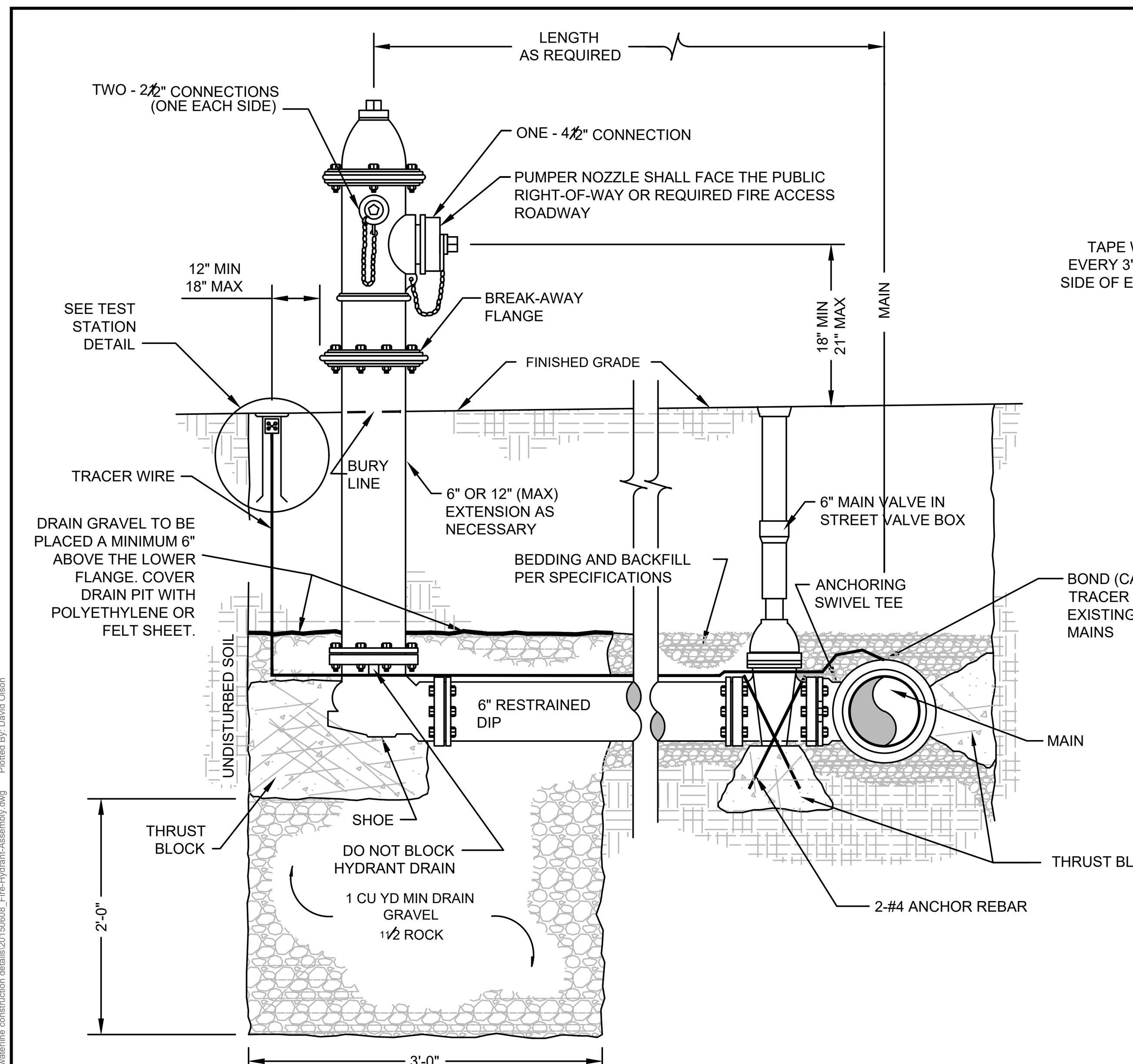

ELEVATION VIEW

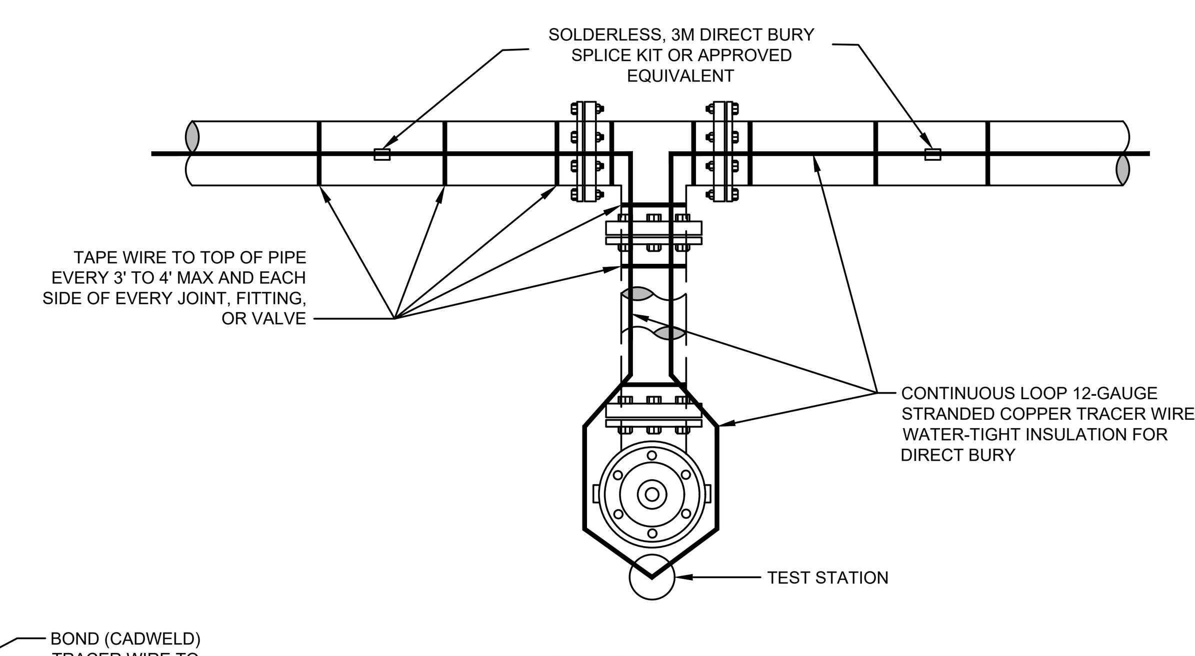

TRACER WIRE INSTALLATION PLAN VIEW

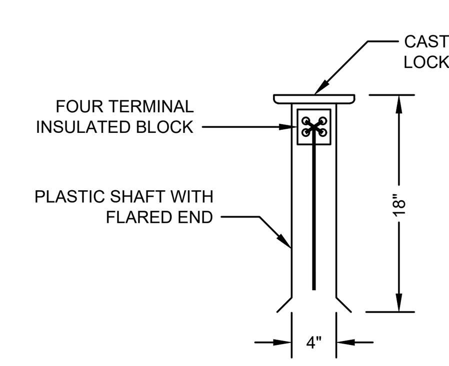

TEST STATION DETAIL

N.T.S.
WA-3

NOTES

1. MINIMUM DEPTH OF BURY 5'-0" FROM FINISHED GRADE TO TOP OF PIPE.
2. PROVIDE POLYETHYLENE BOND BREAKER BETWEEN ALL PIPE/FITTINGS AND POURED CONCRETE.
3. HYDRANT TO BE WATEROUS PACER 250 WITH NATIONAL STANDARD THREADS.

FIRE HYDRANT ASSEMBLY WITH TRACER WIRE INSTALLATION

PROJECT: 800100	TASK: 001	DATE: 12-17-2015

PREPARED BY: TELESTO

PREPARED FOR:

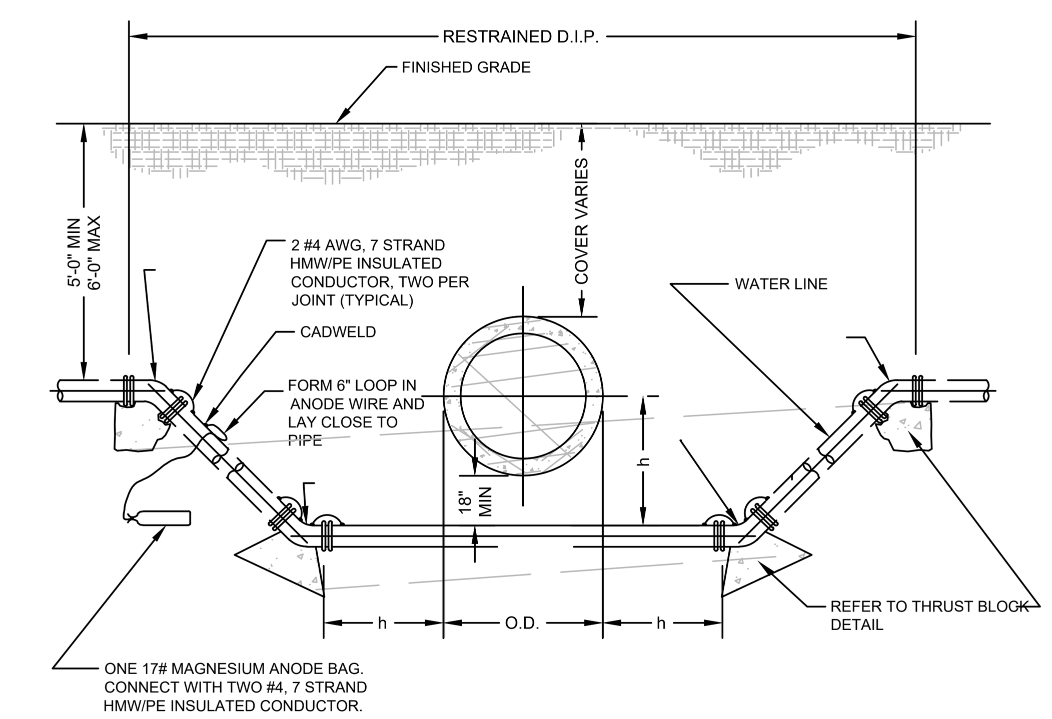

NOTES:

1. PIPE MAY BE RESTRAINED BY MECHANICAL JOINT PIPE RESTRAINTS OR RESTRAINED JOINT PIPE.
2. CONDUCTOR WIRE SHALL BE CAD WELDED TO PIPE, BOTH ENDS, OR BONDING STRAP BOLTED TO PIPE. WIRE SHALL HAVE A MINIMUM OF 2" SLACK.
3. ANODE SHALL BE COVERED WITH FINE SOIL CONTAINING NO ROCKS OR DIRT CLUMPS. SOIL SHALL BE COMPACTED AROUND ANODE.
4. CONSTRUCT CADWELD CONNECTIONS PER WATER AND SEWER STANDARD DRAWINGS AND CONSTRUCTION SPECIFICATIONS.

N.T.S.
WA-4

PROJECT: 800100	TASK: 001	DATE: 12-17-2015

PREPARED BY: TELESTO

WATER LINE LOWERING

PREPARED FOR:

127 S. DENVER AVE
FT. LUPTON, CO 80621
www.westernec.com
email@westernec.com
(720) 685-9951
FAX (720) 294-1330
Western Engineering Consultants, inc LLC

No.	REVISION	DATE	BY
0	PRELIM/FINAL PLAT SUBMITTAL	08/06/19	CFC

KEENE LAND, LLC
CONTACT: RICK ROBERTSON
8537 WCR 51
KEENESBURG, CO 80643
(303)961-0031

TOWN OF KEENESBURG DETAILS
MARKET STREET BUSINESS PARK SUBDIVISION
TOWN of KEENESBURG, WELD COUNTY, COLORADO

Dig Safely. CALL UNCC
THREE WORKING DAYS BEFORE YOU DIG
811
www.uncc.org
UTILITY NOTIFICATION CENTER OF COLORADO

COLORADO REGISTERED PROFESSIONAL ENGINEER
FOR 33802 REVIEW ONLY 08/06/19
ONLY VALID FOR CONSTRUCTION IF SEAL & ORIGINAL SIGNATURE ARE ON EACH SHEET

INITIAL PLAN RELEASE: 08/06/19
DESIGNED BY: CFC
DRAWN BY: CFC
CHECKED BY: CFC
PROJECT NO. 01-0187.003.00
DOC CON # C2.14-DETAILS
SHT C2.14

T:\0187_003_00-KEENE LAND-MARKET BUS PARK\Dwg\CD\s\0187_003-WECI-CDS-2.00.dwg, C2.14-KNSBGDTLS, 8/16/2019 3:37:44 PM, _DWG To PDF.pc3, WEC 24*36, WEC 24*36

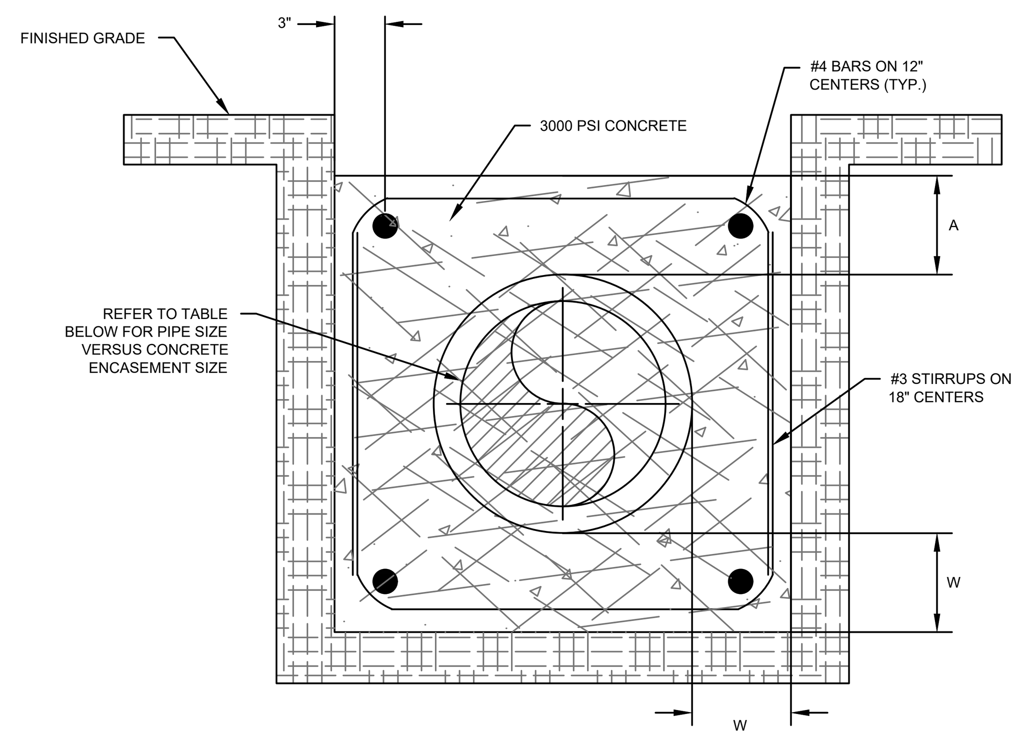

PIPE SIZE	W	A
6"	4"	4"
8"	4"	4"
10"	4"	4"
12"	4"	4"
15"	4"	4"
16"	4"	4"
18"	5"	5"
21"	5"	5"
24" +	6"	6"

NOTE:
REBAR & STIRRUPS SHALL BE EPOXY COATED IF THE ENCASEMENT IS UNDER A STREAM OR DRAINAGEWAY AND IF THE ENCASEMENT IS IN HIGH GROUND WATER

N.T.S.
WA-6

PROJECT: 800100 TASK: 001 DATE: 12-17-2015
PREPARED BY: TELESTO SOLUTIONS INCORPORATED

CONCRETE ENCASEMENT

PREPARED FOR:

STEP 1
CUT A SECTION OF POLYETHYLENE (PE) TUBE APPROXIMATELY 2' LONGER THAN THE PIPE SECTION. REMOVE ALL DEBRIS FROM THE PIPE SURFACE. SLIP THE TUBE AROUND THE END OF THE PIPE, STARTING AT THE SPIGOT END. BUNCH THE TUBE ACCORDION-FASHION ON THE END OF THE PIPE. PULL BACK THE OVERHANGING END OF THE TUBE UNTIL IT CLEARS THE PIPE SPIGOT END.

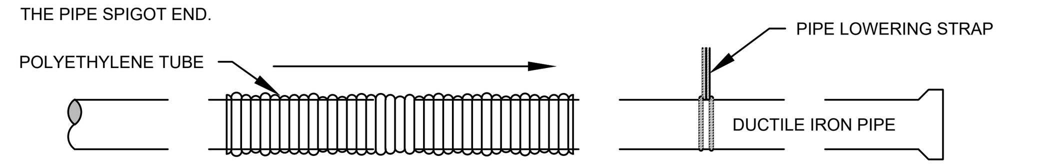

STEP 2
LOWER THE PIPE INTO THE TRENCH AND MAKE UP THE PIPE JOINT WITH THE PRECEDING SECTION OF PIPE. SPREAD THE TUBE OVER THE ENTIRE PIPE BARREL AND REMOVE THE PIPE LOWERING STRAP. MAKE SURE NO DIRT OR BEDDING MATERIAL BECOMES TRAPPED BETWEEN TUBE AND PIPE.

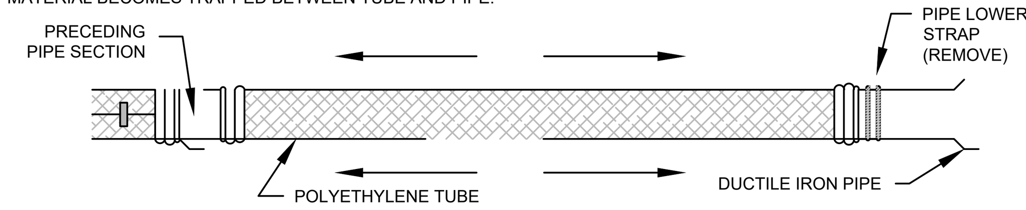

STEP 3
OVERLAP THE JOINT WITH THE TUBE FROM THE PRECEDING LENGTH OF PIPE AND SECURE IT INTO PLACE WITH THREE CIRCUMFERENTIAL TURNS OF 2" ADHESIVE TAPE.

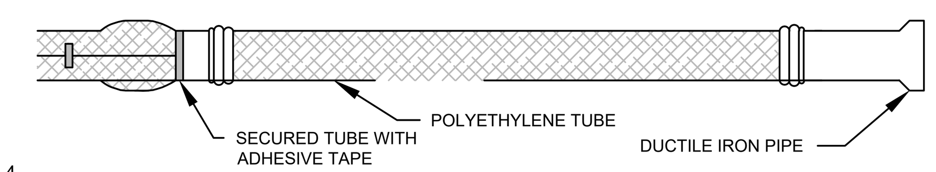

STEP 4
OVERLAP THE SECURED TUBE END WITH THE TUBE END OF THE NEW PIPE SECTION AND SECURE THE NEW TUBE END IN PLACE WITH THE TAPING PROCEDURE IN STEP 3. TAKE UP THE SLACK IN THE TUBE ALONG THE BARREL OF THE PIPE TO MAKE A SNUG, BUT NOT TIGHT, FIT BY FOLDING THE EXCESS TUBE BACK OVER THE TOP OF THE PIPE. SECURE THE TUBE AT 3' TO 5' INTERVALS ALONG THE PIPE BARREL WITH ADHESIVE TAPE.

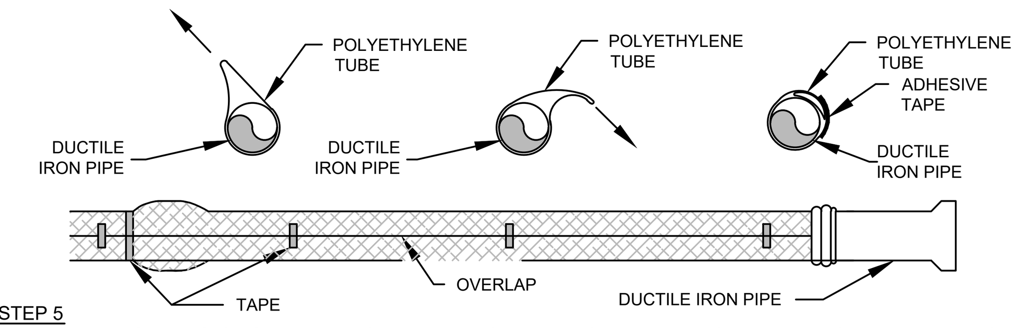

STEP 5
REPAIR ANY RIPS, TEARS, OR OTHER DAMAGE WITH ADHESIVE TAPE. CAREFULLY BACKFILL PIPE. TO PREVENT DAMAGE TO THE TUBE DURING BACKFILL, ALLOW ADEQUATE SLACK IN THE TUBE AT THE JOINT. AVOID DAMAGING THE TUBE WHEN USING TAMPING DEVICES.

N.T.S.
WA-8

PROJECT: 800100 TASK: 001 DATE: 12-17-2015
PREPARED BY: TELESTO SOLUTIONS INCORPORATED

POLYETHYLENE WRAP

PREPARED FOR:

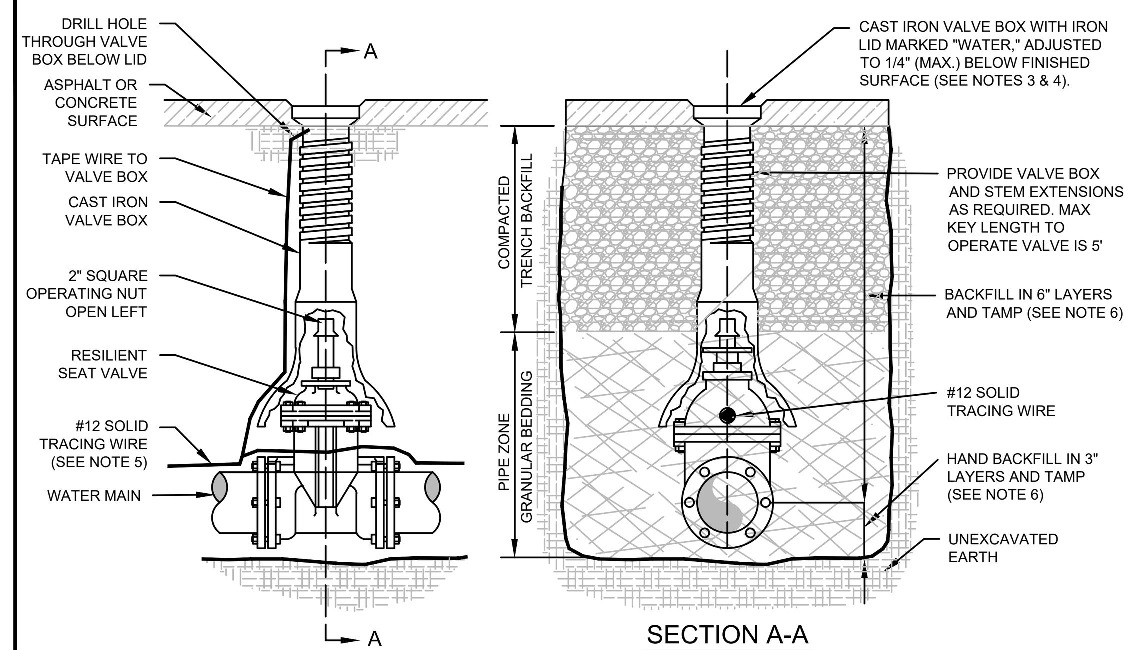

SECTION A-A
(GATE VALVE SHOWN, SIMILAR FOR BUTTERFLY VALVE)

NOTES:

1. ALL VALVES SHALL BE ENCASED IN A MINIMUM 8 MIL. POLYETHYLENE WRAP. A 2" WIDE, TEN MIL. THICK POLYETHYLENE PRESSURE-SENSITIVE TAPE SHALL BE USED TO CLOSE SEAMS, SECURE TO PIPE OR HOLD OVERLAPS.
2. ALL VALVES BOXES SHALL BE OF CAST IRON CONSTRUCTION, TWO PIECE THREADED ADJUSTABLE DESIGN PER DEPARTMENT STANDARDS. ALL-THREAD RODS AND NUTS SHALL BE 316 STAINLESS STEEL.
3. WITHIN OPEN ARES OR AREAS TO BE DEVELOPED IN THE FUTURE, VALVE BOX LID MAY BE DEPRESSDE OR HAVE A CONCRETE PAD. MARK VALVE LOCATION WITH FLEXIBLE MARKER POST.
4. FOR FIRE SERVICE LINES ONLY: LIDS SHALL BE LOCKING TYPE.
5. TRACER WIRE TO BE TYPICALLY DAYLIGHTED AT FIRE HYDRANT. IF HYDRANT IS NOT AVAILABLE, PROVIDE AT MAINLINE VALVE AS SHOWN ABOVE AND COIL A MINIMUM OF 3' OF TRACER WIRE IN VALVE BOX.
6. SEE SPECIFICATIONS FOR COMPACTION AND TESTING REQUIREMENTS.
7. VALVES TYPICALLY REQUIRED AS SHOWN, UNLESS OTHERWISE APPROVED BY THE DEPARTMENT, SINCE OPERATIONAL CONSIDERATIONS MAY RESULT IN FEWER VALVES BEING REQUIRED TO BE INSTALLED.
8. RESTRAINT FOR VALVES TO A FITTING CAN BE MADE DIRECTLY WITH FOSTER ADAPTORS OR BY MECHANICAL JOINT RESTRAINT. EXAMPLE FOSTER ADAPTOR CONNECTIONS ARE DETAILED BELOW.

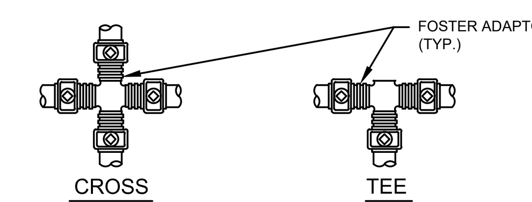

N.T.S.
WA-9

PROJECT: 800100 TASK: 001 DATE: 12-17-2015
PREPARED BY: TELESTO SOLUTIONS INCORPORATED

VALVE BOX

PREPARED FOR:

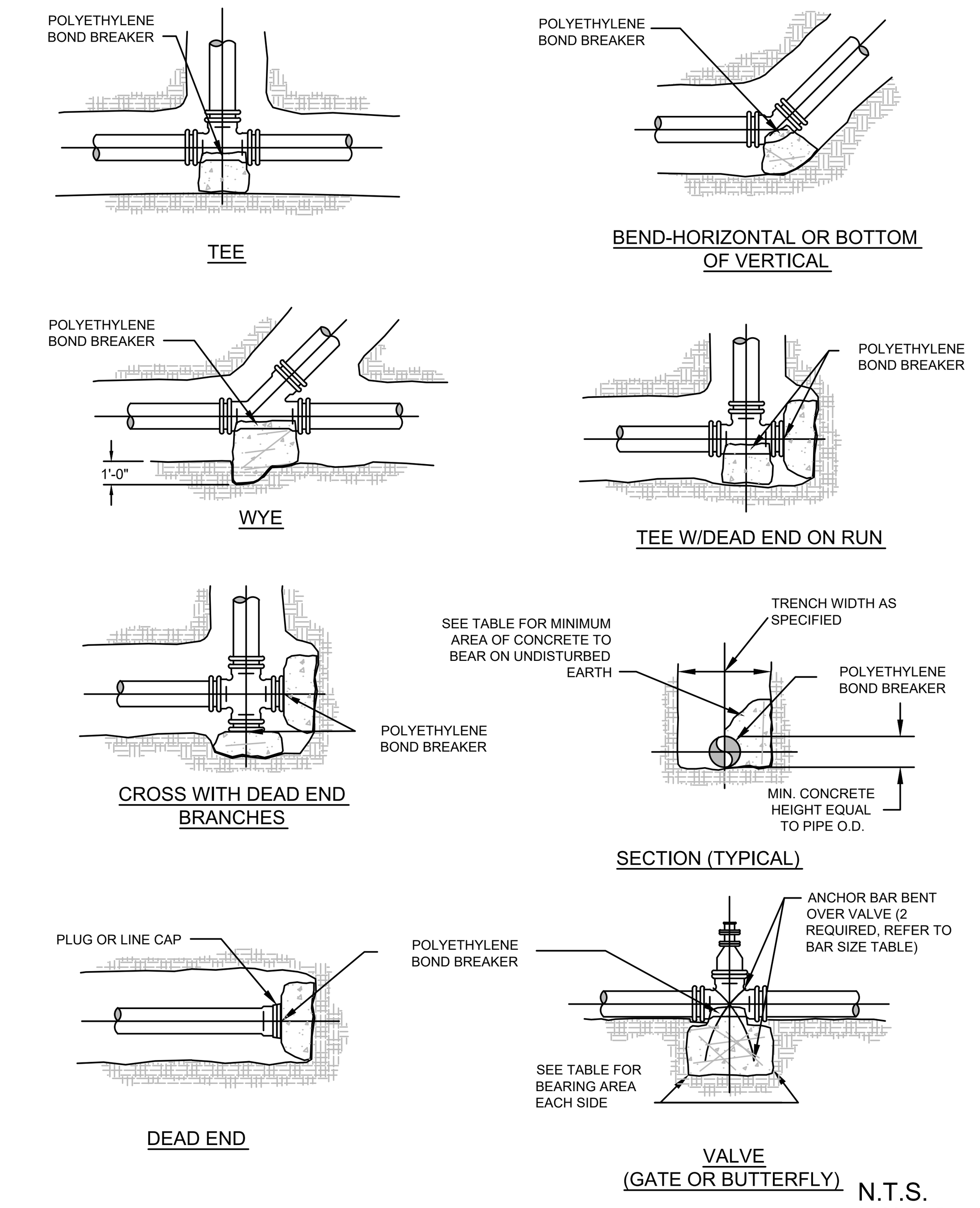

N.T.S.
WA-10

PROJECT: 800100 TASK: 001 DATE: 12-17-2015
PREPARED BY: TELESTO SOLUTIONS INCORPORATED

THRUST BLOCKS
SHEET 1 OF 3

PREPARED FOR:

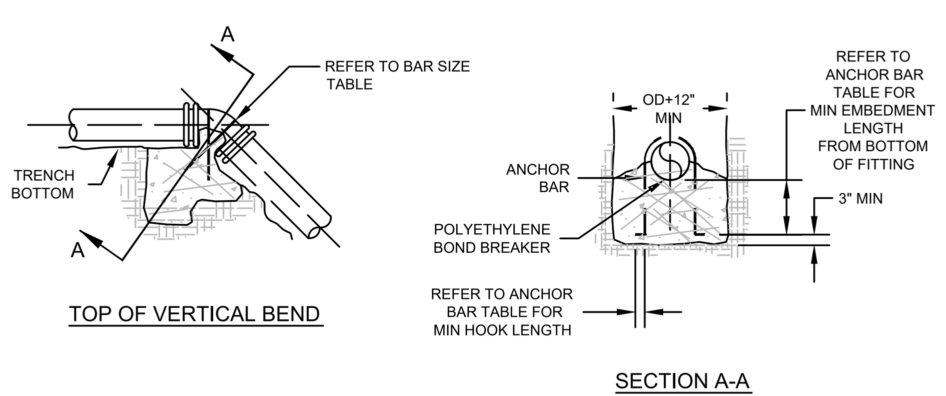

VOL. CONCRETE FOR 100 PSI TEST PRESSURE (CU FT)

PIPE SIZE	BENDS		
		22 1/2	11 1/4
6"	18.6	9.5	4.7
8"	32.0	16.3	8.2
12"	68.1	34.7	17.5
16"	118.3	60.3	30.3

FOR TEST PRESSURE GREATER THAN 100 PSI, ADJUST CONCRETE VOLUMES BY MULTIPLYING TABLE VALUES BY CORRECTION FACTOR "F"

$$F = \frac{\text{TEST PRESSURE}}{100}$$

ANCHOR BAR INFORMATION FOR 100 PSI TEST PRESSURE

CONCRETE VOLUME	REBAR SIZE	MIN EMBEDMENT LENGTH	MIN HOOK LENGTH
60 CF	NO. 4	8"	8"
90 CF	NO. 5	12"	10"
133 CF	NO. 6	16"	12"

N.T.S.
WA-10

PROJECT: 800100 TASK: 001 DATE: 12-17-2015
PREPARED BY: TELESTO SOLUTIONS INCORPORATED

THRUST BLOCKS
SHEET 2 OF 3

PREPARED FOR:

THRUST BLOCK BEARING AREAS (SQ-FT) FOR INTERNAL STATIC PRESSURE OF 100 PSI AND SOIL BEARING CAPACITY OF 1000 PSF

DIAM (IN)			22 1/2	11 1/4	DEAD ENDS, VALVES & TEES, PLUGGED CROSS BRANCHES
3	1.7	0.9	0.5	0.2	1.2
4	2.6	1.4	0.7	0.4	1.8
6	5.3	2.9	1.5	0.7	3.7
8	9.1	4.9	2.5	1.3	6.4
12	19.4	10.5	5.3	2.7	13.7
16	33.6	18.2	9.3	4.7	23.8

NOTES:

1. POLYETHYLENE BOND BREAKER SHALL BE INSTALLED BETWEEN ALL FITTINGS AND CONCRETE.
2. ALL THRUST BLOCKING SHALL BE CAST-IN-PLACE CONCRETE WITH A MINIMUM YIELD 28 DAY STRENGTH OF 2000 P.S.I.
3. THRUST BLOCKING SHALL BE CAST AGAINST UNDISTURBED SOIL. FORMS SHALL BE USED AS REQUIRED TO OBTAIN ADEQUATE BEARING AREA AND TO CONFINE THE CONCRETE. THRUST BLOCKING SHALL BEAR ON THE FITTING OR END CAP ONLY AND WILL NOT BE ALLOWED TO SPILL OVER THE JOINT OR AGAINST THE PIPE.
4. THE CITY MAY REQUIRE LARGER THRUST BLOCKS THAN SPECIFIED IF SOILS ARE DETERMINED TO PROVIDE LESS THAN 1000 PSF BEARING CAPACITY.
5. IN THE ABSENCE OF SOIL BEARING CAPACITY INFORMATION USE 1000 PSF.
6. BEARING AREAS FOR ANY PRESSURE AND SOIL BEARING CAPACITY MAY BE OBTAINED BY MULTIPLYING THE TABULATED BEARING AREAS BY A CORRECTION FACTOR "F":

$$F = \frac{\text{(ACTUAL SPECIFIED TEST PRESSURE IN PSI)/(100 PSI)}}{\text{(ACTUAL SOIL BEARING CAPACITY IN PSF)/(1000 PSF)}}$$

7.
BEARING CAPACITY OF 3000 PSF.

FROM TABLE BEARING AREA = 9.1 SF

$$F = \frac{\text{(150 PSI)/(100 PSI)}}{\text{(3000 PSF)/(1000 PSF)}} = 0.5$$

REQUIRED BEARING AREA ON UNDISTURBED SOIL = (0.5)(9.1 SF) =4.55 SF

N.T.S.
WA-10

PROJECT: 800100 TASK: 001 DATE: 12-17-2015
PREPARED BY: TELESTO SOLUTIONS INCORPORATED

THRUST BLOCKS
SHEET 3 OF 3

PREPARED FOR:

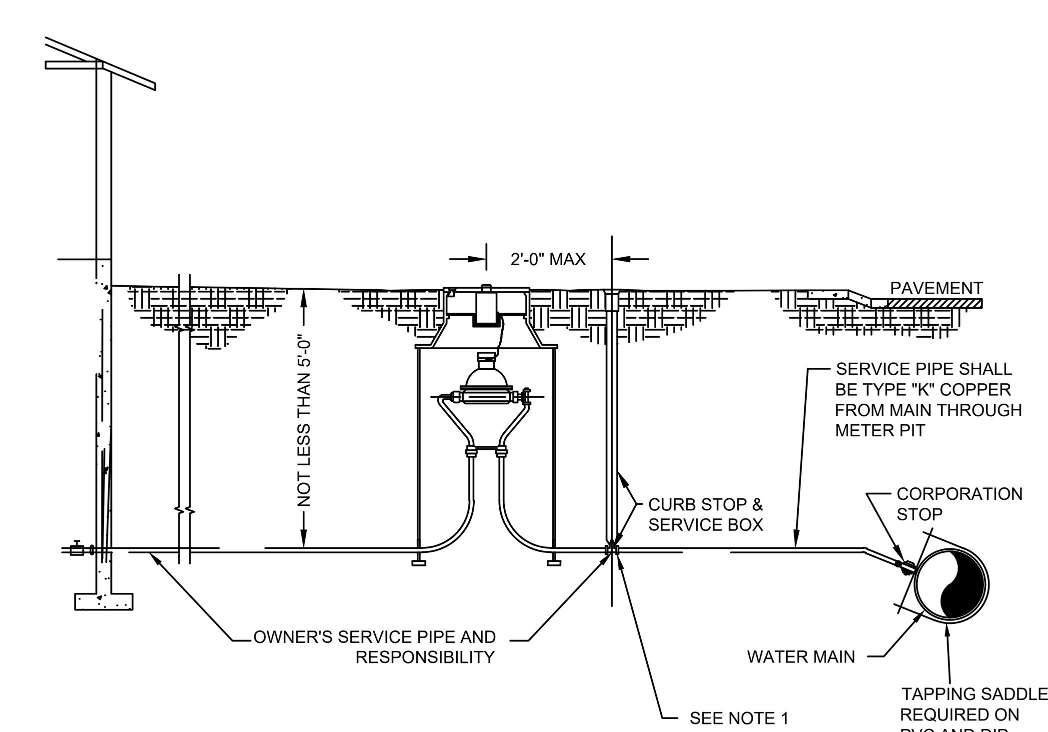

NOTES:

1. PLACEMENT OF CURB STOP BOX MAY VARY FROM A MAXIMUM OF 1 FOOT OUTSIDE THE PROPERTY LINE TO A MAXIMUM OF 1 FOOT INSIDE THE PROPERTY LINE. PLACEMENT OF CURB STOP BOX OUTSIDE THE PROPERTY LINE IS PREFERRED.
2. PUBLIC WORKS DEPARTMENT'S RESPONSIBILITY SHALL BE THE WATER MAIN, CORPORATION STOP, SERVICE PIPING UP TO THE CURB STOP, AND THE TUBE NUT ON THE STREET SIDE OF THE CURB STOP. OWNERS RESPONSIBILITY SHALL BE UP TO AN INCLUDING THE CURB STOP AND BOX.
3. SHOULD ANY SITUATION ARISE OTHER THAN SHOWN CONCERNING THE DEPTH OR OBSTRUCTION OF SERVICE LINE OR THE PLACEMENT OF THE METER PIT OR STOP BOX, CALL TOWN'S PUBLIC WORKS DEPARTMENT.
4. REFER TO WATER AND SEWER STANDARD DRAWINGS AND CONSTRUCTION SPECIFICATIONS FOR METER INSTALLATION REQUIREMENTS.
5. SEE DETAIL WA-11 FOR METER SETTING

N.T.S.
WA-11

PROJECT: 800100 TASK: 001 DATE: 12-17-2015
PREPARED BY: TELESTO SOLUTIONS INCORPORATED

SERVICE LINE, STOP BOX AND METER

PREPARED FOR:

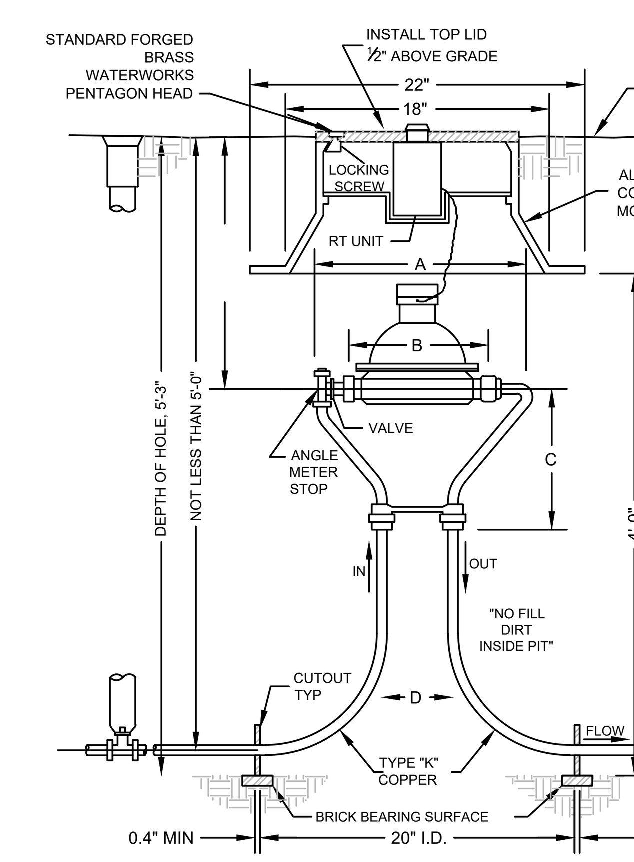

METER INSTALLATION DIMENSIONS

METER SIZE	A	B	C	D
3/4"	14 1/4"	9 5/16"	8 15/16"	5"
1"	17 1/4"	11 1/16"	11 1/4"	6"

NOTES:

1. NOT FOR INSTALLATION IN ROADWAYS OR PARKING AREAS.
2. IF SURFACE IS NOT TO FINAL GRADE AT TIME OF INSTALLATION OF METER, OR GRADE CHANGES AFTER INSTALLATION, OWNER MUST ADJUST PIT TO MEET SPECIFICATIONS.
3. METER SETTING MUST BE INSPECTED BEFORE BACKFILLING. FOR INSPECTION CALL TOWN DEPARTMENT OF PUBLIC WORKS, LOCATION OF METER SHALL BE 2 FEET DOWNSTREAM OF THE CURB STOP UNLESS OTHERWISE PLACED BY METER SERVICES.
4. NO CONCRETE FLOOR TO BE POURED IN METER PIT.
5. NO SPRINKLER SYSTEM CONNECTIONS SHALL BE MADE IN THE METER PIT. SPRINKLER PIT SHALL BE MINIMUM 5 FT DOWNSTREAM FROM METER PIT, MEASURED EDGE TO EDGE.
6. NO MAJOR LANDSCAPING OR STRUCTURES SHALL BE LOCATED WITHIN 4 FT OF THE METER PIT.
7. IF PRESSURE REDUCING VALVE IS REQUIRED BY PLUMBING CODE, IT SHALL BE INSTALLED INSIDE THE BUILDING, IMMEDIATELY FOLLOWING THE MAIN WATER SHUT OFF VALVE.
8. COPPER SHALL SHOW NO VISIBLE CRIMPING.
9. REFER TO WATER & SEWER CONSTRUCTION SPECIFICATIONS, CURRENT VERSION, FOR PRODUCT SPECIFICATIONS.

N.T.S.
WA-12

PROJECT: 800100 TASK: 001 DATE: 12-17-2015
PREPARED BY: TELESTO SOLUTIONS INCORPORATED

SETTING FOR 3/4" & 1" METER

PREPARED FOR:

127 S. DENVER AVE
FT. LUPTON, CO 80621
www.westerneci.com
email@westerneci.com
(720) 685-9951
FAX (720) 294-1330
Western Engineering Consultants, inc LLC

No.	REVISION	DATE	BY
0	PRELIM/FINAL PLAT SUBMITTAL	08/06/19	CFC

KEENE LAND, LLC
CONTACT: RICK ROBERTSON
8537 WCR 51
KEENESBURG, CO 80643
(303)961-0031

TOWN OF KEENESBURG DETAILS
MARKET STREET BUSINESS PARK SUBDIVISION
TOWN of KEENESBURG, WELD COUNTY, COLORADO

Dig Safely.
CALL UNCC
THREE WORKING DAYS BEFORE YOU DIG
811
www.uncc.org
UTILITY NOTIFICATION CENTER OF COLORADO

COLORADO REGISTERED PROFESSIONAL ENGINEER
FOR 33802
REVIEW ONLY
08/06/19
ONLY VALID FOR CONSTRUCTION IF SEAL & ORIGINAL SIGNATURE ARE ON EACH SHEET

INITIAL PLAN RELEASE: 08/06/19
DESIGNED BY: CFC
DRAWN BY: CFC
CHECKED BY: CFC
PROJECT NO. 01-0187.003.00
DOC CON # C2.15-DETAILS
SHT C2.15

T:\0187_003_00-KEENE LAND-MARKET BUS PARK\Dwg\CD\s\0187_003-WECI-CDS-2.00.dwg, C2.15-KNSBGDTLS, 8/16/2019 3:37:49 PM, _DWG To PDF.pc3, WEC 24'36, WEC 24'36

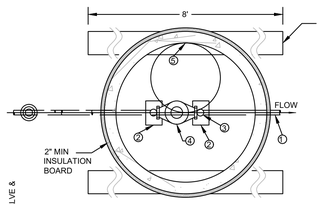

PLAN VIEW

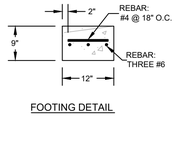

FOOTING DETAIL

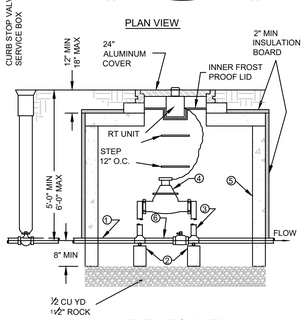

ELEVATION VIEW

NOTES:

1. MANHOLE BASE BEAMS ARE REQUIRED FOR ALL INSTALLATIONS.
2. IF SURFACE IS NOT TO FINAL GRADE AT TIME OF METER INSTALLATION OR GRADE CHANGES AFTER INSTALLATION, OWNER MUST ADJUST VAULT TO MEET SPECIFICATIONS.
3. METER SETTING MUST BE INSPECTED BEFORE BACKFILLING. FOR INSPECTION CALL PUBLIC WORKS DEPARTMENT.
4. ALUMINUM COVER SHALL NOT COME INTO DIRECT CONTACT WITH CONCRETE COLLAR.
5. NO CONCRETE FLOOR TO BE POURED IN METER VAULT.
6. NO SPRINKLER SYSTEM CONNECTIONS SHALL BE MADE IN THE METER VAULT. SPRINKLER PIT SHALL BE 5 FT MINIMUM DOWNSTREAM FROM THE METER, MEASURED EDGE TO EDGE.
7. NO MAJOR LANDSCAPING OR STRUCTURES SHALL BE LOCATED WITHIN 10 FT OF METER VAULT.
8. PRESSURE REDUCING AND BACKFLOW DEVICES SHALL BE INSTALLED INSIDE BUILDING SERVED. INSTALL PER LATEST TOWN ADOPTED PLUMBING CODE.
9. REFER TO WATER AND SEWER CONSTRUCTION SPECIFICATIONS, CURRENT VERSION, FOR PRODUCT SPECIFICATIONS.

LEGEND
1 TYPE K COPPER TUBING
2 METER SETTER SUPPORT
3 METER SETTER
4 METER UNIT
5 48" CONCRETE MANHOLE
6 METER SETTER BYPASS

N.T.S.
WA-13

PROJECT:	TASK:	DATE:
800100	001	12-17-2013

PREPARED BY: TELESTO SOLUTIONS INCORPORATED

SETTING FOR 1 ½" & 2" METER

PREPARED FOR:

127 S. DENVER AVE
FT. LUPTON, CO 80621
www.westernec.com
email@westernec.com
(720) 685-9951
FAX (720) 294-1330
Western Engineering Consultants, inc LLC

No.	REVISION	DATE	BY
0	PRELIM/FINAL PLAT SUBMITTAL	08/06/19	CFC

KEENE LAND LLC
CONTACT: RICK ROBERTSON
8537 WCR 5
KEENESBURG, CO 80643
(303)961-0031

TOWN OF KEENESBURG DETAILS
MARKET STREET BUSINESS PARK SUBDIVISION
TOWN of KEENESBURG, WELD COUNTY, COLORADO

Dig Safely.
CALL UNCC
THREE WORKING DAYS BEFORE YOU DIG
811
www.uncc.org
UTILITY NOTIFICATION CENTER OF COLORADO

COLORADO REGISTERED PROFESSIONAL ENGINEER
CHRISTY F. FOX
FOR
33802
REVIEW ONLY
08/06/19
ONLY VALID FOR CONSTRUCTION IF SEAL & ORIGINAL SIGNATURE ARE ON EACH SHEET

INITIAL PLAN RELEASE: 08/06/19
DESIGNED BY: CFC
DRAWN BY: CFC
CHECKED BY: CFC
PROJECT NO. 01-0187.003.00
DOC CON # C2.16-DETAILS
SHT C2.16

Date: 12/12/2013 2:25:19 PM R:\www.wecs.pro\admin\2013\0187.00\admin-construction\0187.003\0_Kubota Setting.pr + 0_Kubota.dwg Plotted By: David Dixon
T:\0187_003_00-KEENE LAND-MARKET BUS PARK\Dwg\CDs\0187_003-WECI-CDS-2.00.dwg, C2.16-KNSBGDTLS, 8/16/2019 3:37:54 PM, _DWG To PDF.pc3, WEC 24"36, WEC 24"36

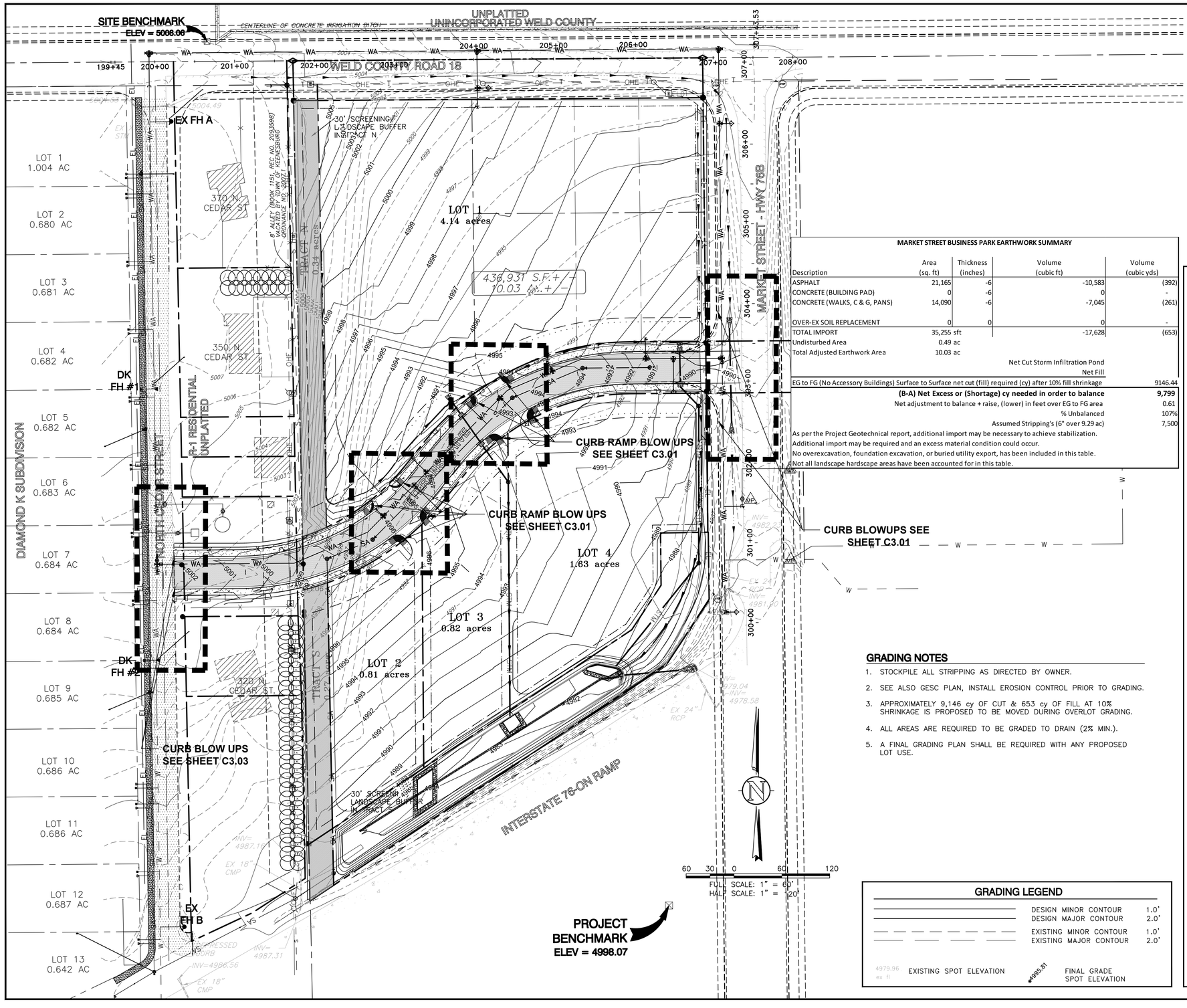

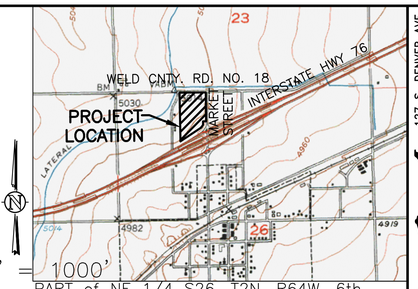

PART of NE 1/4 S26, T2N, R64W, 6th PM

SHOWN VICINITY MAP TAKEN FROM USGS QUAD – KEENESBURG 40104–A5

MARKET STREET BUSINESS PARK EARTHWORK SUMMARY

Description	Area (sq. ft)	Thickness (inches)	Volume (cubic ft)	Volume (cubic yds)
ASPHALT	21,165	-6	-10,583	(392)
CONCRETE (BUILDING PAD)	0	-6	0	-
CONCRETE (WALKS, C & G, PANS)	14,090	-6	-7,045	(261)
OVER-EX SOIL REPLACEMENT	0	0	0	-
TOTAL IMPORT	35,255 sft		-17,628	(653)
Undisturbed Area	0.49 ac			
Total Adjusted Earthwork Area	10.03 ac			
			Net Cut Storm Infiltration Pond	
			Net Fill	
EG to FG (No Accessory Buildings) Surface to Surface net cut (fill) required (cy) after 10% fill shrinkage				9146.44
(B-A) Net Excess or (Shortage) cy needed in order to balance				**9,799**
Net adjustment to balance + raise, (lower) in feet over EG to FG area				0.61
% Unbalanced				107%
Assumed Stripping's (6" over 9.29 ac)				7,500

As per the Project Geotechnical report, additional import may be necessary to achieve stabilization.
Additional import may be required and an excess material condition could occur.
No overexcavation, foundation excavation, or buried utility export, has been included in this table.
Not all landscape hardscape areas have been accounted for in this table.

GRADING NOTES

1. STOCKPILE ALL STRIPPING AS DIRECTED BY OWNER.
2. SEE ALSO GESC PLAN, INSTALL EROSION CONTROL PRIOR TO GRADING.
3. APPROXIMATELY 9,146 cy OF CUT & 653 cy OF FILL AT 10% SHRINKAGE IS PROPOSED TO BE MOVED DURING OVERLOT GRADING.
4. ALL AREAS ARE REQUIRED TO BE GRADED TO DRAIN (2% MIN.).
5. A FINAL GRADING PLAN SHALL BE REQUIRED WITH ANY PROPOSED LOT USE.

GRADING LEGEND

	DESIGN MINOR CONTOUR	1.0'
	DESIGN MAJOR CONTOUR	2.0'
	EXISTING MINOR CONTOUR	1.0'
	EXISTING MAJOR CONTOUR	2.0'
4979.96 ex fl	EXISTING SPOT ELEVATION	4995.81 FINAL GRADE SPOT ELEVATION

NOTES

THIS PLAN IS INTENDED AS THE OVERLOT GRADING PLAN FOR MARKET STREET BUSINESS PARK SUBDIVISON.

ALL IMPROVEMENTS ARE PROPOSED UNLESS NOTED AS EXISTING.

IT IS THE OWNER AND/OR THE CONTRACTOR'S RESPONSIBILITY TO ATTAIN ALL APPROPRIATE PERMITS AND REVIEW APPROVALS FROM THE STATE OF COLORADO AND TOWN OF KEENESBURG RESPECTIVELY.

SEE "AS BUILT/BOUNDARY SURVEY" COMPLETED BY AMERICAN WEST LAND SURVEY – DATED MAY 24, 2006.

SEE COVER SHEET FOR PROJECT BENCHMARK AND BASIS OF BEARING.

SITE BENCHMARK WAS ESTABLISHED BEING A 3" BRASS CAP IN CONCRETE LYING FIVE FEET WEST OF A CONCRETE IRRIGATION DITCH NEAR THE INTERSECTION OF COUNTY ROAD 18 AND NORTH CEDAR STREET, AND THIRTY FEET NORTH OF THE CENTERLINE OF COUNTY ROAD 18. STAMPED "NATIONAL GEODETIC SURVEY ACD 1" HAVING AN ELEVATION OF 5008.06 FEET (NAVD 1988)

ANY REFERENCE TO EASEMENTS, SURVEY POINTS, OR EXISTING UTILITIES AND FEATURES ARE BASED SOLELY FROM SURVEY INFORMATION PROVIDED BY OTHERS – SPECIFICALLY PER SAME SURVEY NOTED ABOVE.

NOT ALL UNCC UTILITY LOCATES HAVE BEEN PERFORMED. IT IS THE CONTRACTOR'S RESPONSIBILITY TO VERIFY ALL UTILITIES ARE LOCATED AND SURVEY PROVIDED TO THE OWNER AND ENGINEER PRIOR TO CONSTRUCTION DRAWING RELEASE.

BUILDING SETBACKS FRONT/REAR = 25', SIDES = 10' PER ZONE DISTRICT HIGHWAY COMMERICAL (CH).

SYMBOL LEGEND

- 45 DEG BEND
- 22.5 DEG BEND
- RESTRAINED PLUG
- RESTRAINED TEE
- WATER METER
- RESTRAINED CROSS
- FIRE HYDRANT
- RESTRAINED WATER VALVE
- PIPE CROSSOVER
- MANHOLE
- PROPOSED ASPHALT PAVING

LINETYPE LEGEND

- LOT / PROPERTY LINE
- RIGHT OF WAY LINE
- EASEMENT
- SETBACK
- TO BE ABANDONED LOT LINE
- EXISTING BUILDING, CURB
- EDGE of ASPHALT or GRAVEL RD
- CHAINLINK FENCE
- WIRE FENCE
- POND WQ W/S
- SWALE
- OHE — EXISTING OVERHEAD ELEC
- E — EXISTING ELECTICAL LINE
- ST — EXISTING STORM LINE
- S — EXISTING SANITARY LINE
- W — EXISTING WATER LINE
- G — EXISTING GAS LINE
- FIBER — EXISTING FIBER OPTIC LINE
- T — EXISTING TELEPHONE LINE
- SA — PROPOSED SANITARY LINE
- SS — PROPOSED SANITARY SERVICE
- STM — PROPOSED STORM LINE
- WA — PROPOSED WATER LINE
- WAS — PROPOSED WATER SERVICE
- GA — PROPOSED GAS LINE
- EL — PROPOSED ELECTRIC LINE
- PH — PROPOSED TELEPHONE LINE

127 S. DENVER AVE
FT. LUPTON, CO 80621
www.westernec.com
email@westernec.com
(720) 685-9951
FAX (720) 294-1330
Western Engineering Consultants, inc LLC

No.	REVISION	DATE	BY
0	PRELIM/FINAL PLAT SUBMITTAL	08/06/19	CFC

KEENE LAND LLC
CONTACT: RICK ROBERTSON
853 W 6th
KEENESBURG, CO 80643
(303)961-0031

OVERLOT GRADING PLAN
MARKET STREET BUSINESS PARK SUBDIVISION
TOWN of KEENESBURG, WELD COUNTY, COLORADO

Dig Safely.
CALL UNCC
THREE WORKING DAYS BEFORE YOU DIG
811
www.uncc.org
UTILITY NOTIFICATION CENTER OF COLORADO

COLORADO REGISTERED PROFESSIONAL ENGINEER
CHRISTOPHER FOX CARNEY
FOR REVIEW ONLY
08/06/19
33802
PROFESSIONAL ENGINEER
ONLY VALID WITH ORIGINAL SIGNATURE & SEAL IN ORIGINAL SIGNATURE BOX ON EACH SHEET

INITIAL PLAN RELEASE: 08/06/19
DESIGNED BY: CFC
DRAWN BY: CFC
CHECKED BY: CFC
PROJECT NO: 01-0187.003.00
DOC CON #: C3.00-OVGRADE
SHT C3.00

T:\0187_003_00-KEENE LAND-MARKET BUS PARK\Dwg\CDs\0187_003-WECI-CDS-3.00.dwg, C3.00-OVGRAD, 8/16/2019 3:40:36 PM, DWG To PDF.pc3, WEC 24*36, WEC 24*36

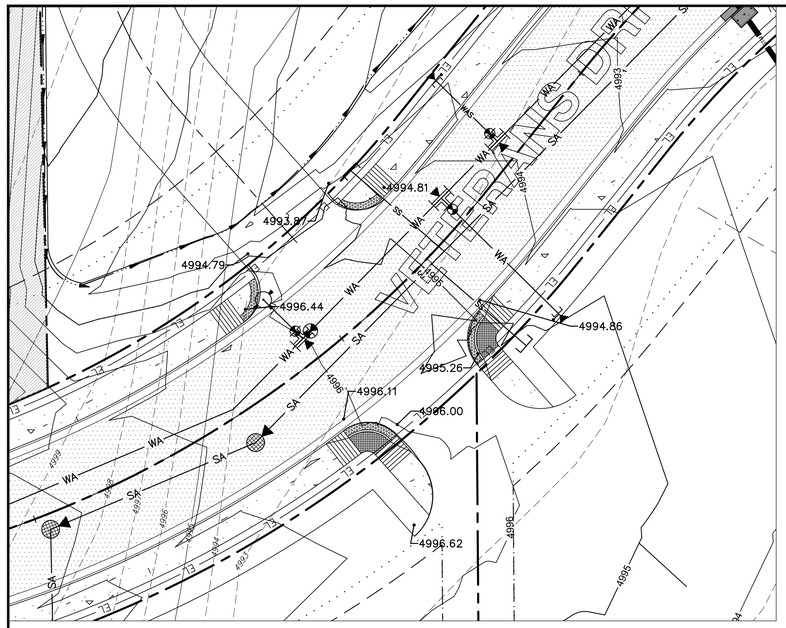

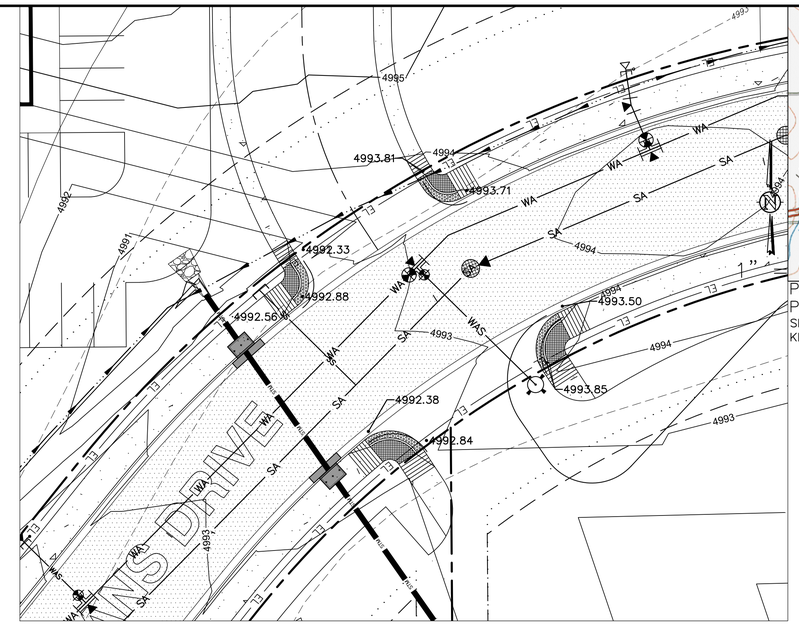

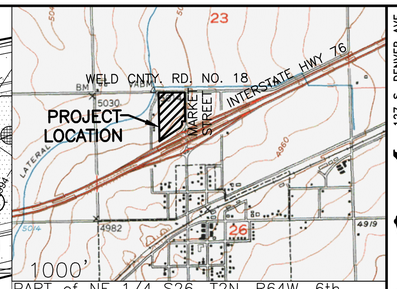

PART of NE 1/4 S26, T2N, R64W, 6th PM

SHOWN VICINITY MAP TAKEN FROM USGS QUAD – KEENESBURG 40104–A5

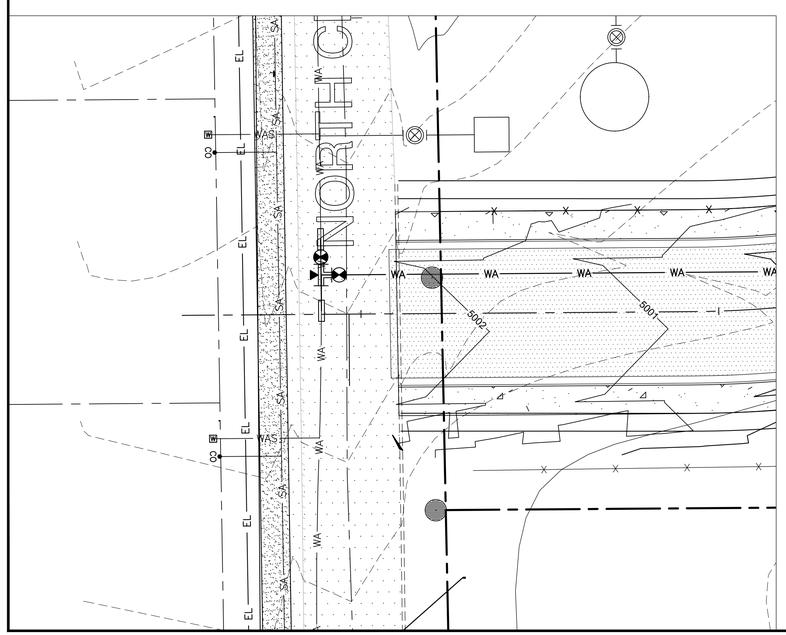

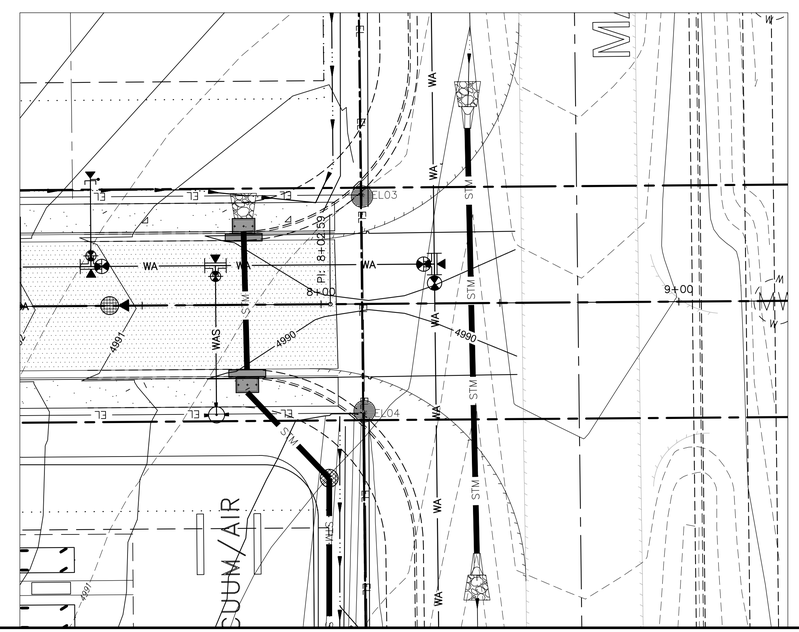

N

20 10 0 20 40

FULL SCALE: 1" = 20'
HALF SCALE: 1" = 40'

GRADING LEGEND

	DESIGN MINOR CONTOUR	1.0'
	DESIGN MAJOR CONTOUR	2.0'
	EXISTING MINOR CONTOUR	1.0'
	EXISTING MAJOR CONTOUR	2.0'
4979.96 ex fl	EXISTING SPOT ELEVATION	
×4995.81	FINAL GRADE SPOT ELEVATION	

GRADING NOTES

1. STOCKPILE ALL STRIPPING AS DIRECTED BY OWNER.
2. SEE ALSO GESC PLAN, INSTALL EROSION CONTROL PRIOR TO GRADING.
3. APPROXIMATELY 9,146 cy OF CUT & 653 cy OF FILL AT 10% SHRINKAGE IS PROPOSED TO BE MOVED DURING OVERLOT GRADING.
4. ALL AREAS ARE REQUIRED TO BE GRADED TO DRAIN (2% MIN.).
5. A FINAL GRADING PLAN SHALL BE REQUIRED WITH ANY PROPOSED LOT USE.

127 S. DENVER AVE
FT. LUPTON, CO 80621
www.westernecl.com
email@westernecl.com
(720) 685-9951
FAX (720) 294-1330
Western Engineering Consultants, inc LLC

No.	REVISION	DATE	BY
0	PRELIM/FINAL PLAT SUBMITTAL	08/06/19	CFC

KEENE LAND, LLC
CONTACT: RICK ROBERTSON
853 MAIN ST
KEENESBURG, CO 80643
(303)961-0031

GRADING DETAILS
MARKET STREET BUSINESS PARK SUBDIVISION
TOWN of KEENESBURG, WELD COUNTY, COLORADO

Dig Safely.
CALL UNCC
THREE WORKING DAYS BEFORE YOU DIG
811
www.uncc.org
UTILITY NOTIFICATION CENTER OF COLORADO

COLORADO REGISTERED PROFESSIONAL ENGINEER
CHAWIN F. CHOW
FOR
33802
REVIEW ONLY
08/06/19
ONLY VALID FOR CONSTRUCTION IF SEALED, SIGNED, DATED & NOT ELECTRONICALLY SIGNED

INITIAL PLAN RELEASE: 08/06/19
DESIGNED BY: CFC
DRAWN BY: CFC
CHECKED BY: CFC
PROJECT NO. 01-0187.003.00
DOC CON # C3.01-C&GDTL
SHT C3.01

T:\0187_003_00-KEENE LAND-MARKET BUS PARK\Dwg\Cds\0187_003-WEC\CDS-3.00.dwg, C3.01-C&GDTL, 8/16/2019 3:40:46 PM, DWG To PDF.pc3, WEC 24*36, WEC 24*36

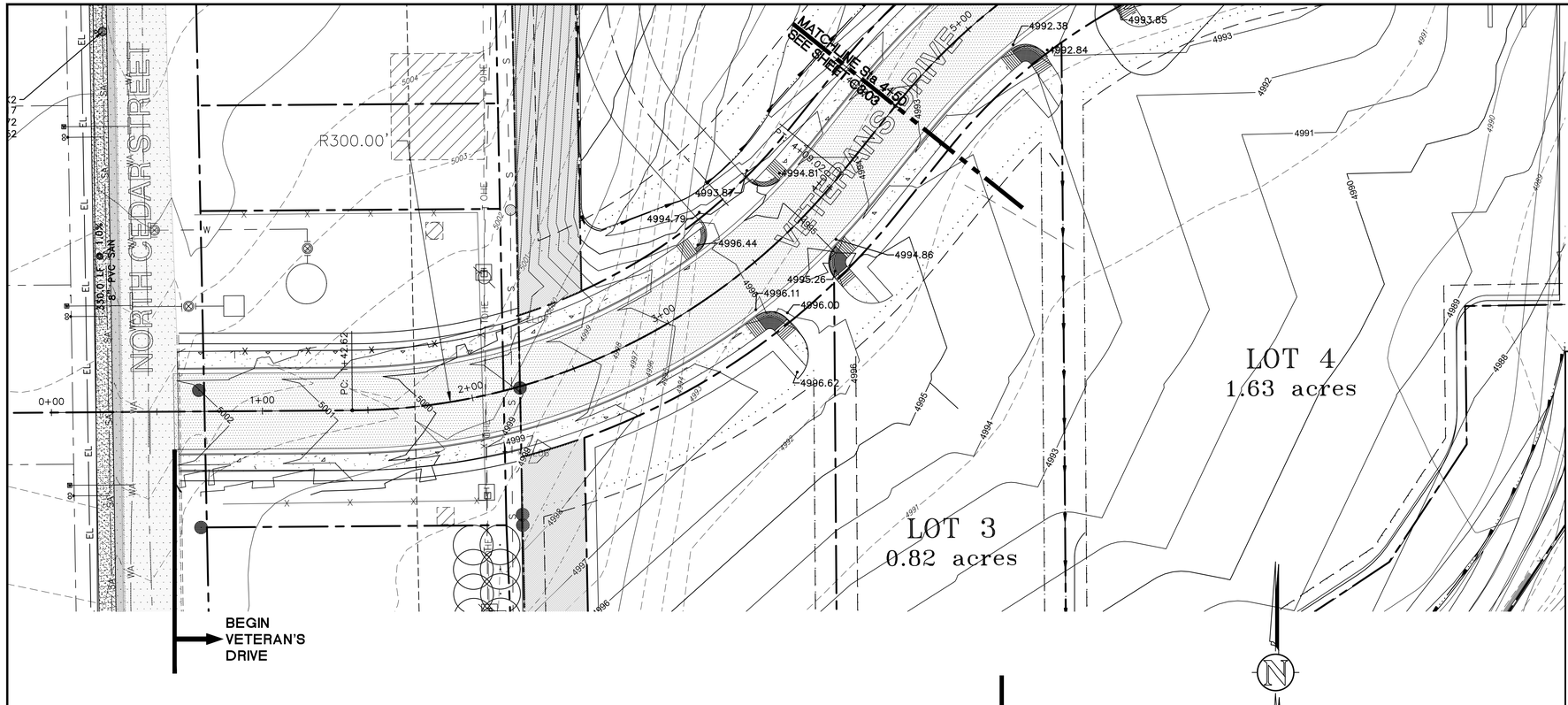

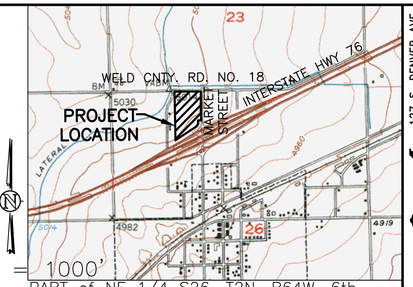

PART of NE 1/4 S26, T2N, R64W, 6th PM

SHOWN VICINITY MAP TAKEN FROM USGS QUAD – KEENESBURG 40104–A5

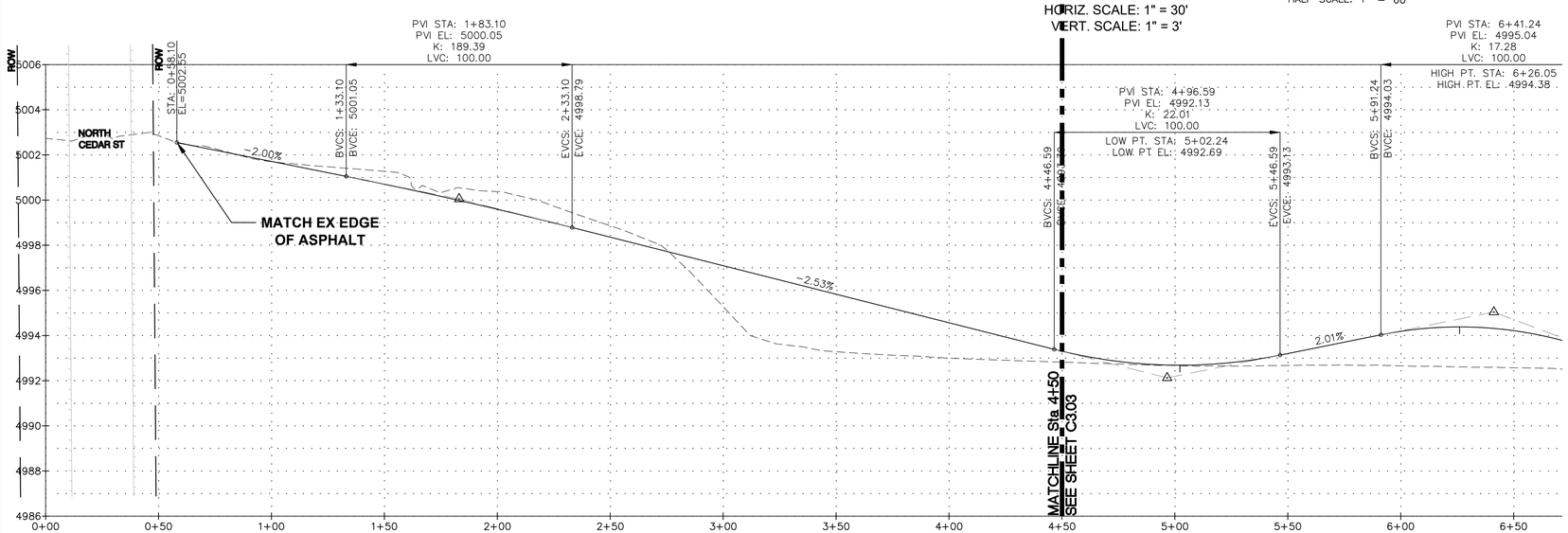

NOTES

THIS PLAN IS INTENDED AS THE OVERLOT GRADING PLAN FOR MARKET STREET BUSINESS PARK SUBDIVISON.

ALL IMPROVEMENTS ARE PROPOSED UNLESS NOTED AS EXISTING.

IT IS THE OWNER AND/OR THE CONTRACTOR'S RESPONSIBILITY TO ATTAIN ALL APPROPRIATE PERMITS AND REVIEW APPROVALS FROM THE STATE OF COLORADO AND TOWN OF KEENESBURG RESPECTIVELY.

SEE "AS BUILT/BOUNDARY SURVEY" COMPLETED BY AMERICAN WEST LAND SURVEY – DATED MAY 24, 2006.

SEE COVER SHEET FOR PROJECT BENCHMARK AND BASIS OF BEARING.

SITE BENCHMARK WAS ESTABLISHED BEING A 3" BRASS CAP IN CONCRETE LYING FIVE FEET WEST OF A CONCRETE IRRIGATION DITCH NEAR THE INTERSECTION OF COUNTY ROAD 18 AND NORTH CEDAR STREET, AND THIRTY FEET NORTH OF THE CENTERLINE OF COUNTY ROAD 18. STAMPED "NATIONAL GEODETIC SURVEY ACD 1" HAVING AN ELEVATION OF 5008.06 FEET (NAVD 1988)

ANY REFERENCE TO EASEMENTS, SURVEY POINTS, OR EXISTING UTILITIES AND FEATURES ARE BASED SOLELY FROM SURVEY INFORMATION PROVIDED BY OTHERS – SPECIFICALLY PER SAME SURVEY NOTED ABOVE.

NOT ALL UNCC UTILITY LOCATES HAVE BEEN PERFORMED. IT IS THE CONTRACTOR'S RESPONSIBILITY TO VERIFY ALL UTILITIES ARE LOCATED AND SURVEY PROVIDED TO THE OWNER AND ENGINEER PRIOR TO CONSTRUCTION DRAWING RELEASE.

BUILDING SETBACKS FRONT/REAR = 25', SIDES = 10' PER ZONE DISTRICT HIGHWAY COMMERICAL (CH).

SYMBOL LEGEND

- 45 DEG BEND
- 22.5 DEG BEND
- RESTRAINED PLUG
- RESTRAINED TEE
- WATER METER
- RESTRAINED CROSS
- FIRE HYDRANT
- RESTRAINED WATER VALVE
- PIPE CROSSOVER
- MANHOLE
- PROPOSED ASPHALT PAVING

LINETYPE LEGEND

- LOT / PROPERTY LINE
- RIGHT OF WAY LINE
- EASEMENT
- SETBACK
- TO BE ABANDONED LOT LINE
- EXISTING BUILDING, CURB
- EDGE of ASPHALT or GRAVEL RD
- CHAINLINK FENCE
- WIRE FENCE
- POND WQ W/S
- SWALE
- OHE — EXISTING OVERHEAD ELEC
- E — EXISTING ELECTICAL LINE
- S — EXISTING STORM LINE
- S — EXISTING SANITARY LINE
- W — EXISTING WATER LINE
- G — EXISTING GAS LINE
- FIBER — EXISTING FIBER OPTIC LINE
- T — EXISTING TELEPHONE LINE
- SA — PROPOSED SANITARY LINE
- SS — PROPOSED SANITARY SERVICE
- STM — PROPOSED STORM LINE
- WA — PROPOSED WATER LINE
- WAS — PROPOSED WATER SERVICE
- GA — PROPOSED GAS LINE
- EL — PROPOSED ELECTRIC LINE
- PH — PROPOSED TELEPHONE LINE

127 S. DENVER AVE
FT. LUPTON, CO 80621
www.westernec.com
email@westernec.com
(720) 685-9951
FAX (720) 294-1330
Western Engineering Consultants, inc LLC

No.	REVISION	DATE	BY
0	PRELIM/FINAL PLAT SUBMITTAL	08/06/19	CFC

KEENE LAND LLC
CONTACT: RICK ROBERTSON
853 W 6th
KEENESBURG, CO 80643
(303)961-0031

VETERAN'S DRIVE PLAN & PROFILE
MARKET STREET BUSINESS PARK SUBDIVISION
TOWN of KEENESBURG, WELD COUNTY, COLORADO

Dig Safely.
CALL UNCC
THREE WORKING DAYS BEFORE YOU DIG
811
www.uncc.org
UTILITY NOTIFICATION CENTER OF COLORADO

COLORADO REGISTERED PROFESSIONAL ENGINEER
CHRISTIAN F. CONTI
FOR
33802
REVIEW ONLY
08/06/19
ONLY VALID FOR CONSTRUCTION IF SEAL & ORIGINAL SIGNATURE ARE ON EACH SHEET

INITIAL PLAN RELEASE: 08/06/19
DESIGNED BY: CFC
DRAWN BY: CFC
CHECKED BY: CFC
PROJECT NO. 01-0187.003.00
DOC CON # C3.02-VETP&P
SHT C3.02

T:\0187_003_00\KEENE LAND-MARKET BUS PARK\Dwg\CDs\0187_003-WECI-CDS-3.00.dwg, C3.02-VETDR P&P, 8/16/2019 3:40:56 PM, DWG To PDF.pc3, WEC 24*36, WEC 24*36, WEC 24*36

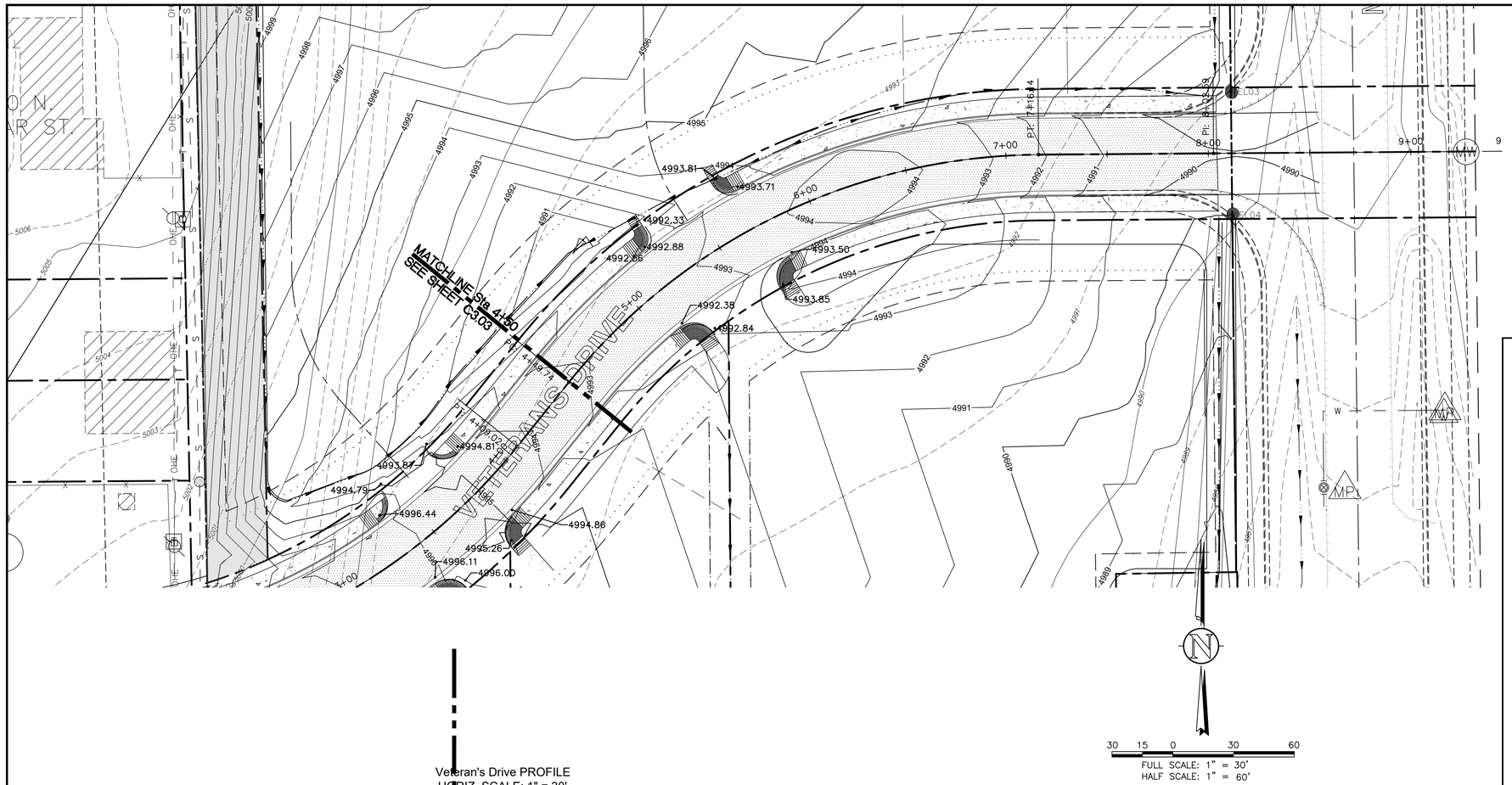

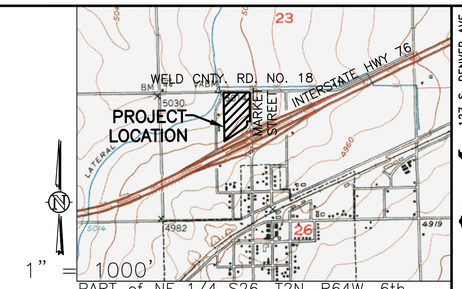

1" = 1000'

PART of NE 1/4 S26, T2N, R64W, 6th PM

SHOWN VICINITY MAP TAKEN FROM USGS QUAD – KEENESBURG 40104–A5

NOTES

THIS PLAN IS INTENDED AS THE OVERLOT GRADING PLAN FOR MARKET STREET BUSINESS PARK SUBDIVISON.

ALL IMPROVEMENTS ARE PROPOSED UNLESS NOTED AS EXISTING.

IT IS THE OWNER AND/OR THE CONTRACTOR'S RESPONSIBILITY TO ATTAIN ALL APPROPRIATE PERMITS AND REVIEW APPROVALS FROM THE STATE OF COLORADO AND TOWN OF KEENESBURG RESPECTIVELY.

SEE "AS BUILT/BOUNDARY SURVEY" COMPLETED BY AMERICAN WEST LAND SURVEY – DATED MAY 24, 2006.

SEE COVER SHEET FOR PROJECT BENCHMARK AND BASIS OF BEARING.

SITE BENCHMARK WAS ESTABLISHED BEING A 3" BRASS CAP IN CONCRETE LYING FIVE FEET WEST OF A CONCRETE IRRIGATION DITCH NEAR THE INTERSECTION OF COUNTY ROAD 18 AND NORTH CEDAR STREET, AND THIRTY FEET NORTH OF THE CENTERLINE OF COUNTY ROAD 18. STAMPED "NATIONAL GEODETIC SURVEY ACD 1" HAVING AN ELEVATION OF 5008.06 FEET (NAVD 1988)

ANY REFERENCE TO EASEMENTS, SURVEY POINTS, OR EXISTING UTILITIES AND FEATURES ARE BASED SOLELY FROM SURVEY INFORMATION PROVIDED BY OTHERS – SPECIFICALLY PER SAME SURVEY NOTED ABOVE.

NOT ALL UNCC UTILITY LOCATES HAVE BEEN PERFORMED. IT IS THE CONTRACTOR'S RESPONSIBILITY TO VERIFY ALL UTILITIES ARE LOCATED AND SURVEY PROVIDED TO THE OWNER AND ENGINEER PRIOR TO CONSTRUCTION DRAWING RELEASE.

BUILDING SETBACKS FRONT/REAR = 25', SIDES = 10' PER ZONE DISTRICT HIGHWAY COMMERICAL (CH).

SYMBOL LEGEND

- 45 DEG BEND
- 22.5 DEG BEND
- RESTRAINED PLUG
- RESTRAINED TEE
- WATER METER
- RESTRAINED CROSS
- FIRE HYDRANT
- RESTRAINED WATER VALVE
- PIPE CROSSOVER
- MANHOLE
- PROPOSED ASPHALT PAVING

LINETYPE LEGEND

- LOT / PROPERTY LINE
- RIGHT OF WAY LINE
- EASEMENT
- SETBACK
- TO BE ABANDONED LOT LINE
- EXISTING BUILDING, CURB
- EDGE of ASPHALT or GRAVEL RD
- CHAINLINK FENCE
- WIRE FENCE
- POND WQ W/S
- SWALE
- OHE — EXISTING OVERHEAD ELEC
- E — EXISTING ELECTICAL LINE
- ST — EXISTING STORM LINE
- S — EXISTING SANITARY LINE
- W — EXISTING WATER LINE
- G — EXISTING GAS LINE
- FIBER — EXISTING FIBER OPTIC LINE
- T — EXISTING TELEPHONE LINE
- SA — PROPOSED SANITARY LINE
- SS — PROPOSED SANITARY SERVICE
- STM — PROPOSED STORM LINE
- WA — PROPOSED WATER LINE
- WAS — PROPOSED WATER SERVICE
- GA — PROPOSED GAS LINE
- EL — PROPOSED ELECTRIC LINE
- PH — PROPOSED TELEPHONE LINE

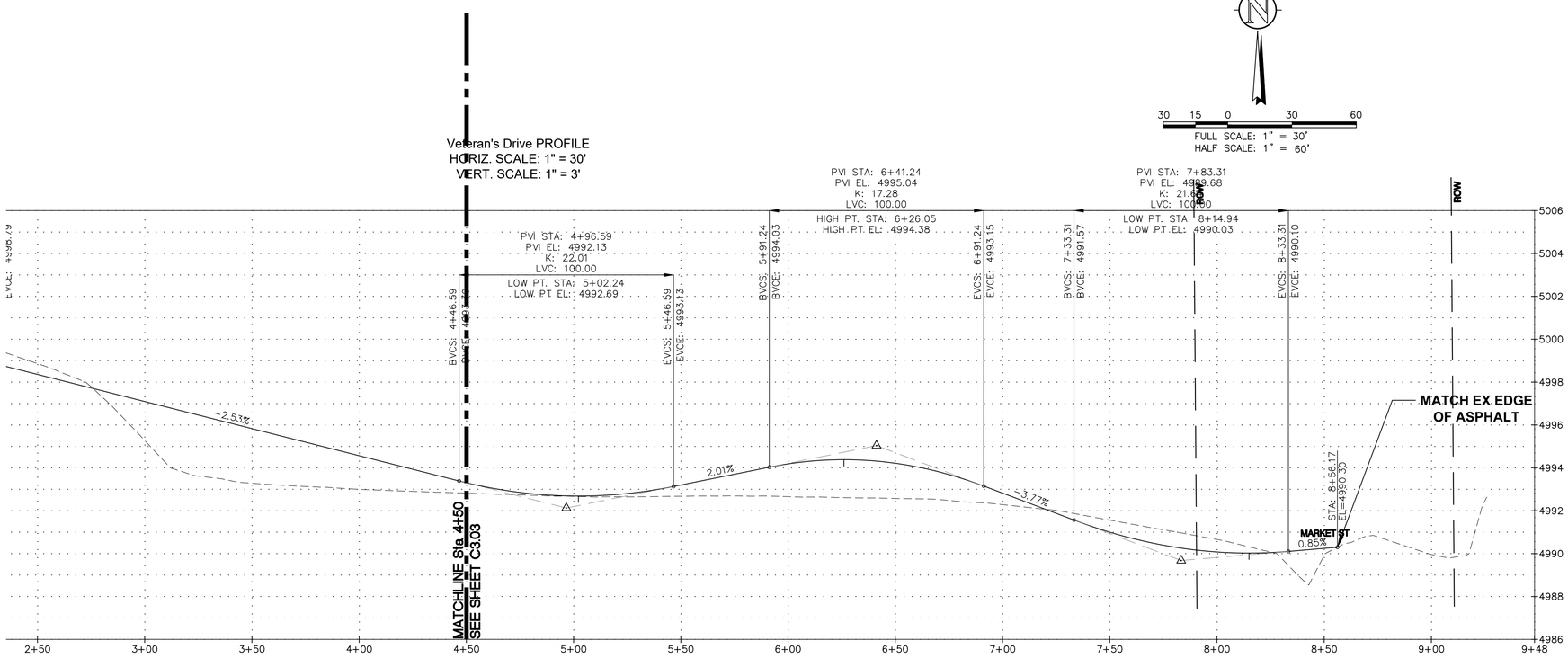

127 S. DENVER AVE
FT. LUPTON, CO 80621
www.westernec.com
email@westernec.com
(720) 685-9951
FAX (720) 294-1330
Western Engineering Consultants, inc LLC

No.	REVISION	DATE	BY
0	PRELIM/FINAL PLAT SUBMITTAL	08/06/19	CFC

KEENE LAND LLC
CONTACT: RICK ROBERTSON
853 W 5
KEENESBURG, CO 80643
(303)961-0031

VETERAN'S DRIVE PLAN & PROFILE
MARKET STREET BUSINESS PARK SUBDIVISION
TOWN of KEENESBURG, WELD COUNTY, COLORADO

Dig Safely.
CALL UNCC
THREE WORKING DAYS BEFORE YOU DIG
811
www.uncc.org
UTILITY NOTIFICATION CENTER OF COLORADO

COLORADO REGISTERED PROFESSIONAL ENGINEER
DARWIN P. ROSS
FOR REVIEW ONLY
08/06/19
33802
ONLY VALID FOR CONSTRUCTION IF SEAL & ORIGINAL SIGNATURE ARE ON EACH SHEET

INITIAL PLAN RELEASE: 08/06/19
DESIGNED BY: CFC
DRAWN BY: CFC
CHECKED BY: CFC
PROJECT NO. 01-0187.003.00
DOC CON # C3.03-VETP&P
SHT C3.03

T:\0187_003_00-KEENE LAND-MARKET BUS PARK\Dwg\CDs\0187_003-WEC\-CDS-3.00.dwg, C3.03-VETDR P&P, 8/16/2019 3:41:06 PM, _DWG To PDF.pc3, WEC 24"36, WEC 24"36

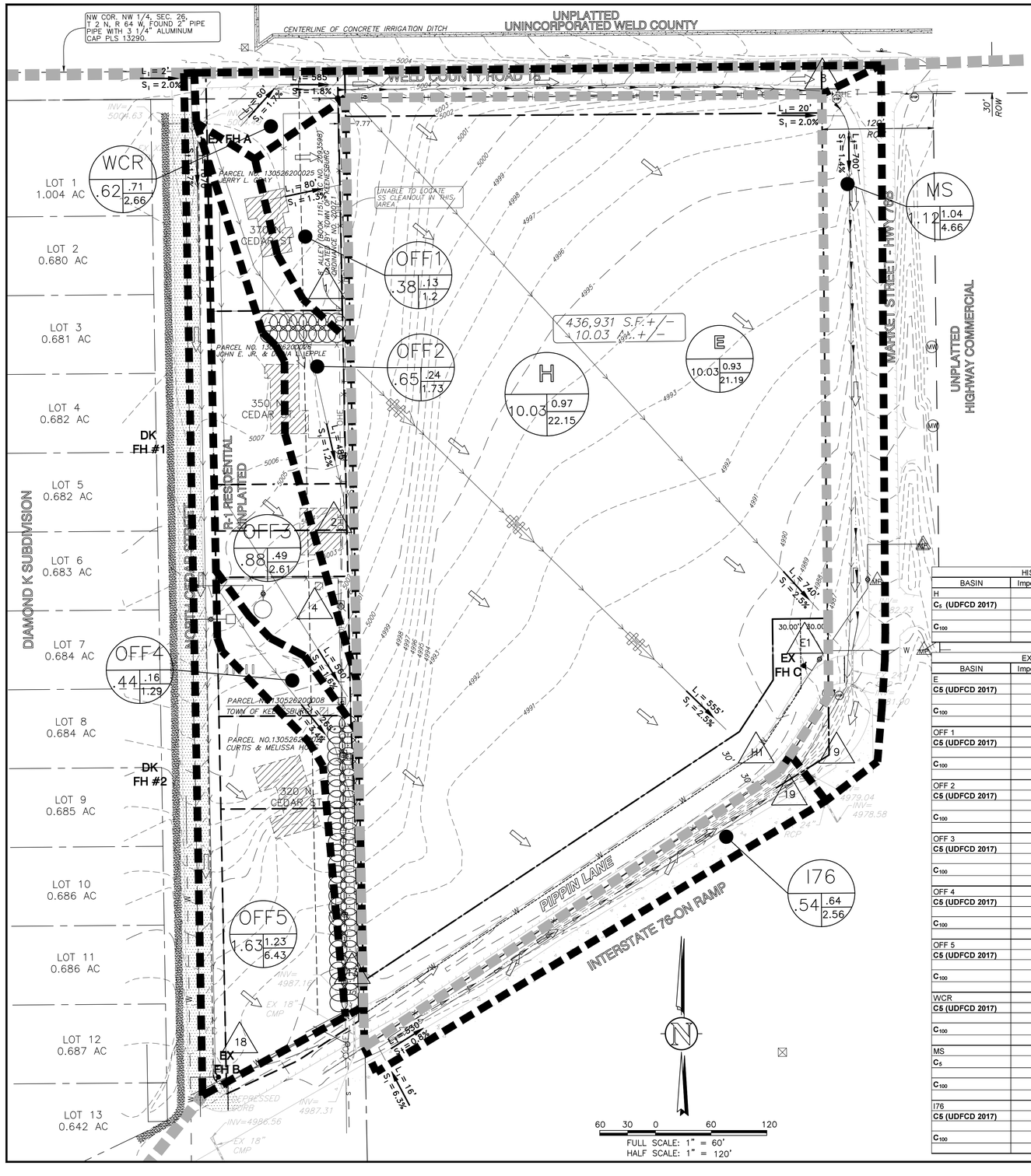

EXISTING DRAINAGE LEGEND

E — EXISTING SUB-BASIN DESIGNATION
1.12 .73 .83 — C5, C100, AREA IN ACRES
8 — DESIGN POINT
EXISTING BASIN
EXISTING DRAINAGE PATTERN

HISTORIC DRAINAGE LEGEND

H — HISTORIC SUB-BASIN DESIGNATION
1.12 .73 .83 — C5, C100, AREA IN ACRES
HISTORIC BASIN
HISTORIC DRAINAGE PATTERN

L - INITIAL LENGTH
S - INTIAL SLOPE
L - TRAVEL LENGTH
S - TRAVEL SLOPE

$L_i = Li$, $S_i = Si$
$L_t = Lt$, $S_t = St$

* AVERAGE SLOPE INCLUDES ROOF SLOPE OF 8.33%

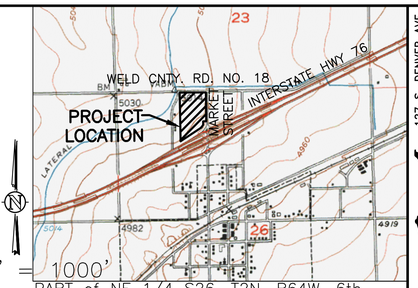

PART of NE 1/4 S26, T2N, R64W, 6th PM
SHOWN VICINITY MAP TAKEN FROM USGS QUAD – KEENESBURG 40104–A5

NOTES

THIS PLAN IS INTENDED AS THE HISTORIC AND EXISTING DRAINAGE PLAN FOR MARKET STREET BUSINESS PARK SUBDIVISION.

ALL IMPROVEMENTS ARE PROPOSED UNLESS NOTED AS EXISTING.

IT IS THE OWNER AND/OR THE CONTRACTOR'S RESPONSIBILITY TO ATTAIN ALL APPROPRIATE PERMITS AND REVIEW APPROVALS FROM THE STATE OF COLORADO AND CITY OF BRIGHTON RESPECTIVELY.

SEE "AS BUILT/BOUNDARY SURVEY" COMPLETED BY AMERICAN WEST LAND SURVEY – DATED MAY 24, 2006.

SEE COVER FOR PROJECT BENCHMARK AND BASIS OF BEARING.

SITE BENCHMARK WAS ESTABLISHED BEING A 3" BRASS CAP IN CONCRETE LYING FIVE FEET WEST OF A CONCRETE IRRIGATION DITCH NEAR THE INTERSECTION OF COUNTY ROAD 18 AND NORTH CEDAR STREET, AND THIRTY FEET NORTH OF THE CENTERLINE OF COUNTY ROAD 18. STAMPED "NATIONAL GEODETIC SURVEY ACD 1" HAVING AN ELEVATION OF 5008.06 FEET (NAVD 1988)

ANY REFERENCE TO EASEMENTS, SURVEY POINTS, OR EXISTING UTILITIES AND FEATURES ARE BASED SOLELY FROM SURVEY INFORMATION PROVIDED BY OTHERS – SPECIFICALLY PER SAME SURVEY NOTED ABOVE.

NOT ALL UNCC UTILITY LOCATES HAVE BEEN PERFORMED. IT IS THE CONTRACTOR'S RESPONSIBILITY TO VERIFY ALL UTILITIES ARE LOCATED AND SURVEY PROVIDED TO THE OWNER AND ENGINEER PRIOR TO CONSTRUCTION DRAWING RELEASE.

SIZES OF EXISTING UTILITIES AS TAKEN FROM 'CITY OF BRIGHTON WATER AND SEWER MAPS DATED JUNE 2004.

SYMBOL LEGEND

- 45 DEG BEND
- 22.5 DEG BEND
- RESTRAINED PLUG
- RESTRAINED TEE
- WATER METER
- RESTRAINED CROSS
- FIRE HYDRANT
- RESTRAINED WATER VALVE
- PIPE CROSSOVER
- MANHOLE
- PARKING STALL COUNT

LINETYPE LEGEND

- LOT / PROPERTY LINE
- RIGHT OF WAY LINE
- EASEMENT
- TO BE ABANDONED LOT LINE
- EXISTING BUILDING, CURB
- EDGE of ASPHALT
- CHAINLINK FENCE
- WIRE FENCE
- POND WQ W/S
- SWALE
- OHE — EXISTING OVERHEAD ELEC
- E — EXISTING ELECTICAL LINE
- S — EXISTING STORM LINE
- SS — EXISTING SANITARY LINE
- W — EXISTING WATER LINE
- G — EXISTING GAS LINE
- FIBER — EXISTING FIBER OPTIC LINE
- T — EXISTING TELEPHONE LINE
- SA — PROPOSED SANITARY LINE
- SS — PROPOSED SANITARY SERVICE
- STM — PROPOSED STORM LINE
- WA — PROPOSED WATER LINE
- WAS — PROPOSED WATER SERVICE
- GA — PROPOSED GAS LINE
- EL — PROPOSED ELECTRIC LINE
- PH — PROPOSED TELEPHONE LINE

HISTORIC RUNOFF TABLE (KEENE LAND MARKET BUS PARK)

BASIN	Impervious	C-YR	I	A	CIA(YR-historic)	Flow	DESIGN POINT
H							
C_5 (UDFCD 2017)	2.00	0.05	1.93	10.03	0.97	cfs	H1
C_{100}	2.00	0.49	4.51	10.03	22.15	cfs	H1

EXISTING RUNOFF TABLE (KEENE LAND MARKET BUS PARK)

BASIN	Impervious	C-YR	I	A	CIA(YR-existing)	Flow	DESIGN POINT	
E								
C5 (UDFCD 2017)	2.00	0.05	1.85	10.03	0.93	cfs	E1	
C_{100}	2.00	0.49	4.31	10.03	21.19	cfs	E1	
OFF 1								
C5 (UDFCD 2017)	15.50	0.14	2.63	0.38	0.13	cfs	1	1
C_{100}	15.50	0.51	6.14	0.38	1.20	cfs	1	
OFF 2								
C5 (UDFCD 2017)	18.56	0.17	2.09	0.65	0.24	cfs	2	2
C_{100}	18.56	0.54	4.87	0.65	1.73	cfs	2	
OFF 3								
C5 (UDFCD 2017)	29.19	0.26	2.15	0.88	0.49	cfs	4	4
C_{100}	29.19	0.59	5.02	0.88	2.61	cfs	4	
OFF 4								
C5 (UDFCD 2017)	15.39	0.16	2.33	0.44	0.16	cfs	13	13
C_{100}	15.39	0.55	5.43	0.44	1.29	cfs	13	
OFF 5								
C5 (UDFCD 2017)	28.90	0.27	2.83	1.63	1.23	cfs	18	18
C_{100}	28.90	0.60	6.61	1.63	6.43	cfs	18	
WCR								
C5 (UDFCD 2017)	47.74	0.42	2.76	0.62	0.71	cfs	8	8
C_{100}	47.74	0.67	6.44	0.62	2.66	cfs	8	
MS								
C_5	35.86	0.33	2.83	1.12	1.04	cfs	9	9
C_{100}	35.86	0.63	6.59	1.12	4.66	cfs	9	
I76								
C5 (UDFCD 2017)	42.92	0.38	3.08	0.54	0.64	cfs	19	19
C_{100}	42.92	0.66	7.19	0.54	2.56	cfs	19	

127 S. DENVER AVE
FT. LUPTON, CO 80621
www.westernec.com
email@westernec.com
(720) 685-9951
FAX (720) 294-1330
Western Engineering Consultants, inc LLC

No.	REVISION	DATE	BY
0	PRELIM/FINAL PLAT SUBMITTAL	08/06/19	CFC
1	UPDATED DRAINAGE–TOWN SUBMITTAL	08/16/19	CFC

KEENE LAND LLC
CONTACT: RICK ROBERTSON
8537 WCR 5
KEENESBURG, CO 80643
(303)961-0031

HISTORIC & EXISTING DRAINAGE PLAN
MARKET STREET BUSINESS PARK SUBDIVISION
TOWN of KEENESBURG, WELD COUNTY, COLORADO

Dig Safely.
CALL UNCC
THREE WORKING DAYS BEFORE YOU DIG
811
www.uncc.org
UTILITY NOTIFICATION CENTER OF COLORADO

COLORADO REGISTERED PROFESSIONAL ENGINEER
FOR REVIEW ONLY
08/16/19
ONLY VALID FOR CONSTRUCTION IF SEAL & ORIGINAL SIGNATURE ARE ON EACH SHEET

INITIAL PLAN RELEASE: 08/06/19
DESIGNED BY: CFC
DRAWN BY: CFC
CHECKED BY: CFC

PROJECT NO. 01-0187.003.00
DOC CON # C4.00-EXDRNG
SHT C4.00

T:\0187_003_00-KEENE LAND-MARKET BUS PARK\Dwg\CDs\0187_003-WECI-CDS-4.00.dwg, C4.00-EX DRNG, 8/16/2019 3:42:55 PM, _DWG To PDF.pc3, WEC 24*36, WEC 24*36

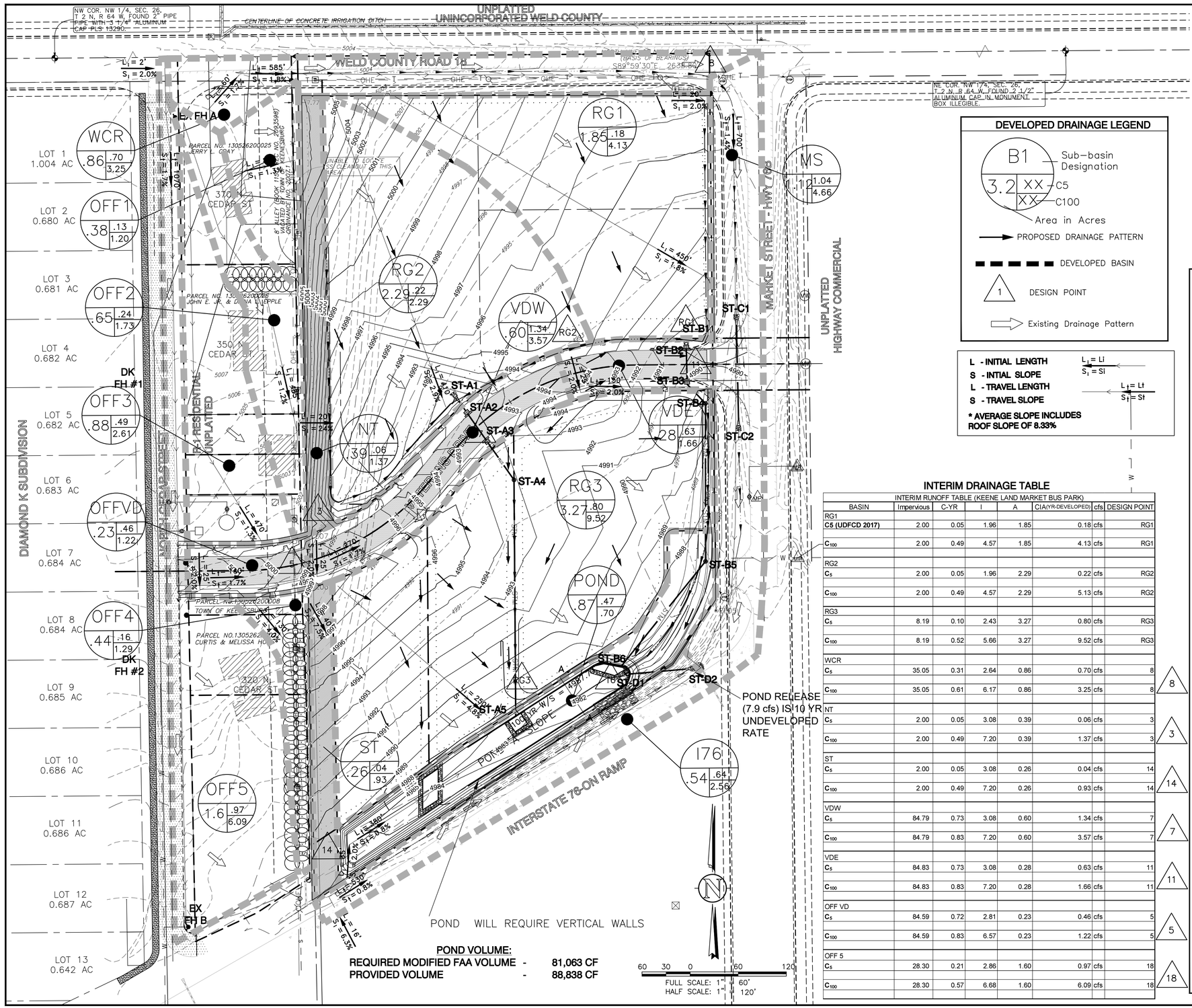

DEVELOPED DRAINAGE LEGEND

- B1 — Sub-basin Designation
- 3.2 — Area in Acres
- XX — C5
- XX — C100
- PROPOSED DRAINAGE PATTERN
- DEVELOPED BASIN
- 1 — DESIGN POINT
- Existing Drainage Pattern

L - INITIAL LENGTH
S - INTIAL SLOPE
L - TRAVEL LENGTH
S - TRAVEL SLOPE
* AVERAGE SLOPE INCLUDES ROOF SLOPE OF 8.33%

$L_i = Li$, $S_i = Si$; $L_t = Lt$, $S_t = St$

INTERIM DRAINAGE TABLE

INTERIM RUNOFF TABLE (KEENE LAND MARKET BUS PARK)

BASIN	Impervious	C-YR	I	A	CIA(YR-DEVELOPED)	cfs	DESIGN POINT	
RG1								
C5 (UDFCD 2017)	2.00	0.05	1.96	1.85	0.18	cfs	RG1	
C_{100}	2.00	0.49	4.57	1.85	4.13	cfs	RG1	
RG2								
C_5	2.00	0.05	1.96	2.29	0.22	cfs	RG2	
C_{100}	2.00	0.49	4.57	2.29	5.13	cfs	RG2	
RG3								
C_5	8.19	0.10	2.43	3.27	0.80	cfs	RG3	
C_{100}	8.19	0.52	5.66	3.27	9.52	cfs	RG3	
WCR								
C_5	35.05	0.31	2.64	0.86	0.70	cfs	8	
C_{100}	35.05	0.61	6.17	0.86	3.25	cfs	8	8
NT								
C_5	2.00	0.05	3.08	0.39	0.06	cfs	3	
C_{100}	2.00	0.49	7.20	0.39	1.37	cfs	3	3
ST								
C_5	2.00	0.05	3.08	0.26	0.04	cfs	14	
C_{100}	2.00	0.49	7.20	0.26	0.93	cfs	14	14
VDW								
C_5	84.79	0.73	3.08	0.60	1.34	cfs	7	
C_{100}	84.79	0.83	7.20	0.60	3.57	cfs	7	7
VDE								
C_5	84.83	0.73	3.08	0.28	0.63	cfs	11	
C_{100}	84.83	0.83	7.20	0.28	1.66	cfs	11	11
OFF VD								
C_5	84.59	0.72	2.81	0.23	0.46	cfs	5	
C_{100}	84.59	0.83	6.57	0.23	1.22	cfs	5	5
OFF 5								
C_5	28.30	0.21	2.86	1.60	0.97	cfs	18	
C_{100}	28.30	0.57	6.68	1.60	6.09	cfs	18	18

POND VOLUME:

REQUIRED MODIFIED FAA VOLUME	-	81,063 CF
PROVIDED VOLUME	-	88,838 CF

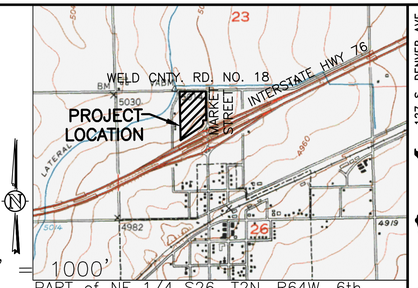

PART of NE 1/4 S26, T2N, R64W, 6th PM

SHOWN VICINITY MAP TAKEN FROM USGS QUAD – KEENESBURG 40104–A5

NOTES

THIS PLAN IS INTENDED AS THE INTERIM DRAINAGE PLAN FOR MARKET STREET BUSINESS PARK SUBDIVISION.

ALL IMPROVEMENTS ARE PROPOSED UNLESS NOTED AS EXISTING.

IT IS THE OWNER AND/OR THE CONTRACTOR'S RESPONSIBILITY TO ATTAIN ALL APPROPRIATE PERMITS AND REVIEW APPROVALS FROM THE STATE OF COLORADO AND CITY OF BRIGHTON RESPECTIVELY.

SEE "AS BUILT/BOUNDARY SURVEY" COMPLETED BY AMERICAN WEST LAND SURVEY – DATED MAY 24, 2006.

SEE COVER FOR PROJECT BENCHMARK AND BASIS OF BEARING.

SITE BENCHMARK WAS ESTABLISHED BEING A 3" BRASS CAP IN CONCRETE LYING FIVE FEET WEST OF A CONCRETE IRRIGATION DITCH NEAR THE INTERSECTION OF COUNTY ROAD 18 AND NORTH CEDAR STREET, AND THIRTY FEET NORTH OF THE CENTERLINE OF COUNTY ROAD 18. STAMPED "NATIONAL GEODETIC SURVEY ACD 1" HAVING AN ELEVATION OF 5008.06 FEET (NAVD 1988)

ANY REFERENCE TO EASEMENTS, SURVEY POINTS, OR EXISTING UTILITIES AND FEATURES ARE BASED SOLELY FROM SURVEY INFORMATION PROVIDED BY OTHERS – SPECIFICALLY PER SAME SURVEY NOTED ABOVE.

NOT ALL UNCC UTILITY LOCATES HAVE BEEN PERFORMED. IT IS THE CONTRACTOR'S RESPONSIBILITY TO VERIFY ALL UTILITIES ARE LOCATED AND SURVEY PROVIDED TO THE OWNER AND ENGINEER PRIOR TO CONSTRUCTION DRAWING RELEASE.

SIZES OF EXISTING UTILITIES AS TAKEN FROM 'CITY OF BRIGHTON WATER AND SEWER MAPS DATED JUNE 2004.

SYMBOL LEGEND

- 45 DEG BEND
- 22.5 DEG BEND
- RESTRAINED PLUG
- RESTRAINED TEE
- WATER METER
- RESTRAINED CROSS
- FIRE HYDRANT
- RESTRAINED WATER VALVE
- PIPE CROSSOVER
- MANHOLE
- PARKING STALL COUNT

LINETYPE LEGEND

- LOT / PROPERTY LINE
- RIGHT OF WAY LINE
- EASEMENT
- TO BE ABANDONED LOT LINE
- EXISTING BUILDING, CURB
- EDGE of ASPHALT
- CHAINLINK FENCE
- WIRE FENCE
- POND WQ W/S
- SWALE
- EXISTING OVERHEAD ELEC
- EXISTING ELECTICAL LINE
- EXISTING STORM LINE
- EXISTING SANITARY LINE
- EXISTING WATER LINE
- EXISTING GAS LINE
- EXISTING FIBER OPTIC LINE
- EXISTING TELEPHONE LINE
- PROPOSED SANITARY LINE
- PROPOSED SANITARY SERVICE
- PROPOSED STORM LINE
- PROPOSED WATER LINE
- PROPOSED WATER SERVICE
- PROPOSED GAS LINE
- PROPOSED ELECTRIC LINE
- PROPOSED TELEPHONE LINE

127 S. DENVER AVE
FT. LUPTON, CO 80621
www.westernec.com
email@westernec.com
(720) 685-9951
FAX (720) 294-1330
Western Engineering Consultants, inc LLC

No.	REVISION	DATE	BY
0	PRELIM/FINAL PLAT SUBMITTAL	08/06/19	CFC
1	UPDATED DRAINAGE–TOWN SUBMITTAL	08/16/19	CFC

KEENE LAND LLC
CONTACT: RICK ROBERTSON
8537 WCR 6
KEENESBURG, CO 80643
(303)961-0031

INTERIM DRAINAGE PLAN
MARKET STREET BUSINESS PARK SUBDIVISION
TOWN of KEENESBURG, WELD COUNTY, COLORADO

Dig Safely.
CALL UNCC
THREE WORKING DAYS BEFORE YOU DIG
811
www.uncc.org
UTILITY NOTIFICATION CENTER OF COLORADO

COLORADO REGISTERED PROFESSIONAL ENGINEER
CHRISTOPHER FOX CARNEY
FOR REVIEW ONLY
08/16/19
ONLY VALID FOR CONSTRUCTION IF SEAL & ORIGINAL SIGNATURE ARE ON EACH SHEET

INITIAL PLAN RELEASE: 08/06/19
DESIGNED BY: CFC
DRAWN BY: CFC
CHECKED BY: CFC
PROJECT NO. 01-0187.003.00
DOC CON # C4.01-INTDRNG
SHT C4.01

T:\0187_003_00-KEENE LAND-MARKET BUS PARK\Dwg\CDs\0187_003-WECI-CDS-4.00.dwg, C4.01-INT DRNG, 8/16/2019 3:43:03 PM, DWG To PDF.pc3, WEC 24'36, WEC 24'36

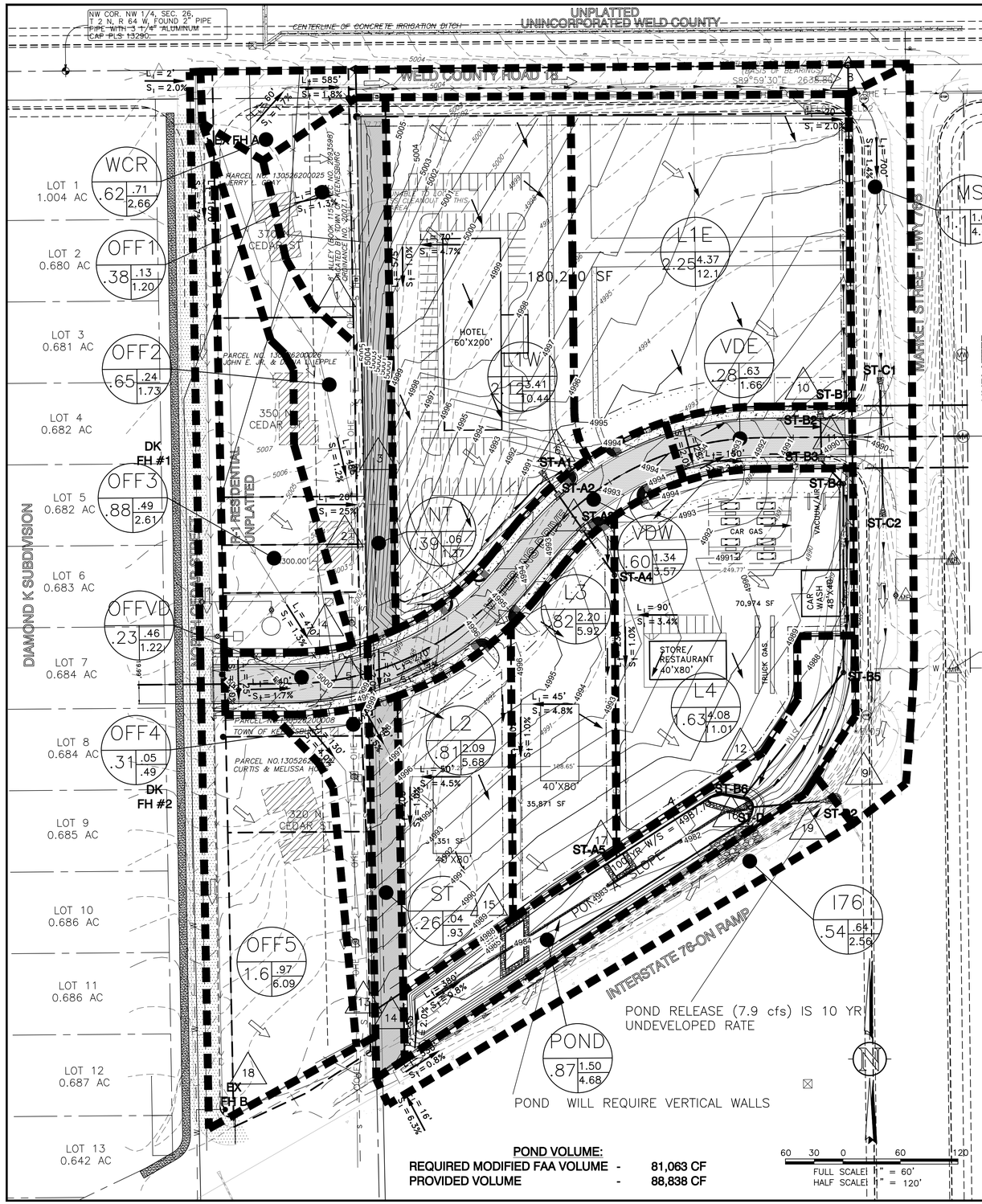

DEVELOPED DRAINAGE LEGEND

- B1 — Sub-basin Designation
- 3.2 — Area in Acres
- XX — C5
- XX — C100
- PROPOSED DRAINAGE PATTERN
- DEVELOPED BASIN
- 1 — DESIGN POINT
- Existing Drainage Pattern

L - INITIAL LENGTH
S - INTIAL SLOPE
L - TRAVEL LENGTH
S - TRAVEL SLOPE

$L_i = Li$, $S_i = Si$

$L_t = Lt$, $S_t = St$

* AVERAGE SLOPE INCLUDES ROOF SLOPE OF 8.33%

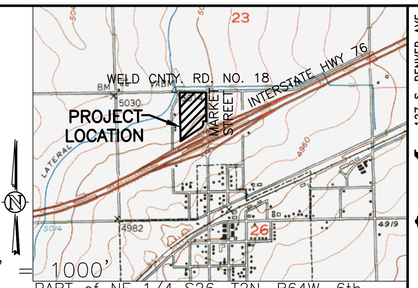

PART of NE 1/4 S26, T2N, R64W, 6th PM

SHOWN VICINITY MAP TAKEN FROM USGS QUAD – KEENESBURG 40104–A5

DEVELOPED DRAINAGE TABLE

DEVELOPED RUNOFF TABLE (KEENE LAND MARKET BUS PARK)

BASIN	Impervious	C-YR	I	A	C|A(YR-DEVELOPED)	cfs	DESIGN POINT	
L1E								
C5 (UDFCD 2017)	78.80	0.68	2.87	2.25	4.37	cfs	10	10
C_{100}	78.80	0.80	6.69	2.25	12.10	cfs	10	
L1W								
C5 (UDFCD 2017)	79.08	0.57	2.81	2.12	3.41	cfs	6	6
C_{100}	79.08	0.75	6.55	2.12	10.44	cfs	6	
L2								
C_5	81.44	0.70	3.68	0.81	2.09	cfs	15	15
C_{100}	81.44	0.81	8.59	0.81	5.68	cfs	15	
L3								
C_5	83.18	0.71	3.75	0.82	2.20	cfs	17	17
C_{100}	83.18	0.82	8.75	0.82	5.92	cfs	17	
L4								
C_5	82.56	0.71	3.53	1.63	4.08	cfs	12	12
C_{100}	82.56	0.82	8.25	1.63	11.01	cfs	12	
POND								
C_5	64.08	0.56	3.11	0.87	1.50	cfs	16	16
C_{100}	64.08	0.74	7.25	0.87	4.68	cfs	16	
NT								
C_5	2.00	0.05	3.08	0.39	0.06	cfs	3	3
C_{100}	2.00	0.49	7.20	0.39	1.37	cfs	3	
ST								
C_5	2.00	0.05	3.08	0.26	0.04	cfs	14	14
C_{100}	2.00	0.49	7.20	0.26	0.93	cfs	14	
VDW								
C_5	84.79	0.73	3.08	0.60	1.34	cfs	7	7
C_{100}	84.79	0.83	7.20	0.60	3.57	cfs	7	
VDE								
C_5	84.83	0.73	3.08	0.28	0.63	cfs	11	11
C_{100}	84.83	0.83	7.20	0.28	1.66	cfs	11	
OFF VD								
C_5	84.59	0.72	2.81	0.23	0.46	cfs	5	5
C_{100}	84.59	0.83	6.57	0.23	1.22	cfs	5	
OFF 5								
C_5	28.30	0.21	2.86	1.60	0.97	cfs	18	18
C_{100}	28.30	0.57	6.68	1.60	6.09	cfs	18	

NOTES

THIS PLAN IS INTENDED AS THE FINAL DRAINAGE PLAN FOR MARKET STREET BUSINESS PARK SUBDIVISION.

ALL IMPROVEMENTS ARE PROPOSED UNLESS NOTED AS EXISTING.

IT IS THE OWNER AND/OR THE CONTRACTOR'S RESPONSIBILITY TO ATTAIN ALL APPROPRIATE PERMITS AND REVIEW APPROVALS FROM THE STATE OF COLORADO AND CITY OF BRIGHTON RESPECTIVELY.

SEE "AS BUILT/BOUNDARY SURVEY" COMPLETED BY AMERICAN WEST LAND SURVEY – DATED MAY 24, 2006.

SEE COVER FOR PROJECT BENCHMARK AND BASIS OF BEARING.

SITE BENCHMARK WAS ESTABLISHED BEING A 3" BRASS CAP IN CONCRETE LYING FIVE FEET WEST OF A CONCRETE IRRIGATION DITCH NEAR THE INTERSECTION OF COUNTY ROAD 18 AND NORTH CEDAR STREET, AND THIRTY FEET NORTH OF THE CENTERLINE OF COUNTY ROAD 18. STAMPED "NATIONAL GEODETIC SURVEY ACD 1" HAVING AN ELEVATION OF 5008.06 FEET (NAVD 1988)

ANY REFERENCE TO EASEMENTS, SURVEY POINTS, OR EXISTING UTILITIES AND FEATURES ARE BASED SOLELY FROM SURVEY INFORMATION PROVIDED BY OTHERS – SPECIFICALLY PER SAME SURVEY NOTED ABOVE.

NOT ALL UNCC UTILITY LOCATES HAVE BEEN PERFORMED. IT IS THE CONTRACTOR'S RESPONSIBILITY TO VERIFY ALL UTILITIES ARE LOCATED AND SURVEY PROVIDED TO THE OWNER AND ENGINEER PRIOR TO CONSTRUCTION DRAWING RELEASE.

SIZES OF EXISTING UTILITIES AS TAKEN FROM 'CITY OF BRIGHTON WATER AND SEWER MAPS DATED JUNE 2004.

SYMBOL LEGEND

- 45 DEG BEND
- 22.5 DEG BEND
- RESTRAINED PLUG
- RESTRAINED TEE
- WATER METER
- RESTRAINED CROSS
- FIRE HYDRANT
- RESTRAINED WATER VALVE
- PIPE CROSSOVER
- MANHOLE
- PARKING STALL COUNT

LINETYPE LEGEND

- LOT / PROPERTY LINE
- RIGHT OF WAY LINE
- EASEMENT
- TO BE ABANDONED LOT LINE
- EXISTING BUILDING, CURB
- EDGE of ASPHALT
- CHAINLINK FENCE
- WIRE FENCE
- POND WQ W/S
- SWALE
- OHE — EXISTING OVERHEAD ELEC
- E — EXISTING ELECTICAL LINE
- ST — EXISTING STORM LINE
- S — EXISTING SANITARY LINE
- W — EXISTING WATER LINE
- G — EXISTING GAS LINE
- FIBER — EXISTING FIBER OPTIC LINE
- T — EXISTING TELEPHONE LINE
- SA — PROPOSED SANITARY LINE
- SS — PROPOSED SANITARY SERVICE
- STM — PROPOSED STORM LINE
- WA — PROPOSED WATER LINE
- WAS — PROPOSED WATER SERVICE
- GA — PROPOSED GAS LINE
- EL — PROPOSED ELECTRIC LINE
- PH — PROPOSED TELEPHONE LINE

127 S. DENVER AVE
FT. LUPTON, CO 80621
www.westernec.com
email: info@westernec.com
(720) 685-9951
FAX (720) 294-1330
Western Engineering Consultants, inc LLC

No.	REVISION	DATE	BY
0	PRELIM/FINAL PLAT SUBMITTAL	08/06/19	CFC
1	UPDATED DRAINAGE–TOWN SUBMITTAL	08/16/19	CFC

KEENE LAND LLC
CONTACT: RICK ROBERTSON
8530 W 56th
KEENESBURG, CO 80643
(303)961-0031

FINAL DRAINAGE PLAN
MARKET STREET BUSINESS PARK SUBDIVISION
TOWN of KEENESBURG, WELD COUNTY, COLORADO

Dig Safely.
CALL UNCC
THREE WORKING DAYS BEFORE YOU DIG
811
www.uncc.org
UTILITY NOTIFICATION CENTER OF COLORADO

COLORADO REGISTERED PROFESSIONAL ENGINEER CHRISTOPHER FOX CARNEY 33802 FOR REVIEW ONLY 08/16/19 ONLY VALID FOR CONSTRUCTION IF SEAL & ORIGINAL SIGNATURE ARE ON EACH SHEET

INITIAL PLAN RELEASE: 08/06/19
DESIGNED BY: CFC
DRAWN BY: CFC
CHECKED BY: CFC
PROJECT NO. 01-0187.003.00
DOC CON # C4.02-FNLDRNG
SHT C4.02

T:\0187_003_00-KEENE LAND-MARKET BUS PARK\Dwg\CDs\0187_003-WECI-CDS-4.00.dwg, C4.02-FINAL DRNG, 8/16/2019 3:43:12 PM , DWG To PDF.pc3, WEC 24"36, WEC 24"36

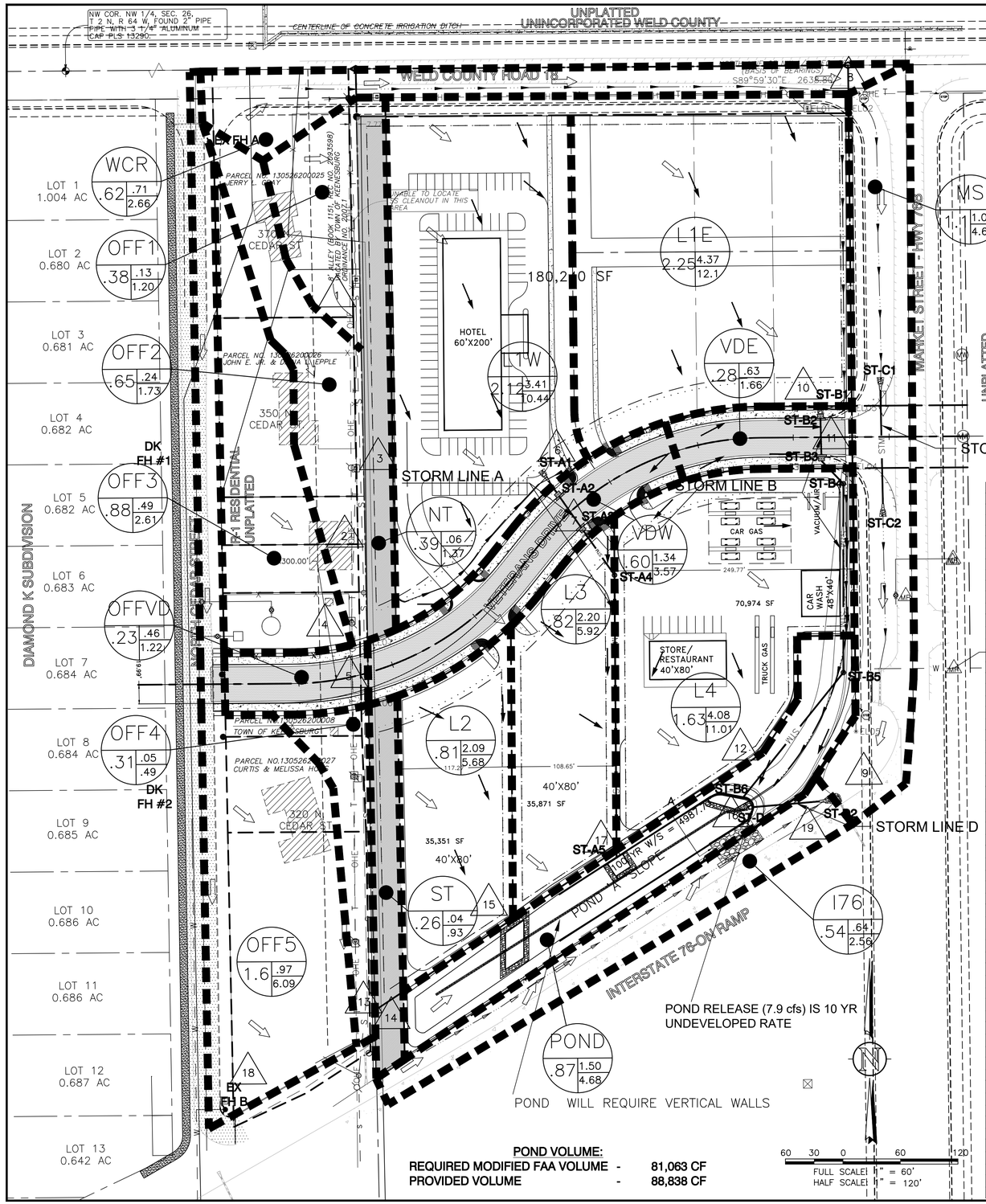

POND VOLUME:

REQUIRED MODIFIED FAA VOLUME	-	81,063 CF
PROVIDED VOLUME	-	88,838 CF

DEVELOPED DRAINAGE LEGEND

B1 — Sub-basin Designation
3.2 — Area in Acres
XX — C5
XX — C100
PROPOSED DRAINAGE PATTERN
DEVELOPED BASIN
1 — DESIGN POINT
Existing Drainage Pattern

L - INITIAL LENGTH
S - INTIAL SLOPE
L - TRAVEL LENGTH
S - TRAVEL SLOPE

$L_i = Li$, $S_i = Si$

$L_t = Lt$, $S_t = St$

* AVERAGE SLOPE INCLUDES ROOF SLOPE OF 8.33%

DEVELOPED DRAINAGE TABLE

DEVELOPED RUNOFF TABLE (KEENE LAND MARKET BUS PARK)

BASIN	Impervious	C-YR	I	A	C(A)(YR-DEVELOPED)	cfs	DESIGN POINT	
L1E								
C5 (UDFCD 2017)	78.80	0.68	2.87	2.25	4.37	cfs	10	10
C_{100}	78.80	0.80	6.69	2.25	12.10	cfs	10	
L1W								
C5 (UDFCD 2017)	79.08	0.57	2.81	2.12	3.41	cfs	6	6
C_{100}	79.08	0.75	6.55	2.12	10.44	cfs	6	
L2								
C_5	81.44	0.70	3.68	0.81	2.09	cfs	15	15
C_{100}	81.44	0.81	8.59	0.81	5.68	cfs	15	
L3								
C_5	83.18	0.71	3.75	0.82	2.20	cfs	17	17
C_{100}	83.18	0.82	8.75	0.82	5.92	cfs	17	
L4								
C_5	82.56	0.71	3.53	1.63	4.08	cfs	12	12
C_{100}	82.56	0.82	8.25	1.63	11.01	cfs	12	
POND								
C_5	64.08	0.56	3.11	0.87	1.50	cfs	16	16
C_{100}	64.08	0.74	7.25	0.87	4.68	cfs	16	
NT								
C_5	2.00	0.05	3.08	0.39	0.06	cfs	3	3
C_{100}	2.00	0.49	7.20	0.39	1.37	cfs	3	
ST								
C_5	2.00	0.05	3.08	0.26	0.04	cfs	14	14
C_{100}	2.00	0.49	7.20	0.26	0.93	cfs	14	
VDW								
C_5	84.79	0.73	3.08	0.60	1.34	cfs	7	7
C_{100}	84.79	0.83	7.20	0.60	3.57	cfs	7	
VDE								
C_5	84.83	0.73	3.08	0.28	0.63	cfs	11	11
C_{100}	84.83	0.83	7.20	0.28	1.66	cfs	11	
OFF VD								
C_5	84.59	0.72	2.81	0.23	0.46	cfs	5	5
C_{100}	84.59	0.83	6.57	0.23	1.22	cfs	5	
OFF 5								
C_5	28.30	0.21	2.86	1.60	0.97	cfs	18	18
C_{100}	28.30	0.57	6.68	1.60	6.09	cfs	18	

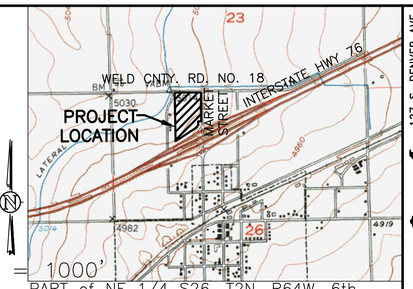

PART of NE 1/4 S26, T2N, R64W, 6th PM
SHOWN VICINITY MAP TAKEN FROM USGS QUAD – KEENESBURG 40104–A5

NOTES

THIS PLAN IS INTENDED AS THE FINAL DRAINAGE PLAN FOR MARKET STREET BUSINESS PARK SUBDIVISION.

ALL IMPROVEMENTS ARE PROPOSED UNLESS NOTED AS EXISTING.

IT IS THE OWNER AND/OR THE CONTRACTOR'S RESPONSIBILITY TO ATTAIN ALL APPROPRIATE PERMITS AND REVIEW APPROVALS FROM THE STATE OF COLORADO AND CITY OF BRIGHTON RESPECTIVELY.

SEE "AS BUILT/BOUNDARY SURVEY" COMPLETED BY AMERICAN WEST LAND SURVEY – DATED MAY 24, 2006.

SEE COVER FOR PROJECT BENCHMARK AND BASIS OF BEARING.

SITE BENCHMARK WAS ESTABLISHED BEING A 3" BRASS CAP IN CONCRETE LYING FIVE FEET WEST OF A CONCRETE IRRIGATION DITCH NEAR THE INTERSECTION OF COUNTY ROAD 18 AND NORTH CEDAR STREET, AND THIRTY FEET NORTH OF THE CENTERLINE OF COUNTY ROAD 18. STAMPED "NATIONAL GEODETIC SURVEY ACD 1" HAVING AN ELEVATION OF 5008.06 FEET (NAVD 1988)

ANY REFERENCE TO EASEMENTS, SURVEY POINTS, OR EXISTING UTILITIES AND FEATURES ARE BASED SOLELY FROM SURVEY INFORMATION PROVIDED BY OTHERS – SPECIFICALLY PER SAME SURVEY NOTED ABOVE.

NOT ALL UNCC UTILITY LOCATES HAVE BEEN PERFORMED. IT IS THE CONTRACTOR'S RESPONSIBILITY TO VERIFY ALL UTILITIES ARE LOCATED AND SURVEY PROVIDED TO THE OWNER AND ENGINEER PRIOR TO CONSTRUCTION DRAWING RELEASE.

SIZES OF EXISTING UTILITIES AS TAKEN FROM 'CITY OF BRIGHTON WATER AND SEWER MAPS DATED JUNE 2004.

SYMBOL LEGEND

45 DEG BEND
22.5 DEG BEND
RESTRAINED PLUG
RESTRAINED TEE
WATER METER
RESTRAINED CROSS
FIRE HYDRANT
RESTRAINED WATER VALVE
PIPE CROSSOVER
MANHOLE
PARKING STALL COUNT

LINETYPE LEGEND

LOT / PROPERTY LINE
RIGHT OF WAY LINE
EASEMENT
TO BE ABANDONED LOT LINE
EXISTING BUILDING, CURB
EDGE of ASPHALT
CHAINLINK FENCE
WIRE FENCE
POND WQ W/S
SWALE
EXISTING OVERHEAD ELEC
EXISTING ELECTICAL LINE
EXISTING STORM LINE
EXISTING SANITARY LINE
EXISTING WATER LINE
EXISTING GAS LINE
EXISTING FIBER OPTIC LINE
EXISTING TELEPHONE LINE

PROPOSED SANITARY LINE
PROPOSED SANITARY SERVICE
PROPOSED STORM LINE
PROPOSED WATER LINE
PROPOSED WATER SERVICE
PROPOSED GAS LINE
PROPOSED ELECTRIC LINE
PROPOSED TELEPHONE LINE

127 S. DENVER AVE
FT. LUPTON, CO 80621
www.westernec.com
email@westernec.com
(720) 685-9951
FAX (720) 294-1330
Western Engineering Consultants, inc LLC

No.	REVISION	DATE	BY
1	UPDATED DRAINAGE–TOWN SUBMITTAL	08/16/19	CFC

KEENE LAND LLC
CONTACT: RICK ROBERTSON
8537 WCR 26
KEENESBURG, CO 80643
(303)961-0031

STORM SYSTEM PLAN
MARKET STREET BUSINESS PARK SUBDIVISION
TOWN of KEENESBURG, WELD COUNTY, COLORADO

Dig Safely.
CALL UNCC
THREE WORKING DAYS BEFORE YOU DIG
811
www.uncc.org
UTILITY NOTIFICATION CENTER OF COLORADO

COLORADO REGISTERED PROFESSIONAL ENGINEER
CHRISTIN F. COX
FOR 33802
REVIEW ONLY
08/16/19
ONLY VALID FOR CONSTRUCTION IF SEAL & ORIGINAL SIGNATURE ARE ON EACH SHEET

INITIAL PLAN RELEASE: 08/16/19
DESIGNED BY: CFC
DRAWN BY: CFC
CHECKED BY: CFC
PROJECT NO. 01-0187.003.00
DOC CON # C4.02A-STMDES
SHT C4.02A

T:\0187_003_00-KEENE LAND-MARKET BUS PARK\Dwg\Cds\0187_003-WEC-CDS-4.00.dwg, C4.02A-STM SYSTEM, 8/16/2019 3:43:22 PM, _DWG To PDF.pc3, WEC 24'36, WEC 24'36

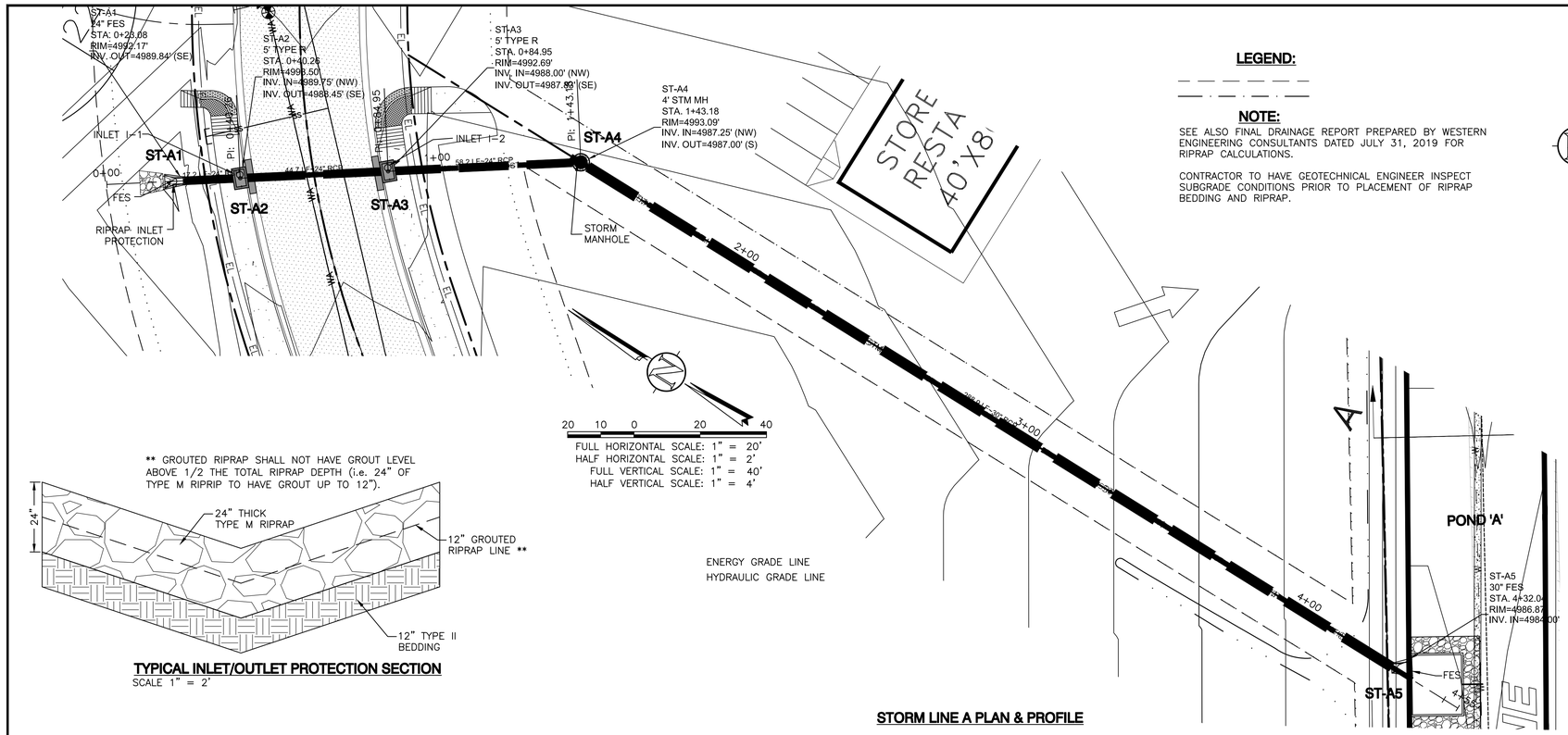

STORM LINE A PLAN & PROFILE

LEGEND:

NOTE:

SEE ALSO FINAL DRAINAGE REPORT PREPARED BY WESTERN ENGINEERING CONSULTANTS DATED JULY 31, 2019 FOR RIPRAP CALCULATIONS.

CONTRACTOR TO HAVE GEOTECHNICAL ENGINEER INSPECT SUBGRADE CONDITIONS PRIOR TO PLACEMENT OF RIPRAP BEDDING AND RIPRAP.

FULL HORIZONTAL SCALE: 1" = 30'
HALF HORIZONTAL SCALE: 1" = 3'
FULL VERTICAL SCALE: 1" = 60'
HALF VERTICAL SCALE: 1" = 6'

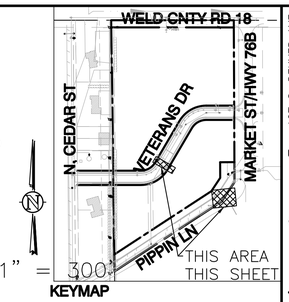

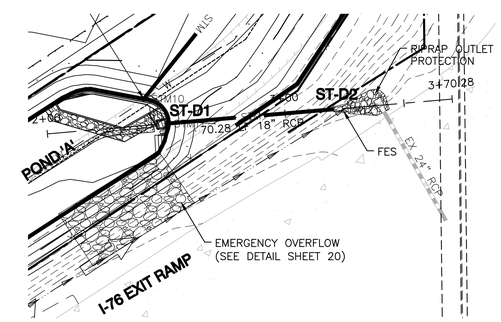

STORM LINE D PLAN & PROFILE

** GROUTED RIPRAP SHALL NOT HAVE GROUT LEVEL ABOVE 1/2 THE TOTAL RIPRAP DEPTH (i.e. 24" OF TYPE M RIPRIP TO HAVE GROUT UP TO 12").

TYPICAL INLET/OUTLET PROTECTION SECTION
SCALE 1" = 2'

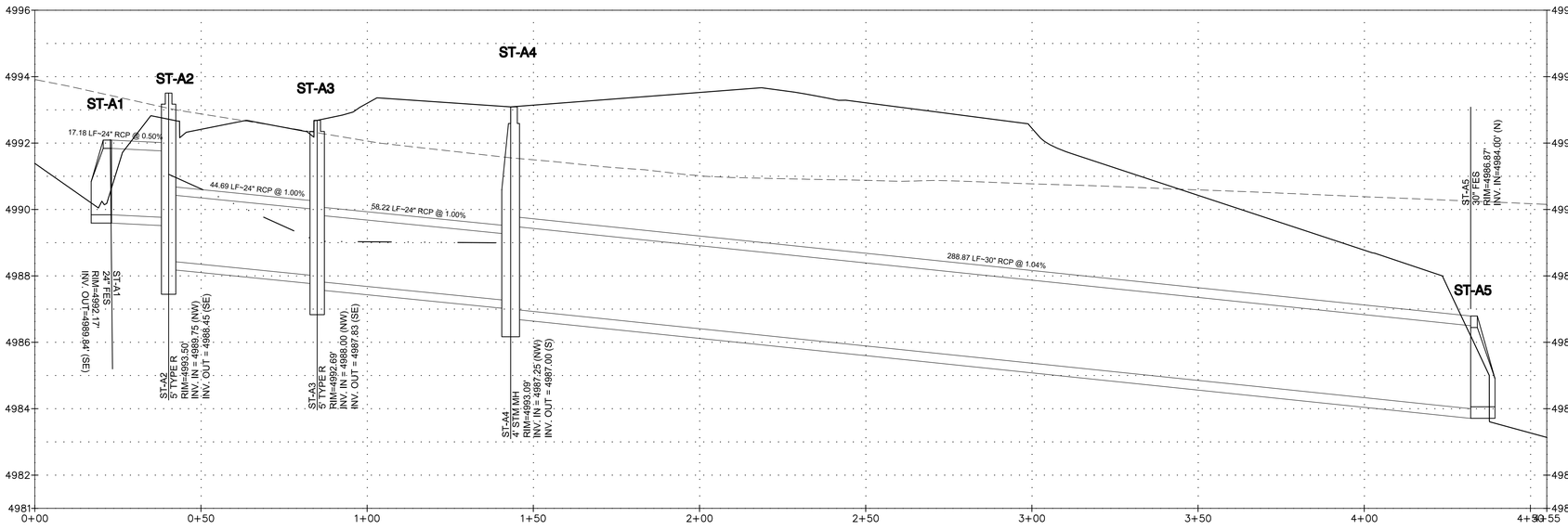

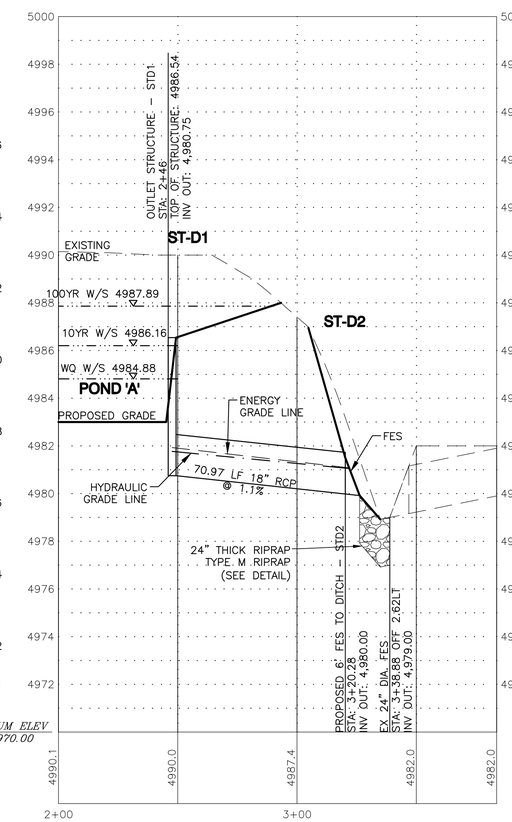

127 S. DENVER AVE
FT. LUPTON, CO 80621
www.westernec.com
email@westernec.com
(720) 685-9951
FAX (720) 294-1330
Western Engineering Consultants, inc LLC

No.	REVISION	DATE	BY
0	PRELIM/FINAL PLAT SUBMITTAL	09/06/18	CFC
1	UPDATED DRAINAGE-TOWN SUBMITTAL	08/16/19	CFC

KEENE LAND LLC
CONTACT: RICK ROBERTSON
8537 WCR 5
KEENESBURG, CO 80643
(303)961-0031

STORM SEWER PLAN & PROFILE
MARKET STREET BUSINESS PARK SUBDIVISION
TOWN of KEENESBURG, WELD COUNTY, COLORADO

Dig Safely.
CALL UNCC
THREE WORKING DAYS BEFORE YOU DIG
811
www.uncc.org
UTILITY NOTIFICATION CENTER OF COLORADO

COLORADO REGISTERED PROFESSIONAL ENGINEER
CHRISTIN F. COX
FOR REVIEW ONLY
08/16/19
33802
ONLY VALID FOR CONSTRUCTION IF SEAL & ORIGINAL SIGNATURE APPEAR ON EACH SHEET

INITIAL PLAN RELEASE: 08/06/19
DESIGNED BY: CFC
DRAWN BY: CFC
CHECKED BY: CFC
PROJECT NO. 01-0187.003.00
DOC CON # C4.03-STMP&P
SHT C4.03

T:\0187_003_00-KEENE LAND-MARKET BUS PARK\Dwg\CDs\0187_003-WEC\-CDS-4.00.dwg, C4.03-STM P&P, 8/16/2019 3:43:36 PM, DWG To PDF.pc3, WEC 24"36, WEC 24"36

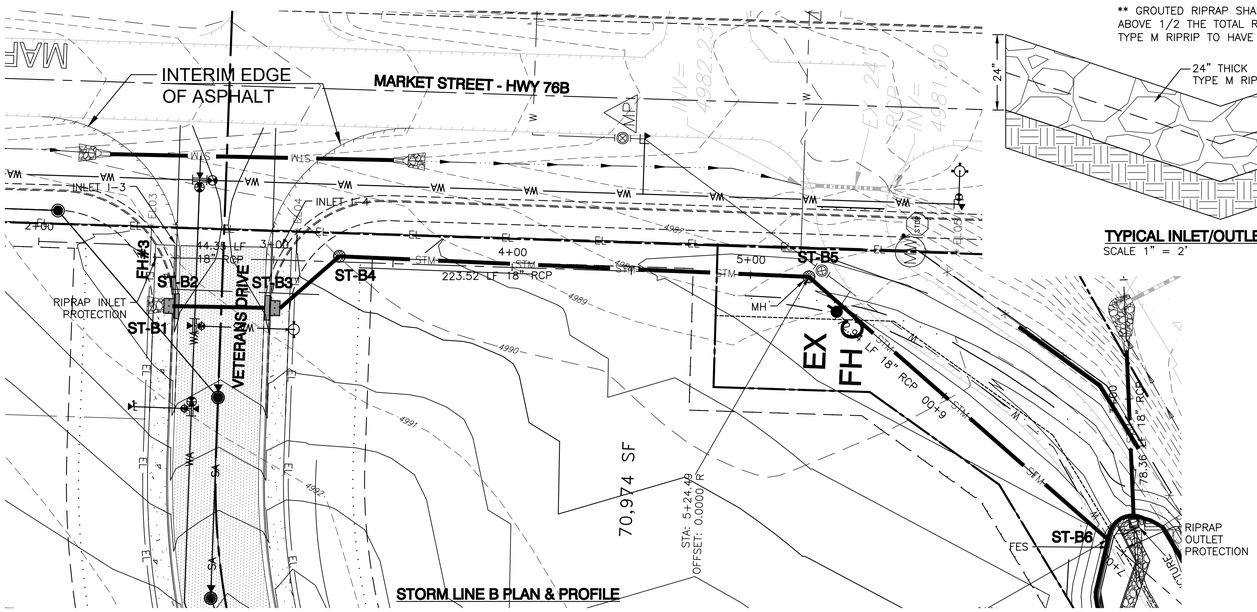

STORM LINE B PLAN & PROFILE

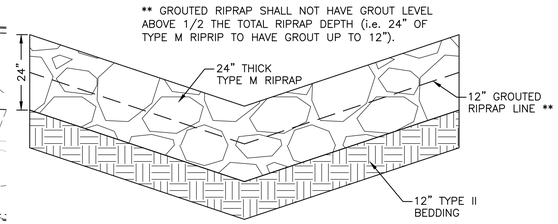

TYPICAL INLET/OUTLET PROTECTION SECTION
SCALE 1" = 2'

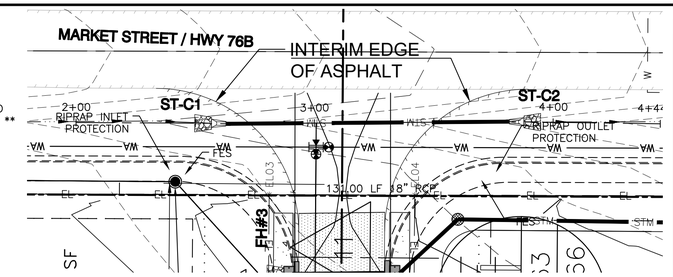

STORM LINE C PLAN & PROFILE

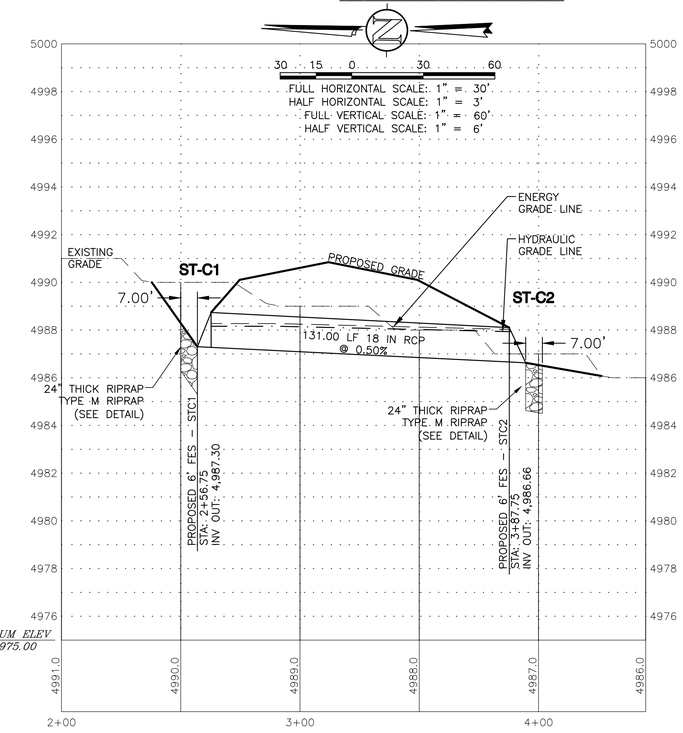

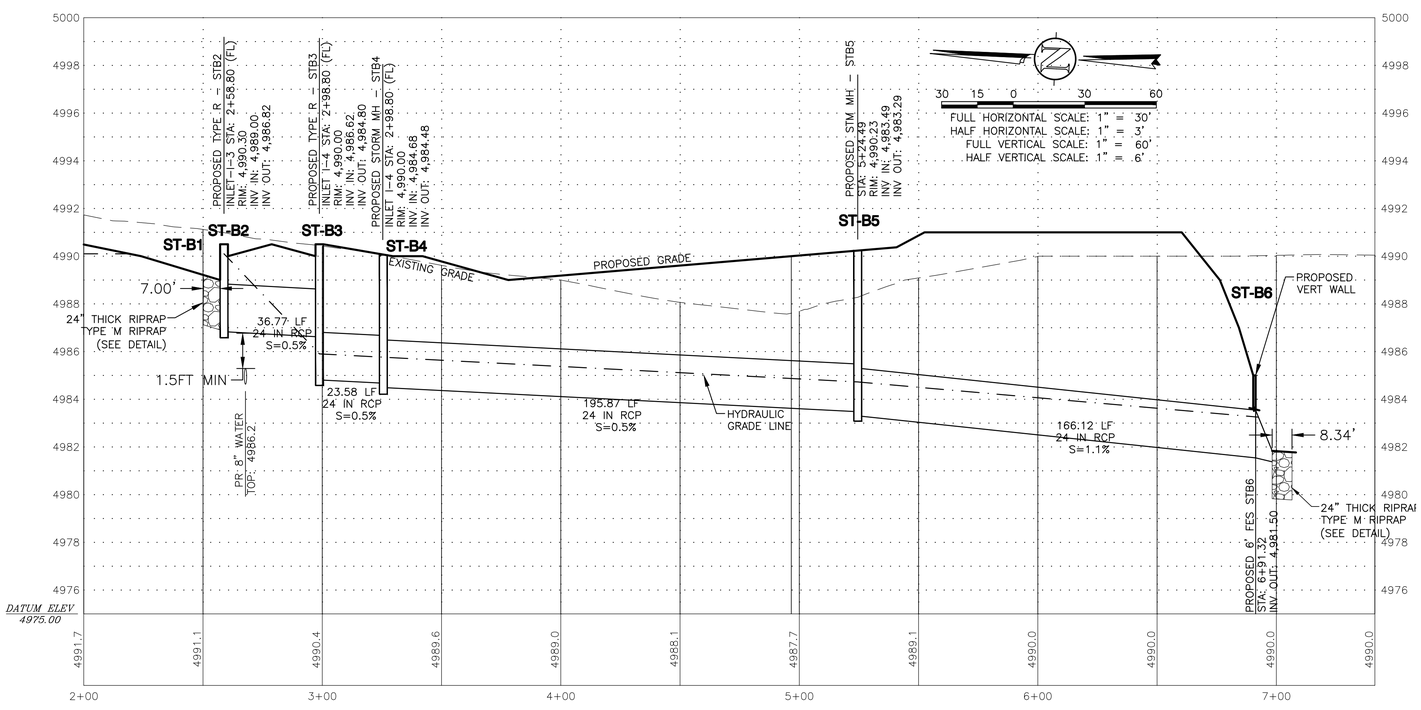

LEGEND:

ENERGY GRADE LINE

HYDRAULIC GRADE LINE

NOTE:

SEE ALSO FINAL DRAINAGE REPORT PREPARED BY WESTERN ENGINEERING CONSULTANTS DATED JULY 31, 2019 FOR RIPRAP CALCULATIONS.

CONTRACTOR TO HAVE GEOTECHNICAL ENGINEER INSPECT SUBGRADE CONDITIONS PRIOR TO PLACEMENT OF RIPRAP BEDDING AND RIPRAP.

KEYMAP

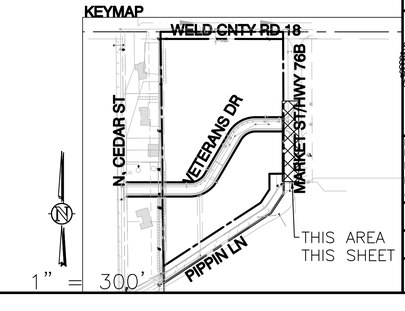

127 S. DENVER AVE
FT. LUPTON, CO 80621
www.westernec.com
email@westernec.com
(720) 685-9951
FAX (720) 294-1330
Western Engineering Consultants, inc LLC

No.	REVISION	DATE	BY
0	PRELIM/FINAL PLAT SUBMITTAL	09/06/19	CFC
1	UPDATED DRAINAGE-TOWN SUBMITTAL	09/16/19	CFC

KEENE LAND LLC
CONTACT: RICK ROBERTSON
8511 WCR 5
KEENESBURG, CO 80643
(303)961-0031

STORM SEWER PLAN & PROFILE
MARKET STREET BUSINESS PARK SUBDIVISION
TOWN of KEENESBURG, WELD COUNTY, COLORADO

Dig Safely.
CALL UNCC
THREE WORKING DAYS BEFORE YOU DIG
811
www.uncc.org
UTILITY NOTIFICATION CENTER OF COLORADO

COLORADO REGISTERED PROFESSIONAL ENGINEER CHARLIN F. FOX FOR 33802 REVIEW ONLY 08/16/19
ONLY VALID FOR CONSTRUCTION IF SEAL & ORIGINAL SIGNATURE APPEARS HERE

INITIAL PLAN RELEASE: 08/06/19
DESIGNED BY: CFC
DRAWN BY: CFC
CHECKED BY: CFC
PROJECT NO. 01-0187.003.00
DOC CON # C4.04-STMP&P
SHT C4.04

T:\0187_003_00-KEENE LAND-MARKET BUS PARK\Dwg\Cbd\0187_003-WECI-CDS-4.00.dwg, C4.04-STM P&P, 8/16/2019 3:43:51 PM, _DWG To PDF.pc3, WEC 24'36, WEC 24'36

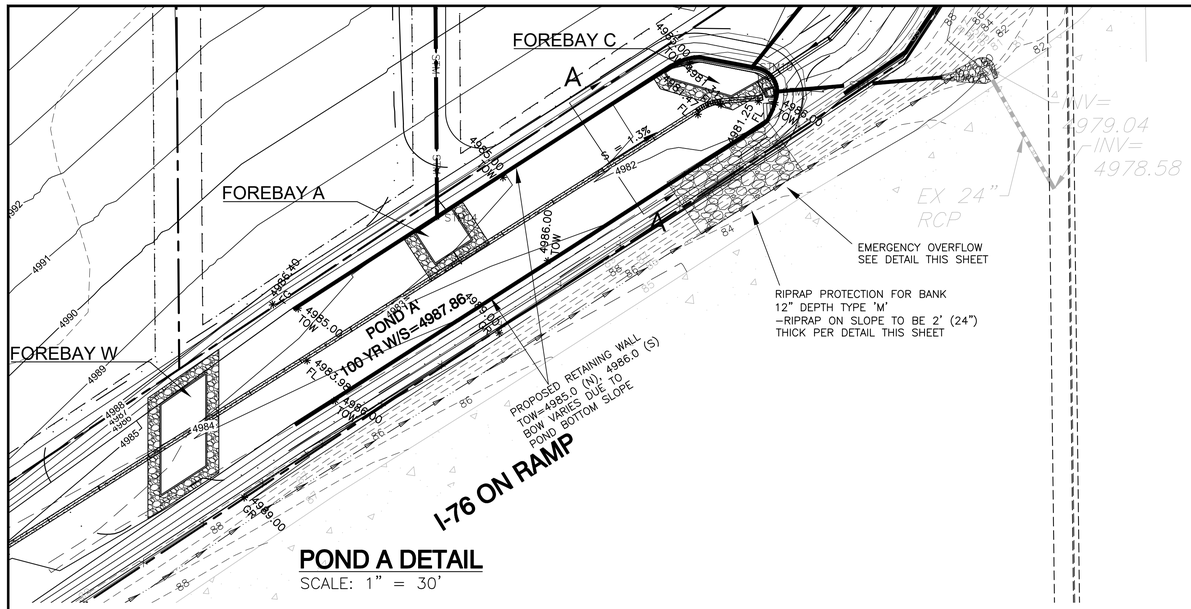

POND A DETAIL

SCALE: 1" = 30'

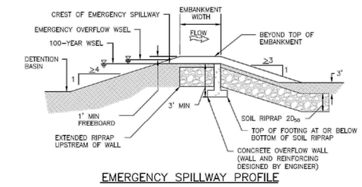

EMERGENCY SPILLWAY PROFILE

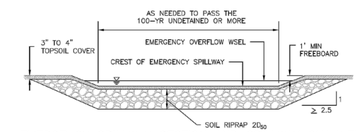

EMERGENCY SPILLWAY SECTION AND SPILLWAY CHANNEL

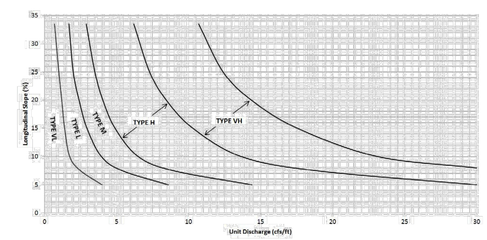

Figure 12-21. Embankment protection details and rock sizing chart (adapted from Arapahoe County)

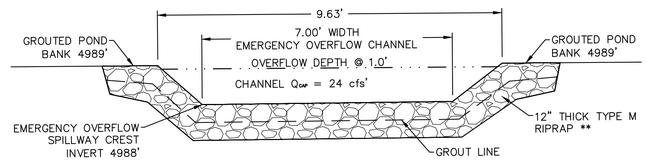

** GROUTED RIPRAP SHALL NOT HAVE GROUT LEVEL ABOVE 1/2 THE TOTAL RIPRAP DEPTH (i.e. 12" OF TYPE M RIPRIP TO HAVE GROUT UP TO 6").

EMERGENCY OVERFLOW DETAIL

SCALE 1" = 2.0' VIEW IS NORTH

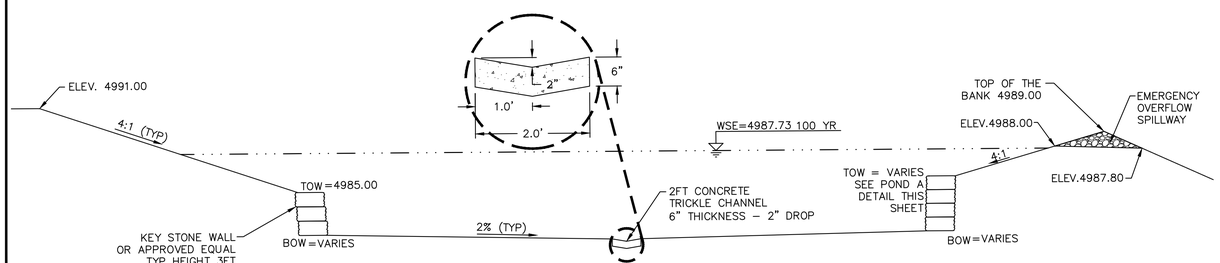

DETENTION POND CROSS-SECTION A-A

SCALE: 1"=5.0'

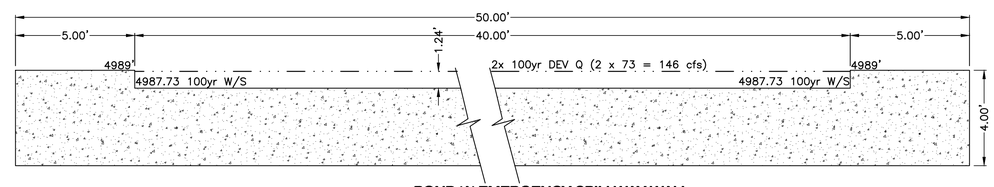

POND 'A' EMERGENCY SPILLWAY WALL

SCALE 1" = 3'

127 S. DENVER AVE
FT. LUPTON, CO 80621
www.westernec.com
email@westernec.com
(720) 685-9951
FAX (720) 294-1330
Western Engineering Consultants, inc LLC

No.	REVISION	DATE	BY
1	UPDATED DRAINAGE-TOWN SUBMITTAL	08/16/19	CFC

KEENE LAND LLC
CONTACT: RICK ROBERTSON
8537 WCR 5
KEENESBURG, CO 80643
(303)961-0031

DRAINAGE DETAILS
MARKET STREET BUSINESS PARK SUBDIVISION
TOWN of KEENESBURG, WELD COUNTY, COLORADO

Dig Safely.
CALL UNCC
THREE WORKING DAYS BEFORE YOU DIG
811
www.uncc.org
UTILITY NOTIFICATION CENTER OF COLORADO

COLORADO REGISTERED PROFESSIONAL ENGINEER
CHRISTIN P. FOX
FOR
33802
REVIEW ONLY
08/16/19
ONLY VALID FOR CONSTRUCTION IF SEAL & ORIGINAL SIGNATURE ARE ON EACH SHEET

INITIAL PLAN RELEASE:08/16/19
DESIGNED BY: CFC
DRAWN BY: CFC
CHECKED BY: CFC
PROJECT NO. 01-0187.003.00
DOC CON # C4.05-DRNGDTL
SHT C4.05

T:\0187_003_00\KEENE LAND\MARKET BUS PARK\Dwg\CDs\0187_003-WEC\-CDS-4.00.dwg, C4.05-DRNGDTLS, 8/16/2019 3:44:04 PM, _DWG To PDF.pc3, WEC 24"36, WEC 24"36

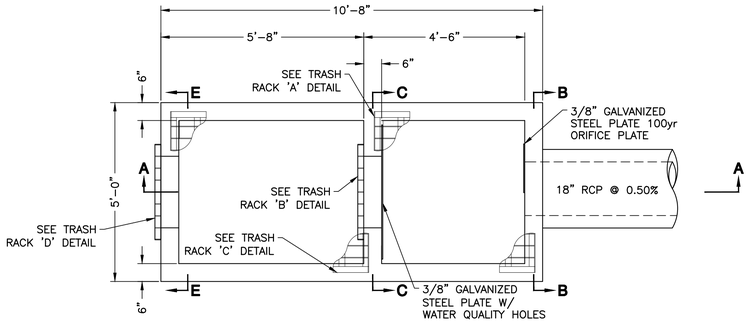

PLAN VIEW
SCALE 1" = 2'

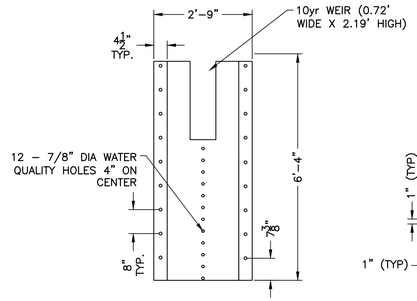

3/8" GALVANIZED STEEL PLATE W/ WATER QUALITY HOLES
SCALE 1" = 2'

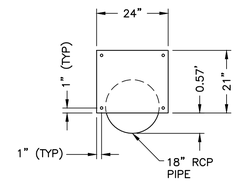

3/8" GALVANIZED STEEL PLATE 100yr ORIFICE PLATE
SCALE 1" = 2'

STRUCTURAL NOTES:

1. ALL CONCRETE SHALL BE C.D.O.T. CLASS B CAST IN PLACE.
2. ALL EXPOSED CONCRETE CORNERS SHALL BE CHAMFER 3/4".
3. ALL REINFORCING BARS SHALL HAVE A MINIMUM 2" CLEARANCE.
4. ALL REINFORCING BARS SHALL BE EPOXY COATED.
5. ALL STEPS SHALL BE IN ACCORDANCE WITH AASHTO M199.

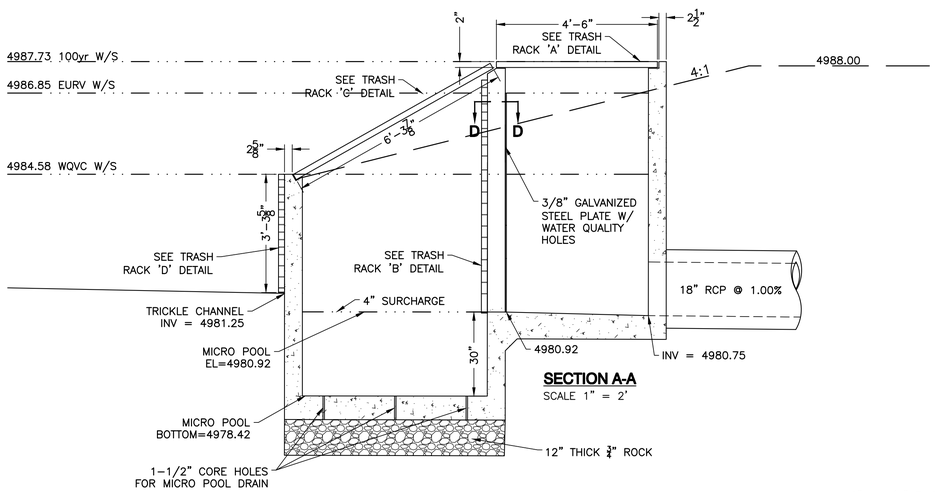

SECTION A-A
SCALE 1" = 2'

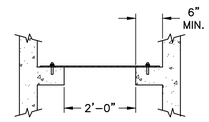

SECTION D-D
SCALE 1" = 2'

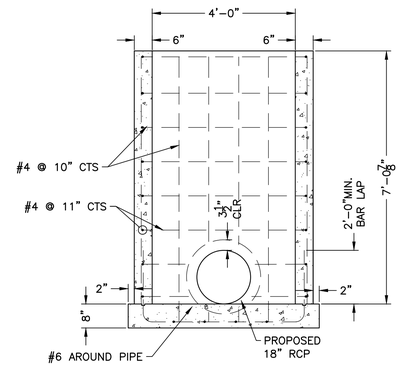

SECTION B-B
SCALE 1" = 2'

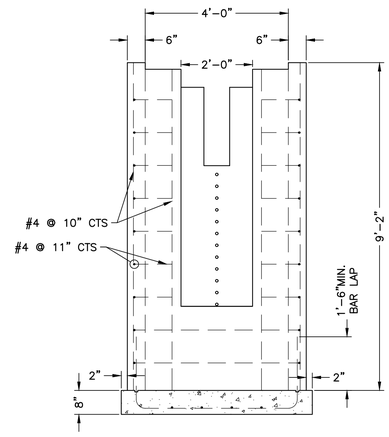

SECTION C-C
SCALE 1" = 2'

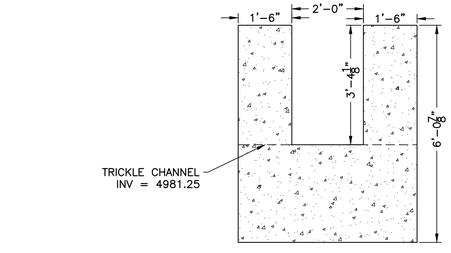

SECTION E-E
SCALE 1" = 2'

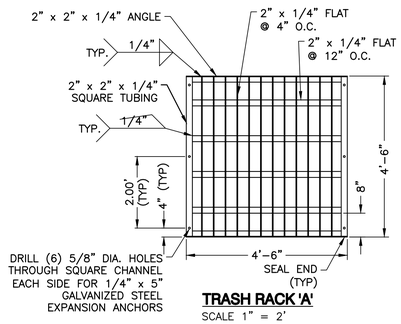

TRASH RACK 'A'
SCALE 1" = 2'

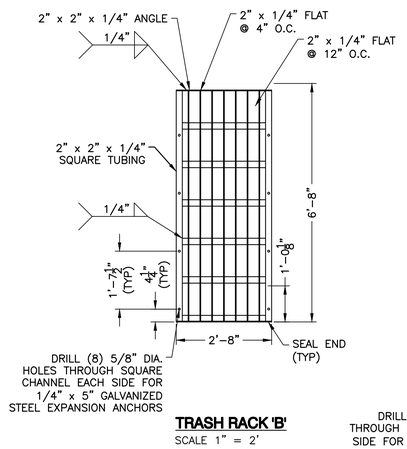

TRASH RACK 'B'
SCALE 1" = 2'

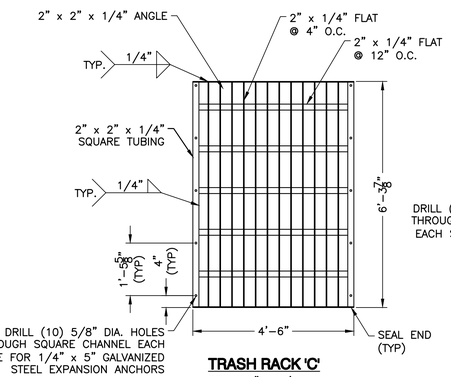

TRASH RACK 'C'
SCALE 1" = 2'

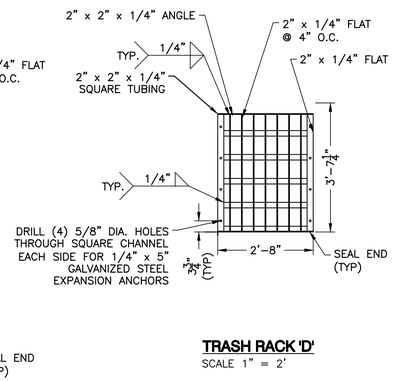

TRASH RACK 'D'
SCALE 1" = 2'

127 S. DENVER AVE
FT. LUPTON, CO 80621
www.westernec.com
email@westernec.com
(720) 685-9951
FAX (720) 294-1330
Western Engineering Consultants, inc LLC

No.	REVISION	DATE	BY
1	UPDATED DRAINAGE-TOWN SUBMITTAL	08/16/19	CFC

KEENE LAND LLC
CONTACT: RICK ROBERTSON
8537 WCR 5
KEENESBURG, CO 80643
(303)961-0031

OUTLET STRUCTURE DETAILS
MARKET STREET BUSINESS PARK SUBDIVISION
TOWN of KEENESBURG, WELD COUNTY, COLORADO

Dig Safely.
CALL UNCC
THREE WORKING DAYS BEFORE YOU DIG
811
www.uncc.org
UTILITY NOTIFICATION CENTER OF COLORADO

COLORADO REGISTERED PROFESSIONAL ENGINEER
CHRISTOPHER FOSTER CARR
FOR
33802
REVIEW ONLY
08/16/19
ONLY VALID FOR CONSTRUCTION IF SEAL & ORIGINAL SIGNATURE ARE ON EACH SHEET

INITIAL PLAN RELEASE: 08/16/19
DESIGNED BY: CFC
DRAWN BY: CFC
CHECKED BY: CFC
PROJECT NO. 01-0187.003.00
DOC CON # C4.06-OUTDTL
SHT C4.06

T:\0187_003_00-KEENE LAND-MARKET BUS PARK\Dwg\CDs\0187_003-WECI-CDS-4.00.dwg, C4.06-OUTLETDTLS, 8/16/2019 3:44:12 PM , DWG To PDF.pc3, WEC 24*36, WEC 24*36

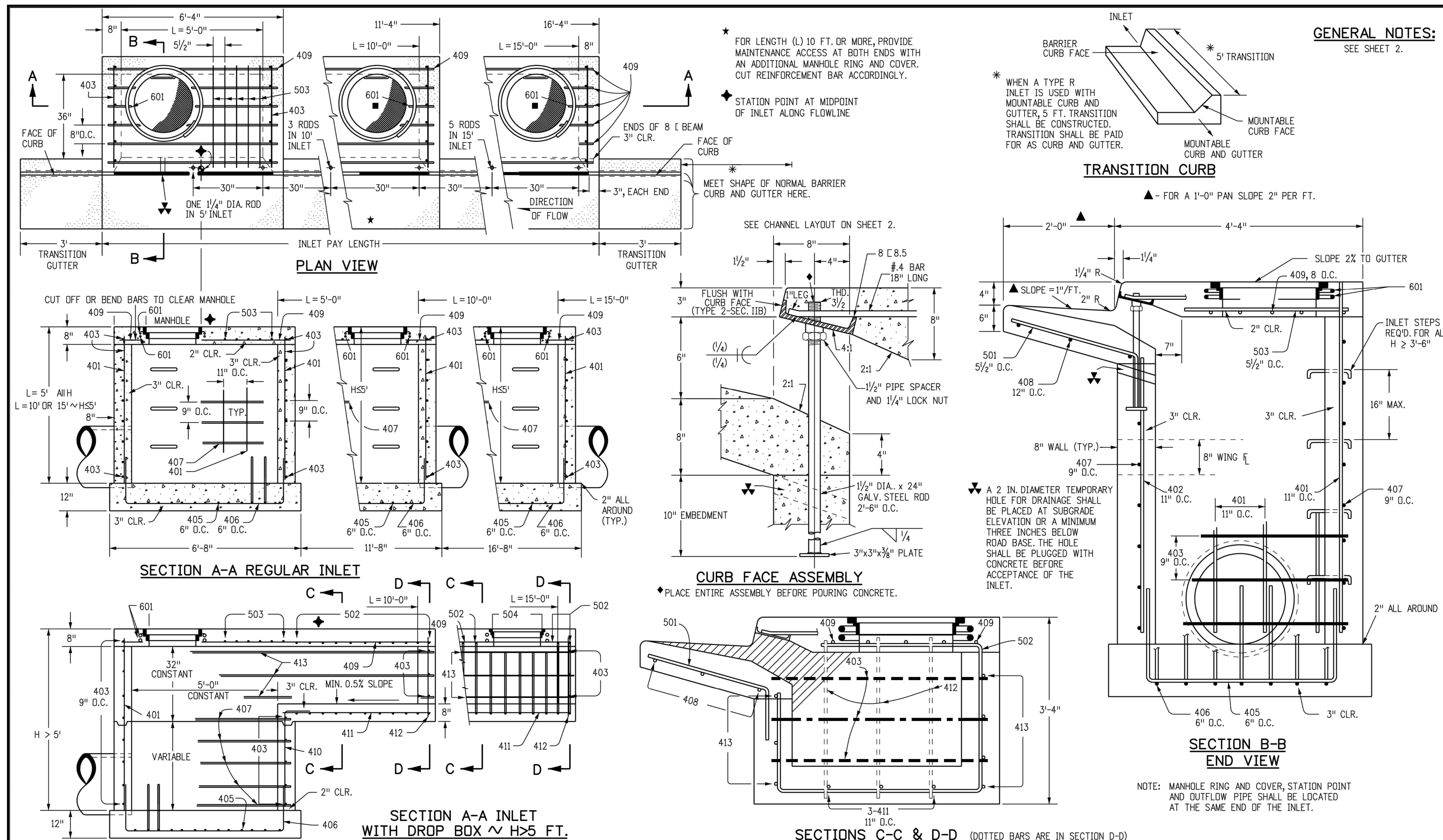

Computer File Information		Sheet Revisions	
Creation Date: 07/04/12	Initials: DD	Date:	Comments
Last Modification Date: 07/04/12	Initials: LTA		
Full Path: www.coloradodot.info/business/designsupport			
Drawing File Name: 6040120102.dgn			
CAD Ver.: MicroStation V8	Scale: Not to Scale Units: English		

Colorado Department of Transportation
4201 East Arkansas Avenue
Denver, Colorado 80222
Phone: (303) 757-9083
Fax: (303) 757-9820
Project Development Branch DD/LTA

CURB INLET TYPE R

Issued By: Project Development Branch July 4, 2012

STANDARD PLAN NO.
M-604-12
Sheet No. 1 of 2

MARK	BAR # OR SIZE	O.C. SPACING	TYPE	ALL INLETS L = 5 FT. NO. REQ'D.	ALL INLETS L = 5 FT. LENGTH	INLETS: H ≤ 5 FT. L = 10 FT. NO. REQ'D.	INLETS: H ≤ 5 FT. L = 10 FT. LENGTH	INLETS: H ≤ 5 FT. L = 15 FT. NO. REQ'D.	INLETS: H ≤ 5 FT. L = 15 FT. LENGTH	INLETS: H > 5 FT. L = 10 FT. NO. REQ'D.	INLETS: H > 5 FT. L = 10 FT. LENGTH	INLETS: H > 5 FT. L = 15 FT. NO. REQ'D.	INLETS: H > 5 FT. L = 15 FT. LENGTH
401	4	11"	II	15	*	21	*	26	*	11	*	11	*
402	4	11"	II	7	*	13	*	18	*	7	*	7	*
403	4	9"	II	*	4'-0"	*	4'-0"	*	4'-0"	*	4'-0"	*	4'-0"
405	4	6"	VI	11	6'-10"	21	6'-10"	31	6'-10"	11	6'-10"	11	6'-10"
406	4	6"	VIII	7	8'-10"	7	13'-10"	7	18'-10"	7	8'-10"	7	8'-10"
407	4	9"	II	*	5'-10"	*	10'-10"	*	15'-10"	*	5'-10"	*	5'-10"
408	4	12"	II	3	6'-10"	3	11'-10"	3	16'-0"	3	11'-10"	3	16'-0"
409	4	8"	II	6	5'-10"	6	10'-10"	6	15'-10"	6	10'-10"	6	15'-10"
410	4	11"	VII							3		3	*
411	4	11"	II							3	5'-2"	3	10-2"
412	4	11"	II							3	2'-9"	3	2'-9"
413	4	9"	II							7	10'-10"	7	15'-10"
501	5	5½"	IV	11	3'-4"	22	3'-4"	33	3'-4"	22	3'-4"	33	3'-4"
502	5	5½"	III							11	11'-5"	17	11'-5"
503	5	5½"	II	5	3'-6"	16	3'-6"	27	3'-6"	6	3'-6"	6	3'-6"
504	5	5½"	IX									5	8'-4"
601	6	2½"	V	2	8'-10"	2	8'-10"	2	8'-10"	2	8'-10"	4	8'-10"
■8[8.5				1	5'-10"	1	10'-10"	1	15'-10"	1	10'-10"	1	15'-10"
				2 BARS, 1 RODS	——	4 BARS, 3 RODS	——	8 BARS, 5 RODS	——	4 BARS, 3 RODS	——	8 BARS, 5 RODS	——

* VARIABLE REFER TO TABLE TWO.
■ INCLUDE #4, 18 IN. BARS (SEE CHANNEL LAYOUT).

REGULAR INLETS (L = 10 FT. and L = 15 FT. under INLETS: H ≤ 5 FT.) — DROP BOX INLETS (under INLETS: H > 5 FT.)

TABLE ONE ~ BAR LIST FOR CURB INLETS, TYPE "R"

"H"	LENGTH 401	LENGTH 402	LENGTH 410	NO. REQ'D. REGULAR 403	NO. REQ'D. REGULAR 407	NO. REQ'D. DROP BOX 403	NO. REQ'D. DROP BOX 407	L = 5 FT. CONC. CU. YDS.	L = 5 FT. STEEL LBS.	L = 10 FT. CONC. CU. YDS.	L = 10 FT. STEEL LBS.	L = 15 FT. CONC. CU. YDS.	L = 15 FT. STEEL LBS.
3'-0"	2'-8"	1'-8"		10	7			3.2	285	5.3	497	7.4	706
3'-6"	3'-2"	2'-2"		10	7			3.4	305	5.7	528	7.9	747
4'-0"	3'-8"	2'-8"		12	9			3.7	326	6.0	559	8.4	786
4'-6"	4'-2"	3'-2"		12	9			3.9	334	6.4	571	8.8	803
5'-0"	4'-8"	3'-8"		14	11			4.1	354	6.7	602	9.3	844
5'-6"	5'-2"	4'-2"	3'-5"	16	13	15	6	4.4	375	6.0	607	7.4	850
6'-0"	5'-8"	4'-8"	3'-11"	16	13	16	6	4.6	382	6.2	616	7.6	860
6'-6"	6'-2"	5'-2"	4'-5"	18	15	18	8	4.8	402	6.4	637	7.8	880
7'-0"	6'-8"	5'-8"	4'-11"	20	17	19	10	5.0	423	6.6	654	8.0	897
7'-6"	7'-2"	6-2"	5'-5"	20	17	20	10	5.3	430	6.9	664	8.3	907
8'-0"	7'-8"	6'-8"	5'-11"	22	19	22	12	5.5	451	7.1	684	8.5	927
8'-6"	8'-2"	7'-2"	6'-5"	24	21	23	14	5.7	471	7.3	702	8.7	944
9'-0"	8'-8"	7'-8"	6'-11"	24	21	24	14	6.0	479	7.6	711	9.0	954
9'-6"	9'-2"	8'-2"	7'-5"	26	23	26	16	6.2	499	7.8	732	9.2	974
10'-0"	9'-8"	8'-8"	7'-11"	28	25	27	18	6.4	520	8.0	749	9.4	992
10'-6"	10'-2"	9'-2"	8'-5"	28	25	28	18	6.7	527	8.3	759	9.7	1001
11'-0"	10'-8"	9'-8"	8'-11"	30	27	30	20	6.9	547	8.5	779	9.9	1022

NOTES: FOR L = 5 FT., L = 10 FT., AND L = 15 FT.
REGULAR INLETS: TOTAL QUANTITIES NEEDED ARE OUTSIDE THE HEAVY BLACK LINE.
DROP BOX INLETS: TOTAL QUANTITIES NEEDED ARE INSIDE THE HEAVY BLACK LINE.
STEEL WEIGHTS DO NOT INCLUDE STRUCTURAL STEEL CHANNEL.

TABLE TWO ~ BARS AND QUANTITIES VARIABLE WITH "H"

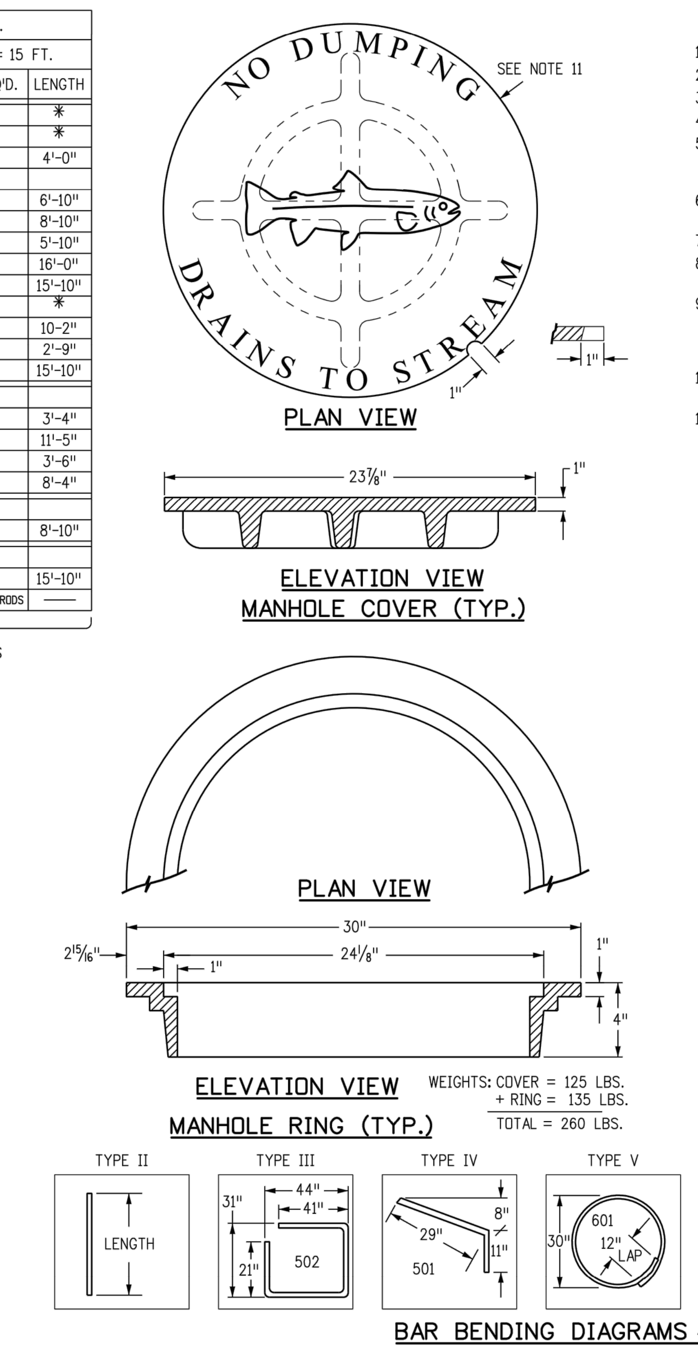

GENERAL NOTES

1. CONCRETE SHALL BE CLASS B. INLET MAY BE CAST-IN-PLACE OR PRECAST.
2. CONCRETE WALLS SHALL BE FORMED ON BOTH SIDES AND SHALL BE 8 IN. THICK.
3. INLET STEPS SHALL BE IN CONFORMANCE WITH AASHTO M 199.
4. CURB FACE ASSEMBLY SHALL BE GALVANIZED AFTER WELDING.
5. EXPOSED CONCRETE CORNERS SHALL BE CHAMFERED ¾ IN. CURB AND GUTTER CORNERS SHALL BE FINISHED TO MATCH THE EXISTING CURB AND GUTTER BEYOND THE TRANSITION GUTTER.
6. REINFORCING BARS SHALL BE DEFORMED AND SHALL HAVE A 2 IN. MINIMUM CLEARANCE. ALL REINFORCING BARS SHALL BE EPOXY COATED.
7. DIMENSIONS AND WEIGHTS OF TYPICAL MANHOLE RING AND COVER ARE NOMINAL.
8. MATERIAL FOR MANHOLE RINGS AND COVERS SHALL BE GRAY OR DUCTILE CAST IRON IN ACCORDANCE WITH SUBSECTION 712.06.
9. SINCE PIPE ENTRIES INTO THE INLET ARE VARIABLE, THE DIMENSIONS SHOWN ARE TYPICAL. ACTUAL DIMENSIONS AND QUANTITIES FOR CONCRETE AND REINFORCEMENT SHALL BE AS REQUIRED IN THE WORK. QUANTITIES INCLUDE VOLUMES OCCUPIED BY PIPES.
10. STRUCTURAL STEEL SHALL BE GALVANIZED AND SHALL BE IN ACCORDANCE WITH SUBSECTION 712.06.
11. ALL MANHOLE COVERS SHALL BE CAST WITH A "NO DUMPING DRAINS TO STREAM" MESSAGE AND A FISH SYMBOL. THE SURFACE OF THE MANHOLE COVER SHALL HAVE A NON-SLIP PATTERN.

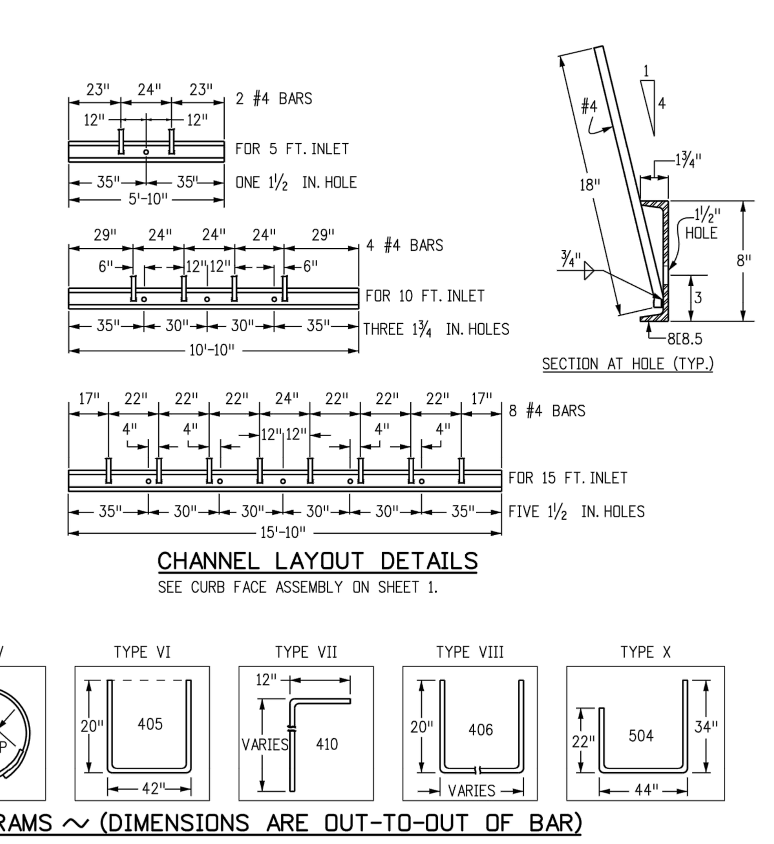

Computer File Information		Sheet Revisions	
Creation Date: 07/04/12	Initials: DD	Date:	Comments
Last Modification Date: 07/04/12	Initials: LTA		
Full Path: www.coloradodot.info/business/designsupport			
Drawing File Name: 6040120202.dgn			
CAD Ver.: MicroStation V8	Scale: Not to Scale Units: English		

Colorado Department of Transportation
4201 East Arkansas Avenue
Denver, Colorado 80222
Phone: (303) 757-9083
Fax: (303) 757-9820
Project Development Branch DD/LTA

CURB INLET TYPE R

Issued By: Project Development Branch July 4, 2012

STANDARD PLAN NO.
M-604-12
Sheet No. 2 of 2

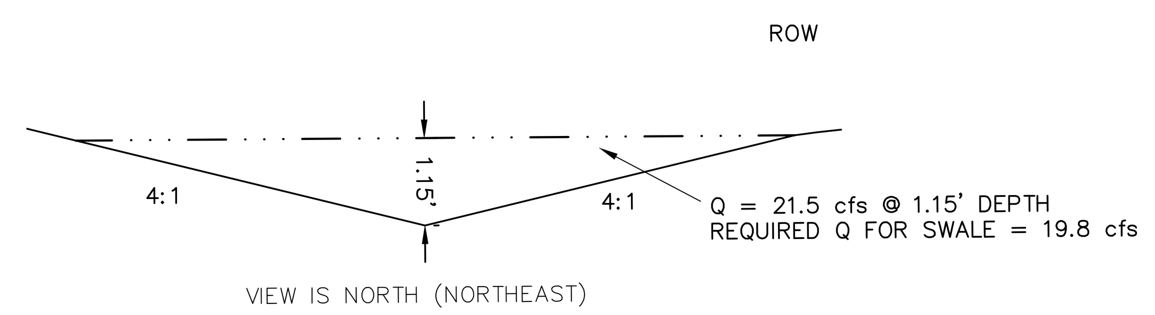

TEMPORARY SWALE DETAIL

LOCATED ALONG NORTH SIDE OF VETERAN'S DRIVE
STA: 102+00 TO 105+00

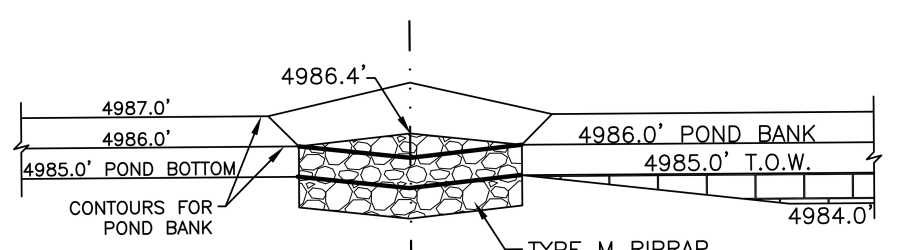

SWALE RUNDOWN TO POND

(SWALE FROM BASIN G3)
SCALE 1" = 5'

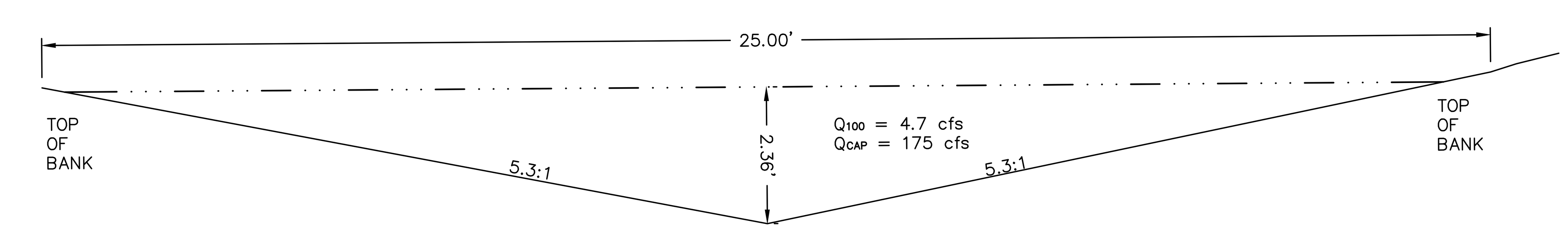

MARKET STREET DITCH SECTION

VIEW IS NORTH WEST SIDE OF DITCH
SCALE 1" = 2'

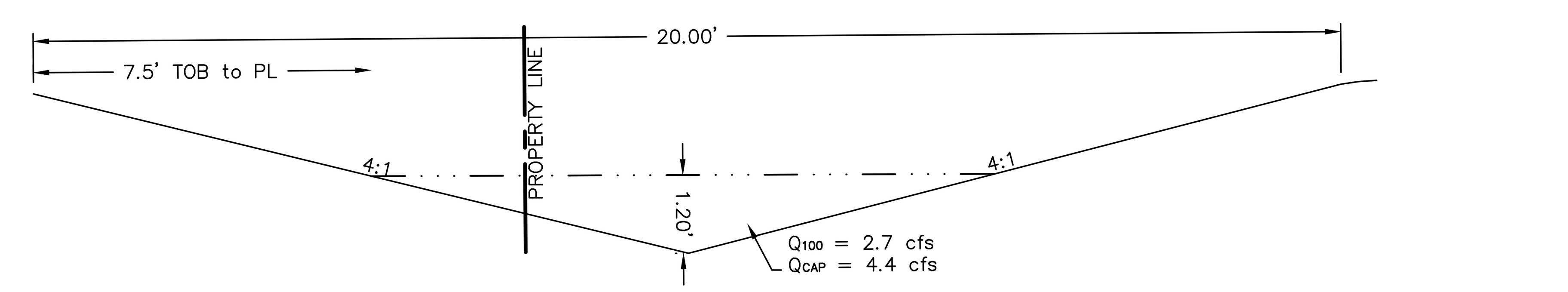

WCR 18 DITCH SECTION

VIEW IS WEST – SOUTH SIDE OF WCR 18
*SHOWN TO ILLUSTRATE LACK OF FLOODING INFLUENCE FROM WCR 18
SCALE 1" = 2'

BEDDING GRADATION

UDFCD Table MD-11		
	Percent Weight by Passing Square-Mesh Sieves	
U.S. Standard Sieve Size	Type I CDOT Sect. 703.01	Type II CDOT Sect. 703.09 Class A
3 inches	-----	90-100
1 1/2 inches	-----	-----
3/4 inches	-----	20-90
3/8 inches	100	-----
#4	95-100	0-20
#16	45-80	-----
#50	10-30	-----
#100	2-10	-----
#200	0-2	0-3

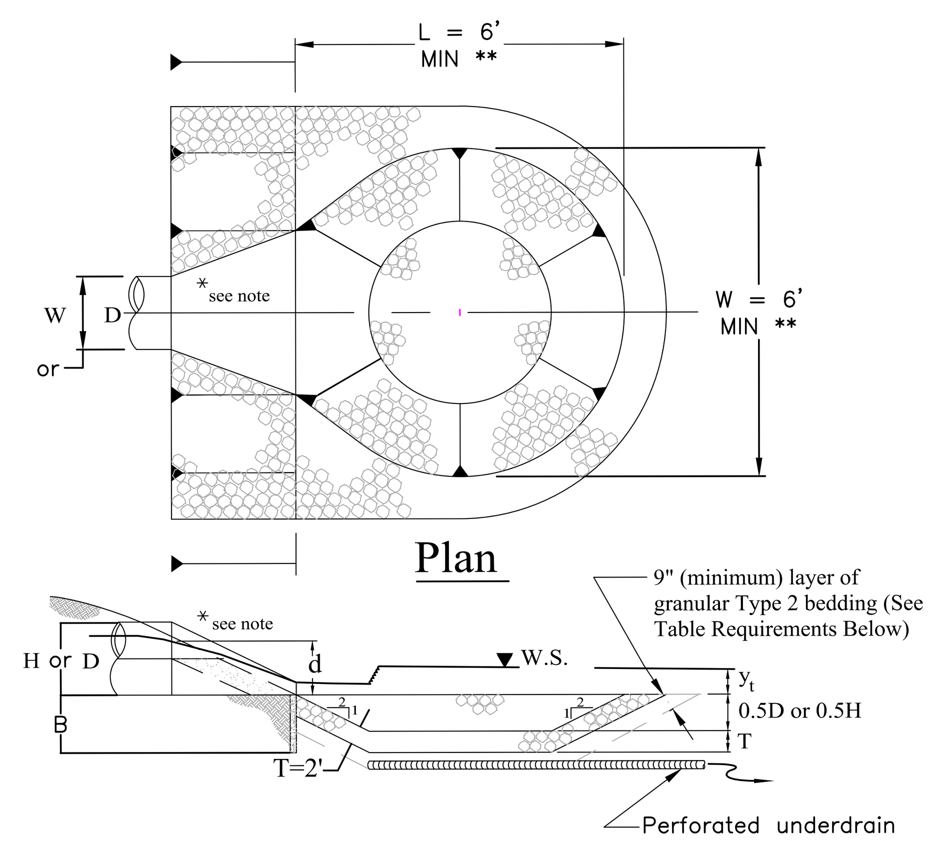

∗ Note: For rectangular conduits use a standard design for a headwall with wingwalls, paved bottom between the wingwalls, with an end cutoff wall extending to a minimum depth equal to B
** INSTALL LENGTHS SHOWN IN PROFILES

Figure 1: Low tailwater basin at pipe outlets

SEE DRAINAGE REPORT APPENDIX D FOR RIPRAP CALCULATIONS.

RIPRAP BEDDING REQUIREMENTS

UDFCD Table MD-12 (Volume 1)			
	Minimum Bedding Thickness (inches)		
	Fine-Grained Soils*		Coarse-Grained soils**
Riprap Designation	Type I	Type II	Type II
VL (d_{50} =6 in), L (d_{50}=9 in)	4	4	6
M (d_{50} =12 in)	4	4	6
H (d_{50} =18 in)	4	6	8
VH (d_{50} =24 in)	4	6	8

* May substitute one 12-inch layer of type II bedding. The substitution of one layer of type II bedding shall not be permitted at drop structures. The use of a combination of filter fabric and Type II bedding at drop structures is acceptable.
**Fifty percent or more by weight retained on the #40 sieve.

Classification & Gradation of Ordinary Riprap UDFCD Table MD-7

Riprap Designation	% Smaller Than Given Size by Weight	Intermediate Rock Dimensions (inches)	d50 (inches)*
Type VL	70–100 50–70 35–50 2–10	12 9 6 2	6**
Type L	70–100 50–70 35–50 2–10	15 12 9 3	9**
Type M	70–100 50–70 35–50 2–10	21 18 12 4	12**
Type H	70–100 50–70 35–50 2–10	30 24 18 6	18
Type VH	70–100 50–70 35–50 2–10	42 33 24 9	24

* d50 = MEAN PARTICLE SIZE (INTERMEDIATE DIMENSION) BY WEIGHT

** MIX VL & L RIPRAP WITH 30% (BY VOLUME) TOPSOIL AND BURY IT WITH 6+ INCHES OF TOPSOIL, ALL VIBRATION COMPACTED, AND REVEGETATE.

SOIL RIPRAP

70%-75% RIPRAP
25%-30% SOIL

127 S. DENVER AVE
FT. LUPTON, CO 80621
www.westerneci.com
email@westerneci.com
(720) 685-9951
FAX (720) 294-1330
Western Engineering Consultants, inc LLC

No.	REVISION	DATE	BY
0	PRELIM/FINAL PLAT SUBMITTAL	08/06/19	CFC
1	UPDATED DRAINAGE-TOWN SUBMITTAL	08/16/19	CFC

KEENE LAND, LLC, CONTACT: RICK ROBERTSON
8537 WCR 51
KEENESBURG, CO 80643
(303)961-0031

DRAINAGE DETAILS
MARKET STREET BUSINESS PARK SUBDIVISION
TOWN of KEENESBURG, WELD COUNTY, COLORADO

Dig Safely.
CALL UNCC
THREE WORKING DAYS BEFORE YOU DIG
811
www.uncc.org
UTILITY NOTIFICATION CENTER OF COLORADO

COLORADO REGISTERED PROFESSIONAL ENGINEER
FOR 33802
REVIEW ONLY
08/16/19
ONLY VALID FOR CONSTRUCTION IF SEAL & ORIGINAL SIGNATURE ARE ON EACH SHEET

INITIAL PLAN RELEASE: 08/06/19
DESIGNED BY: CFC
DRAWN BY: CFC
CHECKED BY: CFC
PROJECT NO. 01-0187.003.00
DOC CON # C4.07-DRNGDTL
SHT C4.07

T:\0187_003_00-KEENE LAND-MARKET BUS PARK\Dwg\CDs\0187_003-WECI-CDS-4.00.dwg, C4.07-DRNGDTLS, 8/16/2019 3:44:21 PM, _DWG To PDF.pc3, WEC 24"36, WEC 24"36

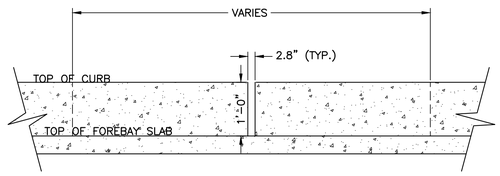

2.45" WEIR FOR RELEASE FROM FOREBAY PER UDFCD EQN. SO-13 SEE DRAINAGE REPORT APPENDIX FOR CALCULATIONS

TYPICAL FOREBAY WEIR

SCALE 1" = 2'

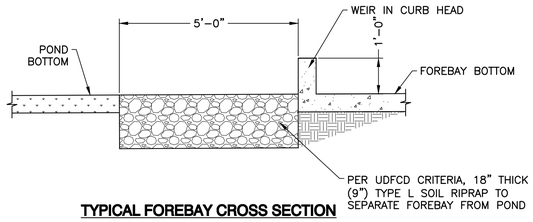

TYPICAL FOREBAY CROSS SECTION

SCALE 1" = 2'

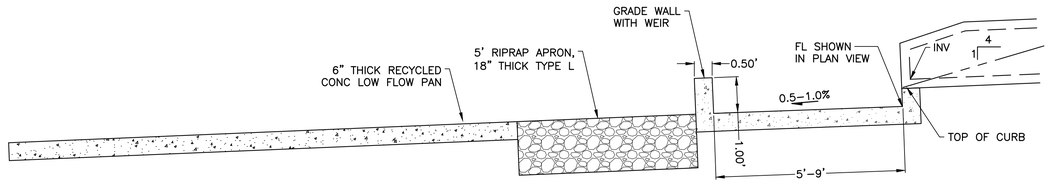

TYPICAL FOREBAY SECTION

SCALE 1" = 2'

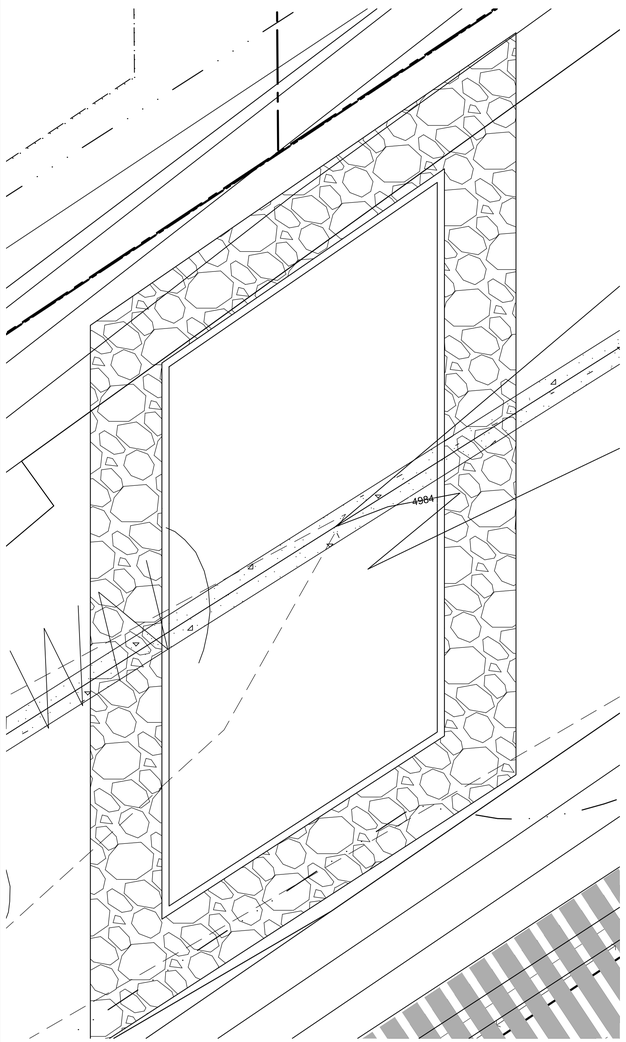

FOREBAY WEST DETAIL

SCALE: 1" = 5'

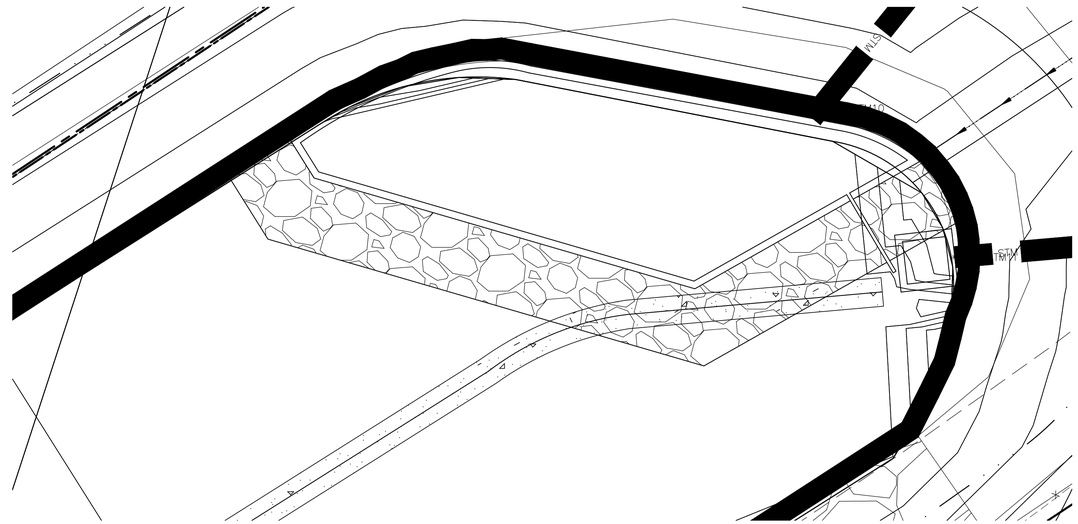

FOREBAY C DETAIL

SCALE: 1" = 5'

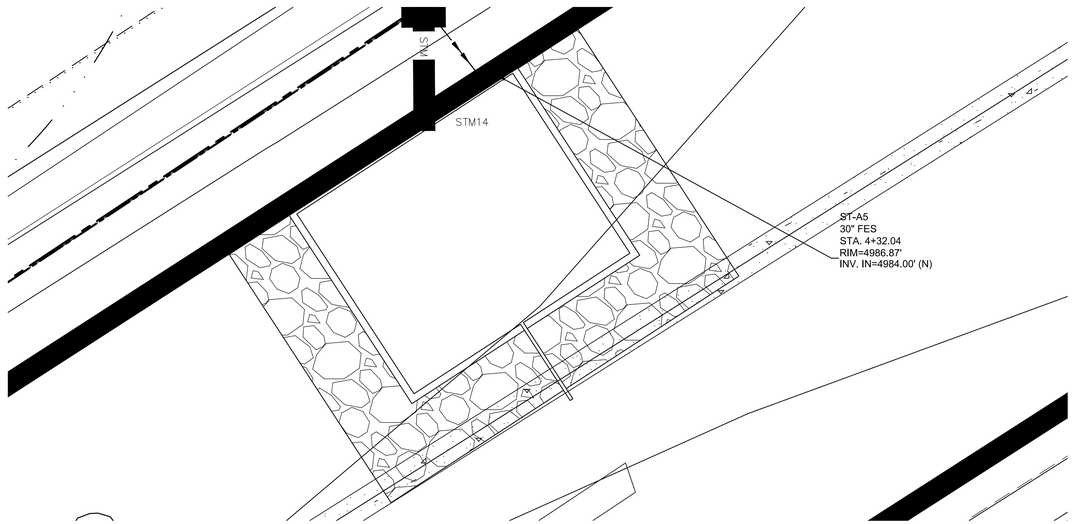

FOREBAY A DETAIL

SCALE: 1" = 5'

127 S. DENVER AVE
FT. LUPTON, CO 80621
www.westernec.com
email@westernec.com
(720) 685-9951
FAX (720) 294-1330
Western Engineering Consultants, inc LLC

No.	REVISION	DATE	BY
1	UPDATED DRAINAGE-TOWN SUBMITTAL	08/16/19	CFC

KEENE LAND LLC
CONTACT: RICK ROBERTSON
853 WR 5
KEENESBURG, CO 80643
(303)961-0031

FOREBAY DETAILS
MARKET STREET BUSINESS PARK SUBDIVISION
TOWN of KEENESBURG, WELD COUNTY, COLORADO

Dig Safely.
CALL UNCC
THREE WORKING DAYS BEFORE YOU DIG
811
www.uncc.org
UTILITY NOTIFICATION CENTER OF COLORADO

COLORADO REGISTERED PROFESSIONAL ENGINEER
CHRISTIAN F. CORY
FOR REVIEW ONLY
08/16/19
33802
ONLY VALID FOR CONSTRUCTION IF SEAL & ORIGINAL SIGNATURE ARE ON EACH SHEET

INITIAL PLAN RELEASE: 08/16/19
DESIGNED BY: CFC
DRAWN BY: CFC
CHECKED BY: CFC
PROJECT NO. 01-0187.003.00
DOC CON # C4.08-DRNGDTL
SHT C4.08

T:\0187_003_00-KEENE LAND-MARKET BUS PARK\Dwg\CDs\0187_003-WECI-CDS-4.00.dwg, C4.08-FBDTLS, 8/16/2019 3:44:36 PM, DWG To PDF.pc3, WEC 24*36, WEC 24*36

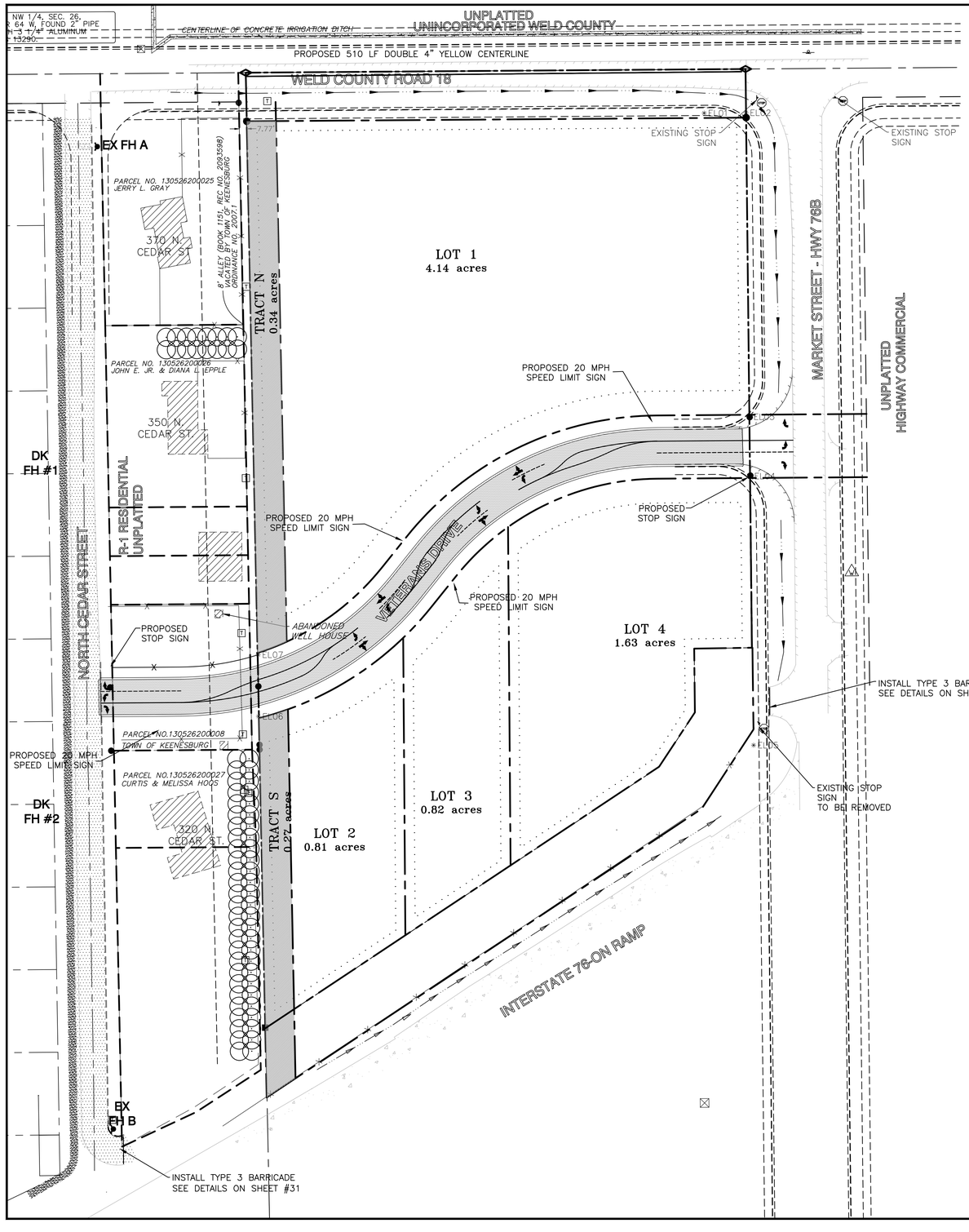

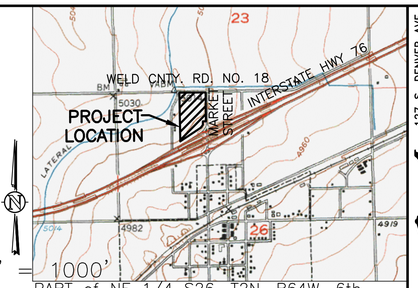

PART of NE 1/4 S26, T2N, R64W, 6th PM

SHOWN VICINITY MAP TAKEN FROM USGS QUAD – KEENESBURG 40104–A5

SIGNAGE QUANTITIES

NEW STOP SIGNS	2
NEW SPEED LIMIT SIGNS	4
REMOVAL OF SIGNS	1
NEW BARRICADES	2

NOTES

THIS PLAN IS INTENDED AS THE STRIPING & SIGNAGE PLAN FOR MARKET STREET BUSINESS PARK SUBDIVISION.

ALL IMPROVEMENTS ARE PROPOSED UNLESS NOTED AS EXISTING.

IT IS THE OWNER AND/OR THE CONTRACTOR'S RESPONSIBILITY TO ATTAIN ALL APPROPRIATE PERMITS AND REVIEW APPROVALS FROM THE STATE OF COLORADO AND CITY OF BRIGHTON RESPECTIVELY.

SEE "AS BUILT/BOUNDARY SURVEY" COMPLETED BY AMERICAN WEST LAND SURVEY – DATED MAY 24, 2006.

SEE COVER FOR PROJECT BENCHMARK AND BASIS OF BEARING.

SITE BENCHMARK WAS ESTABLISHED BEING A 3" BRASS CAP IN CONCRETE LYING FIVE FEET WEST OF A CONCRETE IRRIGATION DITCH NEAR THE INTERSECTION OF COUNTY ROAD 18 AND NORTH CEDAR STREET, AND THIRTY FEET NORTH OF THE CENTERLINE OF COUNTY ROAD 18. STAMPED "NATIONAL GEODETIC SURVEY ACD 1" HAVING AN ELEVATION OF 5008.06 FEET (NAVD 1988)

ANY REFERENCE TO EASEMENTS, SURVEY POINTS, OR EXISTING UTILITIES AND FEATURES ARE BASED SOLELY FROM SURVEY INFORMATION PROVIDED BY OTHERS – SPECIFICALLY PER SAME SURVEY NOTED ABOVE.

NOT ALL UNCC UTILITY LOCATES HAVE BEEN PERFORMED. IT IS THE CONTRACTOR'S RESPONSIBILITY TO VERIFY ALL UTILITIES ARE LOCATED AND SURVEY PROVIDED TO THE OWNER AND ENGINEER PRIOR TO CONSTRUCTION DRAWING RELEASE.

SIZES OF EXISTING UTILITIES AS TAKEN FROM 'CITY OF BRIGHTON WATER AND SEWER MAPS DATED JUNE 2004.

SYMBOL LEGEND

- 45 DEG BEND
- 22.5 DEG BEND
- RESTRAINED PLUG
- RESTRAINED TEE
- WATER METER
- RESTRAINED CROSS
- FIRE HYDRANT
- RESTRAINED WATER VALVE
- PIPE CROSSOVER
- MANHOLE
- PARKING STALL COUNT

LINETYPE LEGEND

- LOT / PROPERTY LINE
- RIGHT OF WAY LINE
- EASEMENT
- TO BE ABANDONED LOT LINE
- EXISTING BUILDING, CURB
- EDGE of ASPHALT
- CHAINLINK FENCE
- WIRE FENCE
- POND WQ W/S
- SWALE
- OHE — EXISTING OVERHEAD ELEC
- E — EXISTING ELECTICAL LINE
- ST — EXISTING STORM LINE
- S — EXISTING SANITARY LINE
- W — EXISTING WATER LINE
- G — EXISTING GAS LINE
- FIBER — EXISTING FIBER OPTIC LINE
- T — EXISTING TELEPHONE LINE
- SA — PROPOSED SANITARY LINE
- SS — PROPOSED SANITARY SERVICE
- STM — PROPOSED STORM LINE
- WA — PROPOSED WATER LINE
- WAS — PROPOSED WATER SERVICE
- GA — PROPOSED GAS LINE
- EL — PROPOSED ELECTRIC LINE
- PH — PROPOSED TELEPHONE LINE

60 30 0 60 120

FULL SCALE: 1" = 60'
HALF SCALE: 1" = 120'

Western Engineering Consultants, inc LLC
127 S. DENVER AVE
FT. LUPTON, CO 80621
www.westernecl.com
email@westernecl.com
(720) 685-9951
FAX (720) 294-1330

No.	REVISION	DATE	BY
0	PRELIM/FINAL PLAT SUBMITAL	08/06/19	CFC

KEENE LAND LLC
CONTACT: RICK ROBERTSON
853 W 55
KEENESBURG, CO 80643
(303)961-0031

INTERIM STRIPING & SIGNAGE PLAN
MARKET STREET BUSINESS PARK SUBDIVISION
TOWN of KEENESBURG, WELD COUNTY, COLORADO

Dig Safely.
CALL UNCC
THREE WORKING DAYS BEFORE YOU DIG
811
www.uncc.org
UTILITY NOTIFICATION CENTER OF COLORADO

COLORADO REGISTERED PROFESSIONAL ENGINEER
CHAWN F. CRAIG
FOR
33802
REVIEW ONLY
08/06/19
ONLY VALID FOR CONSTRUCTION IF SEAL & ORIGINAL SIGNATURE ARE ON EACH SHEET

INITIAL PLAN RELEASE: 08/06/19
DESIGNED BY: CFC
DRAWN BY: CFC
CHECKED BY: CFC
PROJECT NO. 01-0187.003.00
DOC CON # C5.001-INTSIGN
SHT C5.001

T:\0187_003_00-KEENE LAND-MARKET BUS PARK\Dwg\CDs\0187_003-WEC1-CDS-5.00.dwg, C5.00I-INTSIGN, 8/16/2019 6:21:03 PM, DWG To PDF.pc3, WEC 24*36, WEC 24*36

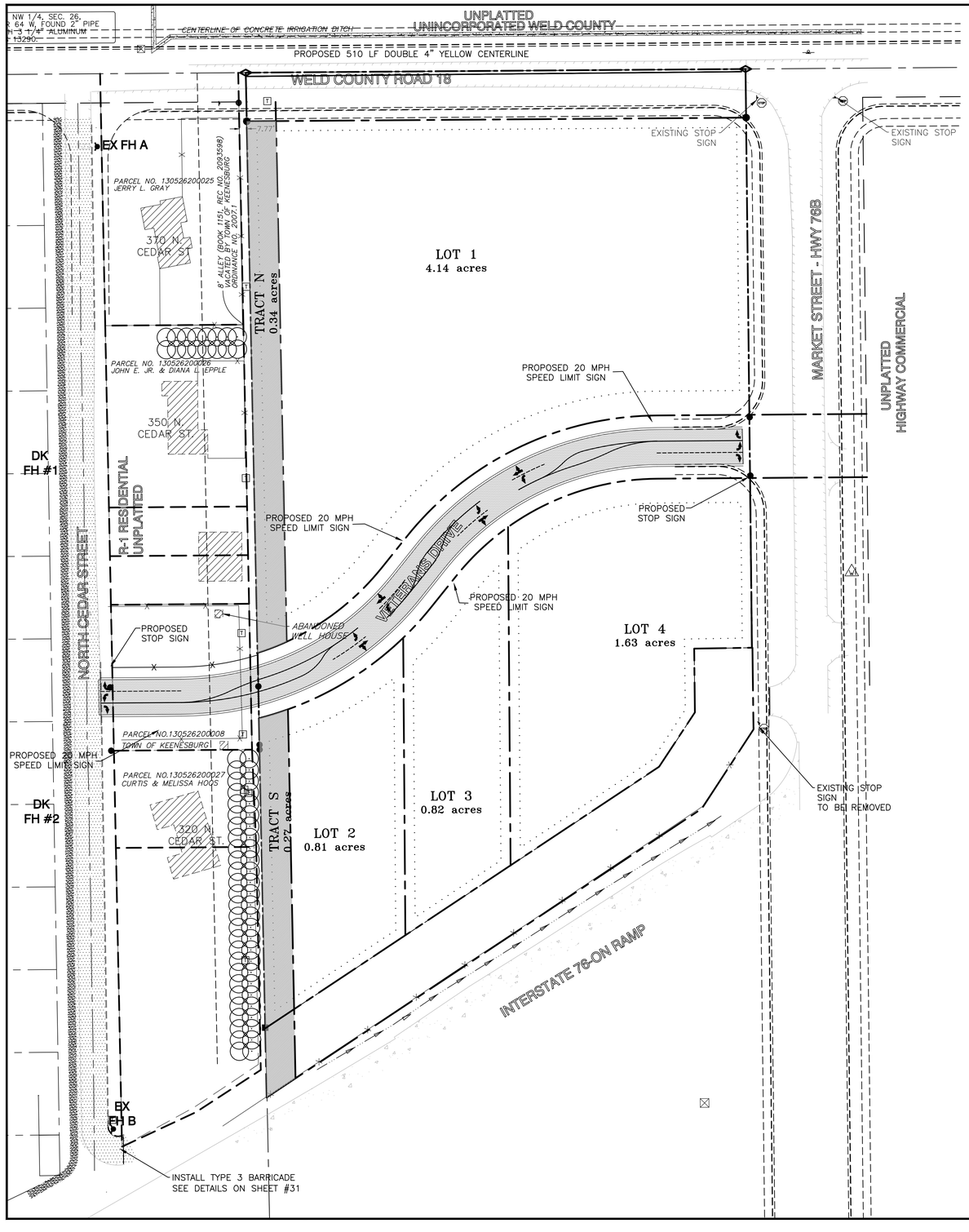

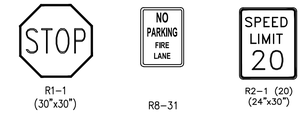

SIGNAGE QUANTITIES

NEW STOP SIGNS	2
NEW SPEED LIMIT SIGNS	4
REMOVAL OF SIGNS	1
NEW BARRICADES	2

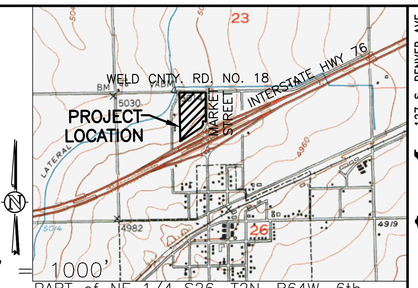

PART of NE 1/4 S26, T2N, R64W, 6th PM

SHOWN VICINITY MAP TAKEN FROM USGS QUAD – KEENESBURG 40104–A5

NOTES

THIS PLAN IS INTENDED AS THE STRIPING & SIGNAGE PLAN FOR MARKET STREET BUSINESS PARK SUBDIVISION.

ALL IMPROVEMENTS ARE PROPOSED UNLESS NOTED AS EXISTING.

IT IS THE OWNER AND/OR THE CONTRACTOR'S RESPONSIBILITY TO ATTAIN ALL APPROPRIATE PERMITS AND REVIEW APPROVALS FROM THE STATE OF COLORADO AND CITY OF BRIGHTON RESPECTIVELY.

SEE "AS BUILT/BOUNDARY SURVEY" COMPLETED BY AMERICAN WEST LAND SURVEY – DATED MAY 24, 2006.

SEE COVER FOR PROJECT BENCHMARK AND BASIS OF BEARING.

SITE BENCHMARK WAS ESTABLISHED BEING A 3" BRASS CAP IN CONCRETE LYING FIVE FEET WEST OF A CONCRETE IRRIGATION DITCH NEAR THE INTERSECTION OF COUNTY ROAD 18 AND NORTH CEDAR STREET, AND THIRTY FEET NORTH OF THE CENTERLINE OF COUNTY ROAD 18. STAMPED "NATIONAL GEODETIC SURVEY ACD 1" HAVING AN ELEVATION OF 5008.06 FEET (NAVD 1988)

ANY REFERENCE TO EASEMENTS, SURVEY POINTS, OR EXISTING UTILITIES AND FEATURES ARE BASED SOLELY FROM SURVEY INFORMATION PROVIDED BY OTHERS – SPECIFICALLY PER SAME SURVEY NOTED ABOVE.

NOT ALL UNCC UTILITY LOCATES HAVE BEEN PERFORMED. IT IS THE CONTRACTOR'S RESPONSIBILITY TO VERIFY ALL UTILITIES ARE LOCATED AND SURVEY PROVIDED TO THE OWNER AND ENGINEER PRIOR TO CONSTRUCTION DRAWING RELEASE.

SIZES OF EXISTING UTILITIES AS TAKEN FROM 'CITY OF BRIGHTON WATER AND SEWER MAPS DATED JUNE 2004.

SYMBOL LEGEND

- 45 DEG BEND
- 22.5 DEG BEND
- RESTRAINED PLUG
- RESTRAINED TEE
- WATER METER
- RESTRAINED CROSS
- FIRE HYDRANT
- RESTRAINED WATER VALVE
- PIPE CROSSOVER
- MANHOLE
- PARKING STALL COUNT

LINETYPE LEGEND

- LOT / PROPERTY LINE
- RIGHT OF WAY LINE
- EASEMENT
- TO BE ABANDONED LOT LINE
- EXISTING BUILDING, CURB
- EDGE of ASPHALT
- CHAINLINK FENCE
- WIRE FENCE
- POND WQ W/S
- SWALE
- OHE — EXISTING OVERHEAD ELEC
- E — EXISTING ELECTICAL LINE
- ST — EXISTING STORM LINE
- S — EXISTING SANITARY LINE
- W — EXISTING WATER LINE
- G — EXISTING GAS LINE
- FIBER — EXISTING FIBER OPTIC LINE
- T — EXISTING TELEPHONE LINE
- SA — PROPOSED SANITARY LINE
- SS — PROPOSED SANITARY SERVICE
- STM — PROPOSED STORM LINE
- WA — PROPOSED WATER LINE
- WAS — PROPOSED WATER SERVICE
- GA — PROPOSED GAS LINE
- EL — PROPOSED ELECTRIC LINE
- PH — PROPOSED TELEPHONE LINE

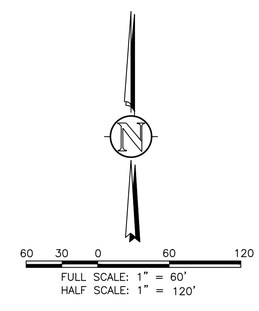

Western Engineering Consultants, inc LLC
127 S. DENVER AVE
FT. LUPTON, CO 80621
www.westernecl.com
email@westernecl.com
(720) 685-9951
FAX (720) 294-1330

No.	REVISION	DATE	BY
0	PRELIM/FINAL PLAT SUBMITTAL	08/06/19	CFC

KEENE LAND LLC
CONTACT: RICK ROBERTSON
853 WEST 5
KEENESBURG, CO 80643
(303)961-0031

FUTURE STRIPING & SIGNAGE PLAN
MARKET STREET BUSINESS PARK SUBDIVISION
TOWN of KEENESBURG, WELD COUNTY, COLORADO

Dig Safely.
CALL UNCC
THREE WORKING DAYS BEFORE YOU DIG
811
www.uncc.org
UTILITY NOTIFICATION CENTER OF COLORADO

COLORADO REGISTERED PROFESSIONAL ENGINEER
CHAWIN F. CRAY
FOR
33802
REVIEW ONLY
08/06/19
ONLY VALID FOR CONSTRUCTION IF SEAL & ORIGINAL SIGNATURE ARE ON EACH SHEET

INITIAL PLAN RELEASE: 08/06/19
DESIGNED BY: CFC
DRAWN BY: CFC
CHECKED BY: CFC
PROJECT NO. 01-0187.003.00
DOC CON # C5.00F-FUTSIGN
SHT C5.00F

T:\0187_003_00-KEENE LAND-MARKET BUS PARK\Dwg\CDs\0187_003-WEC\-CDS-5.00.dwg, C5.00F-FUTSIGN, 8/16/2019 6:21:09 PM, , DWG To PDF.pc3, WEC 24"36, WEC 24"36

CURB RAMP GENERAL NOTES:

(1) IN NEW CONSTRUCTION OR FULL-DEPTH RECONSTRUCTION, PROVIDE A SEPARATE CURB RAMP FOR EACH MARKED OR UNMARKED PEDESTRIAN STREET CROSSING. CURB RAMPS SHALL BE CONTAINED WHOLLY WITHIN THE WIDTH OF THE PEDESTRIAN STREET CROSSING OR CROSSWALK THEY SERVE, OR AS SHOWN ON THE CONTRACT PLANS.

(2) ALTERATIONS ARE DEFINED AS CHANGES TO AN EXISTING HIGHWAY THAT AFFECT PEDESTRIAN ACCESS, CIRCULATION, OR USE. ALTERATIONS INCLUDE, BUT ARE NOT LIMITED TO, RESURFACING, REHABILITATION, RECONSTRUCTION, CURB RAMP RETROFITS, HISTORIC RESTORATION, OR CHANGES OR REARRANGEMENT TO STRUCTURAL PARTS OR ELEMENTS OF A PEDESTRIAN FACILITY.

(3) A WALKABLE SURFACE IS DEFINED AS A PAVED SURFACE ADJACENT TO A CURB RAMP OR TURNING SPACE, WITHOUT RAISED OBSTACLES, THAT COULD BE MISTAKENLY TRAVERSED BY A USER WHO IS VISUALLY IMPAIRED.

(4) IN ALTERATIONS, WHERE AN EXISTING PHYSICAL CONSTRAINT PREVENTS PROVIDING A SEPARATE CURB RAMP FOR EACH PEDESTRIAN STREET CROSSING, A SINGLE DIAGONAL RAMP (ON THE APEX) SHALL BE PERMITTED TO SERVE BOTH PEDESTRIAN STREET CROSSINGS. THE USE OF A SINGLE DIAGONAL RAMP SHALL BE APPROVED BY THE ENGINEER PRIOR TO CONSTRUCTION. DIAGONAL RAMPS ARE NOT ACCEPTABLE IN NEW CONSTRUCTION OR FULL-DEPTH RECONSTRUCTION.

(5) DETECTABLE WARNINGS SURFACES (DWS) ARE INTENDED TO INDICATE THE BOUNDARY BETWEEN A PEDESTRIAN ROUTE AND VEHICULAR ROUTE WHERE THERE IS A FLUSH RATHER THAN CURBED CONNECTION. DWS ARE NOT INTENDED TO PROVIDE WAYFINDING. DWS SHALL BE PROVIDED AT THE FOLLOWING LOCATIONS;
1. CURB RAMPS, BLENDED TRANSITIONS, AND DEPRESSED CORNERS AT PEDESTRIAN STREET CROSSINGS;
2. PEDESTRIAN REFUGE ISLANDS (6 FEET IN WIDTH OR GREATER);
3. BOARDING PLATFORMS AT TRANSIT STOPS WHERE THE EDGE OF THE PLATFORM IS NOT PROTECTED TO PEDESTRIAN CROSS TRAFFIC; AND
4. BOARDING AREAS AT SIDEWALK OR STREET LEVEL TRANSIT STOPS WHERE THE AREA IS NOT PROTECTED TO PEDESTRIAN CROSS TRAFFIC.

(6) DETECTABLE WARNING SURFACES SHALL CONTRAST VISUALLY WITH THE ADJACENT GUTTER, HIGHWAY, OR PEDESTRIAN ACCESS ROUTE SURFACE, EITHER LIGHT-ON-DARK OR DARK-ON-LIGHT. FEDERAL YELLOW COLOR IS PREFERRED, HOWEVER, OTHER COLORS MAY BE USED IF APPROVED BY THE ENGINEER.

(7) IN ALTERATIONS, TO AVOID CHASING GRADE INDEFINITELY ON STEEP ROADWAYS, A CURB RAMPS LENGTH IS NOT REQUIRED TO EXCEED 15 FEET REGARDLESS OF THE RESULTING RAMP RUNNING SLOPE.

(8) ALL SLOPES ARE MEASURED WITH RESPECT TO A LEVEL PLANE.

(9) DRAINAGE STRUCTURES, TRAFFIC SIGNAL EQUIPMENT, OR OTHER OBSTRUCTIONS SHALL NOT BE INSTALLED ON THE CURB RAMP, OR TURNING SPACE AREAS.

(10) IN NEW CONSTRUCTION, PULL BOXES, METER BOXES, MAINTENANCE HOLE COVERS, VAULT LIDS, OR SIMILAR, SHALL NOT BE CONSTRUCTED WITHIN ANY PART OF CURB RAMP OR TURNING SPACE. IN ALTERATIONS, WHERE THESE ITEMS CANNOT BE RELOCATED OUTSIDE OF THE CURB RAMP OR TURNING SPACE, THEY MUST NOT CREATE A VERTICAL DISCONTINUITY GRATER THAN 1/2 INCH. ANY VERTICAL DISCONTINUITY BETWEEN 1/4 INCH AND 1/2 INCH SHALL BE BEVELED WITH A SLOPE NOT STEEPER THAN 1V:2H. THE BEVEL SHALL BE APPLIED ACROSS THE ENTIRE SURFACE DISCONTINUITY.

(11) CONSTRUCTION OF ANY REQUIRED PEDESTRIAN CURB SHALL BE INCLUDED IN THE BID PRICE OF THE CONCRETE CURB RAMP AND WILL NOT BE PAID FOR SEPARATELY.

(12) ALL CURB RAMP JOINTS AND GRADE BREAKS SHALL BE FLUSH (0'-1/8"). THE JOINT BETWEEN THE ROADWAY SURFACE AND THE GUTTER PAN SHALL BE FLUSH.

(13) THE CONTRACTOR SHALL VERIFY REMOVAL LIMITS ARE SUFFICIENT TO PROVIDE POSITIVE DRAINAGE, MAINTAIN EXISTING DRAINAGE PATTERNS, AND AVOID PONDING IN THE FINAL CONFIGURATION.

(14) FLARED SIDE SLOPES MAY EXCEED 10.0% ONLY WHERE THEY ABUT A NON-WALKABLE SURFACE, OR WHERE THE ADJACENT RAMP SURFACE IS BLOCKED TO PEDESTRIAN TRAFFIC.

(15) THE CHANGE IN GRADE AT THE BOTTOM OF THE CURB RAMP SHALL NOT EXCEED AN ALGEBRAIC DIFFERENCE OF 13.33%. THE COUNTER SLOPE OF THE GUTTER AT THE FOOT OF A RAMP, TURNING SPACE, OR BLENDED TRANSITION SHALL NOT EXCEED 5.0%.

(16) GRADE BREAKS AT THE TOP AND BOTTOM OF RAMP RUNS SHALL BE PERPENDICULAR TO THE DIRECTION OF THE RAMP RUN. GRADE BREAKS SHALL NOT BE PERMITTED ON THE SURFACE OF THE RAMP RUN OR TURNING SPACE. SURFACE SLOPES THAT MEET AT GRADE BREAKS SHALL BE FLUSH.

(17) A BROOM FINISH, WITH SWEEPS PERPENDICULAR TO THE DIRECTION OF PEDESTRIAN TRAFFIC, SHALL BE APPLIED TO ALL RAMP AND TURNING SPACE SURFACES.

(18) IN ALTERATIONS, WHERE A RAMP OR TURNING SPACE MUST TIE INTO AN EXISTING GRADE THAT CANNOT BE ALTERED, THE RAMP OR TURNING SPACE MAY BE WARPED TO TRANSITION TO THE REQUIRED CROSS SLOPE. THE TRANSITION TO THE REQUIRED CROSS SLOPE SHALL BE SPREAD EVENLY OVER THE LENGTH OF THE RAMP OR TURNING SPACE TO MINIMIZE THE DEGREE OF WARPING. THE RATE OF CHANGE ON A RAMP OR TURNING SPACE SHALL NOT EXCEED 3% PER LINEAR FOOT.

(19) DESIGN AND CONSTRUCT CURB RAMPS, TURNING SPACES, AND FLARE SLOPES WITH THE FLATTEST SLOPES POSSIBLE. THE SLOPES INDICATED IN THESE DETAILS SHOW THE MAXIMUM SLOPES ALLOWABLE. PREFERRED VALUES TO BE USED DURING DESIGN, LAYOUT, AND CONSTRUCTION ARE:
- RAMP RUNNING SLOPE 7.5%
- RAMP CROSS SLOPE 1.5%
- TURNING SPACE RUNNING SLOPE 1.5%
- TURNING SPACE CROSS SLOPE 1.5%
- FLARE SLOPE 8.0-9.0%

(20) WHERE SNOW REMOVAL EQUIPMENT WILL BE USED TO CLEAR THE PEDESTRIAN ACCESS ROUTE, CONSULT THE ENGINEER PRIOR TO CONSTRUCTION TO ENSURE THE WIDTH AND THICKNESS OF CURB RAMPS IS SUFFICIENT TO ACCOMODATE SUCH EQUIPMENT.

(21) PROVIDE EXPANSION JOINT MATERIAL 1/2" THICK WHERE CURB RAMPS ADJOIN ANY RIGID PAVEMENT, OR STRUCTURE. THE TOP OF THE JOINT FILLER MATERIAL SHALL BE FLUSH WITH ADJOINING CONCRETE SURFACES. THE EXPANSION JOINT MATERIAL SHALL EXTEND FOR THE FULL DEPTH OF THE CONCRETE SURFACE.

(22) PROVIDE TIE BAR REINFORCING BETWEEN INDEPEDENTLY POURED CONCRETE CURB RAMPS OR TURNING SPACES AND CURB AND GUTTER. DRILL AND GROUT NO. 4 12 INCH LONG REINFORCEMENT BARS (EPOXY COATED) AT 18 INCHES CENTER TO CENTER MINIMUM.

CURB RAMP PAY AREAS

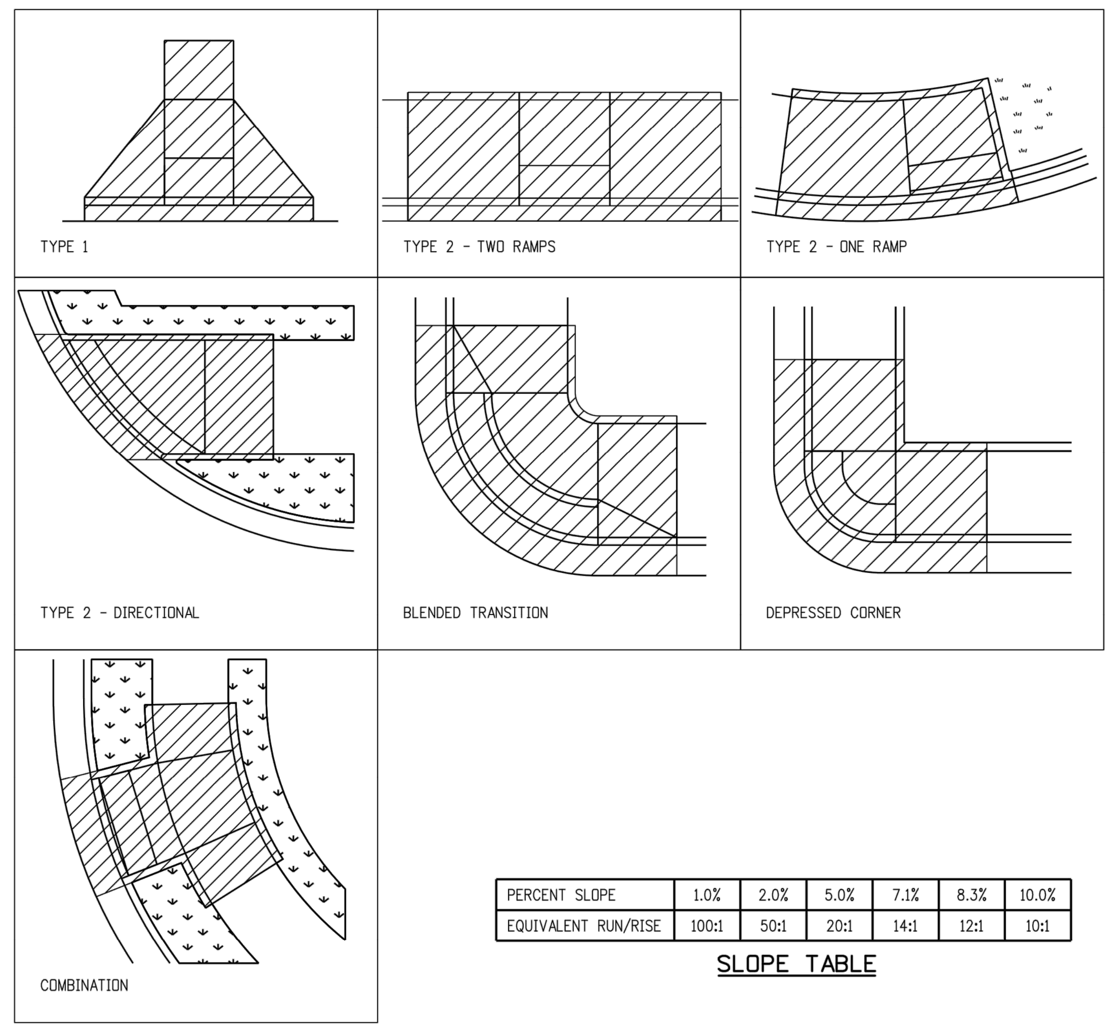

PERCENT SLOPE	1.0%	2.0%	5.0%	7.1%	8.3%	10.0%
EQUIVALENT RUN/RISE	100:1	50:1	20:1	14:1	12:1	10:1

SLOPE TABLE

GENERAL NOTES & PAY AREAS

Computer File Information			Sheet Revisions	
Creation Date: 07/04/12	Initials: JBK		Date:	Comments
Last Modification Date: 05/03/19	Initials: LTA	(R-X)	05/03/19	Completely revised every sheet.
Full Path: www.codot.gov/business/designsupport		(R-X)		
Drawing File Name: 6080101010.dgn		(R-X)		
CAD Ver.: MicroStation V8 Scale: Not to Scale Units: English		(R-X)		

Colorado Department of Transportation
2829 West Howard Place
CDOT HQ, 3rd Floor
Denver, CO 80204
Phone: 303-757-9021 FAX: 303-757-9868
Division of Project Support JBK/LTA

CURB RAMPS

Issued By: Project Development Branch July 4, 2012

STANDARD PLAN NO. M-608-1

Sheet No. 1 of 10

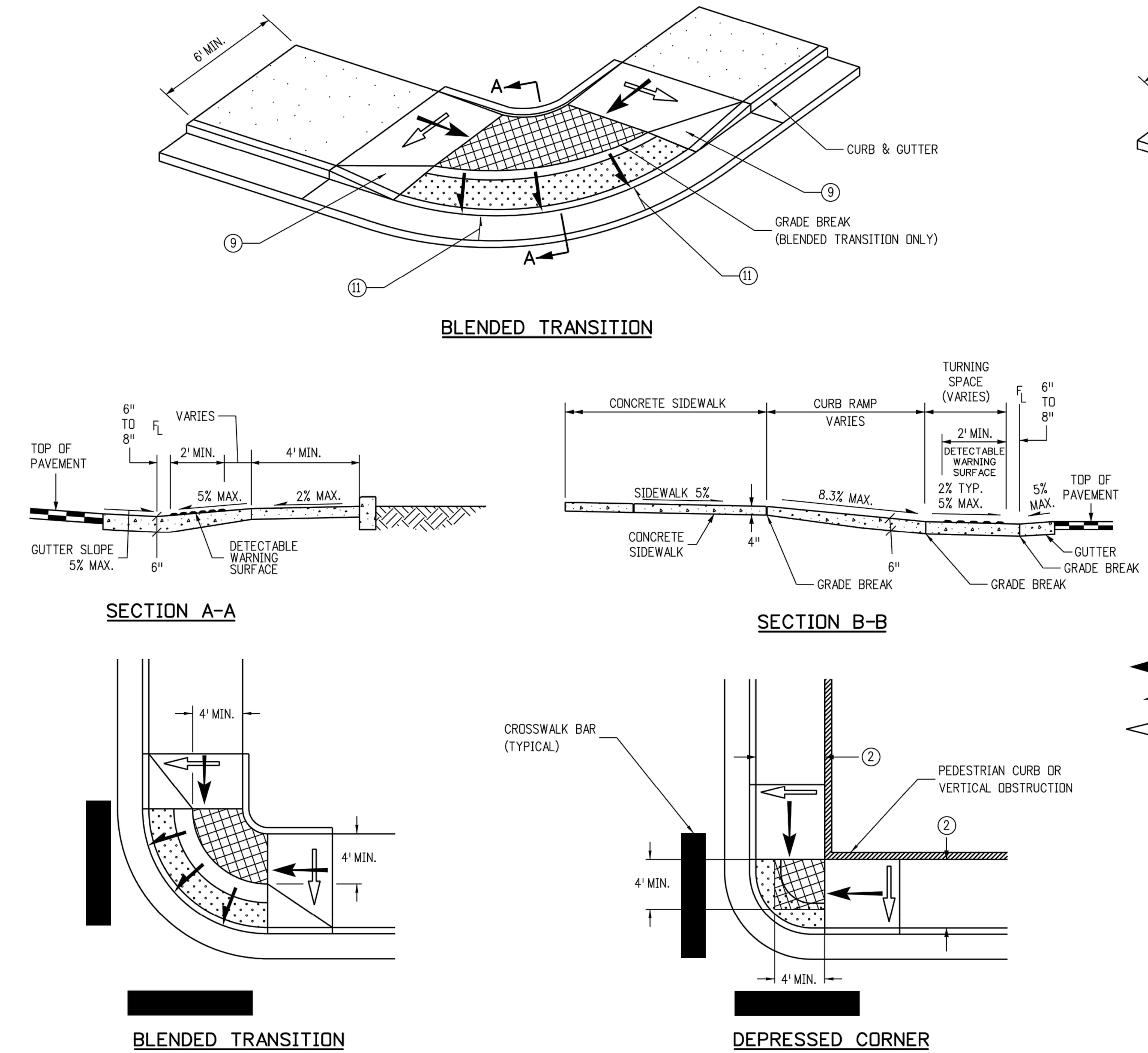

SIDEWALK

TURNING SPACE (4) (5) (6)

DETECTABLE WARNING SURFACE (DWS)

BLENDED TRANSITION & DEPRESSED CORNER NOTES

(1) PERPENDICULAR AND PARALLEL RAMP CONFIGURATIONS ARE PREFFERED. BLENDED TRANSITIONS AND DEPRESSED CORNERS SHOULD ONLY BE USED WHERE SITE CONDITIONS MAKE THEM A MORE APPROPRIATE OPTION, OR WHERE PERPENDICULAR OR PARALLEL RAMPS CANNOT BE INSTALLED DUE TO A PHYSICAL SITE CONSTRAINT.

(2) RAMP WIDTH - PROVIDE 5 FT. OR GREATER WHERE POSSIBLE. IF SITE CONSTRAINTS DO NOT PERMIT, PROVIDE 4FT. WIDTH MINIMUM. RAMPS SERVICING SHARED USE PATHS SHALL MATCH THE WIDTH OF THE PATH.

(3) RAMP RUNNING SLOPE - 8.3% MAX.

(4) BLENDED TRANSITION RUNNING SLOPE - 5.0% MAX.

(5) RAMP AND TURNING SPACE CROSS SLOPE - 2.0% TYPICAL. AT CROSSINGS WITHOUT YIELD OR STOP CONTROL, OR WITH A SIGNAL WHERE VEHICLES CAN PROCEED THROUGH THE INTERSECTION WITHOUT SLOWING OR STOPPING, THE CROSS SLOPE OF RAMPS AND TURNING SPACES MAY EQUAL THE HIGHWAY GRADE.

(6) TURNING SPACE DIMENSIONS - PROVIDE A 4 FT. X 4 FT. MIN. TURNING SPACE AT THE BOTTOM OF RAMP RUNS. THE TURNING SPACE MAY CONTAIN THE DETECTABLE WARNING SURFACES.

(7) RAMP ALIGNMENT - TURNING SPACE SHALL BE ALIGNED TO BE FULLY CONTAINED WITHIN THE CROSSWALK OR STREET CROSSING(S) THEY SERVE.

(8) RAMP LENGTH - RAMP LENGTH IS DEPENDENT UPON THE RAMP SLOPE AND THE CHANGE OF ELEVATION FROM THE TURNING SPACE TO THE SIDEWALK. WHERE TERRAIN IS SLOPING A RAMP IS NOT REQUIRED TO CHASE GRADE MORE THAN 15 FT. REGARDLESS OF THE RESULTING RAMP SLOPE.

(9) RAMP FLARES - WHERE A RAMP EDGE ABUTS A WALKABLE SURFACE, A FLARED SIDE MUST BE PROVIDED. RAMP FLARE SLOPES SHALL NOT EXCEED 10.0%.

(10) VERTICAL CURB RETURNS - VERTICAL CURB RETURNS MAY BE USED ONLY WHERE A RAMP ABUTS A NON-WALKABLE SURFACE, OR WHERE A RAMP IS PROTECTED FROM PEDESTRIAN CROSS TRAFFIC (FOR EXAMPLE BY A SIGNAL CABINET OR UTILITY POLE WHICH BLOCKS PASSAGE).

(11) GUTTER COUNTER SLOPE - 5.0% MAX.

(12) DWS PLACEMENT - DWS SHALL BE PLACED AROUND THE RADIUS AND LOCATED AT THE BACK OF CURB ON BLENDED TRANSITION AND DEPRESSED CORNER RAMPS.

TYPE 5 - DEPRESSED CORNER/BLENDED TRANSITION

Computer File Information			Sheet Revisions	
Creation Date: 07/04/12	Initials: JBK		Date:	Comments
Last Modification Date: 05/03/19	Initials: LTA	(R-X)	05/03/19	Completely revised every sheet.
Full Path: www.codot.gov/business/designsupport		(R-X)		
Drawing File Name: 6080107010.dgn		(R-X)		
CAD Ver.: MicroStation V8 Scale: Not to Scale Units: English		(R-X)		

Colorado Department of Transportation
2829 West Howard Place
CDOT HQ, 3rd Floor
Denver, CO 80204
Phone: 303-757-9021 FAX: 303-757-9868
Division of Project Support JBK/LTA

CURB RAMPS

Issued By: Project Development Branch July 4, 2012

STANDARD PLAN NO. M-608-1

Sheet No. 7 of 10

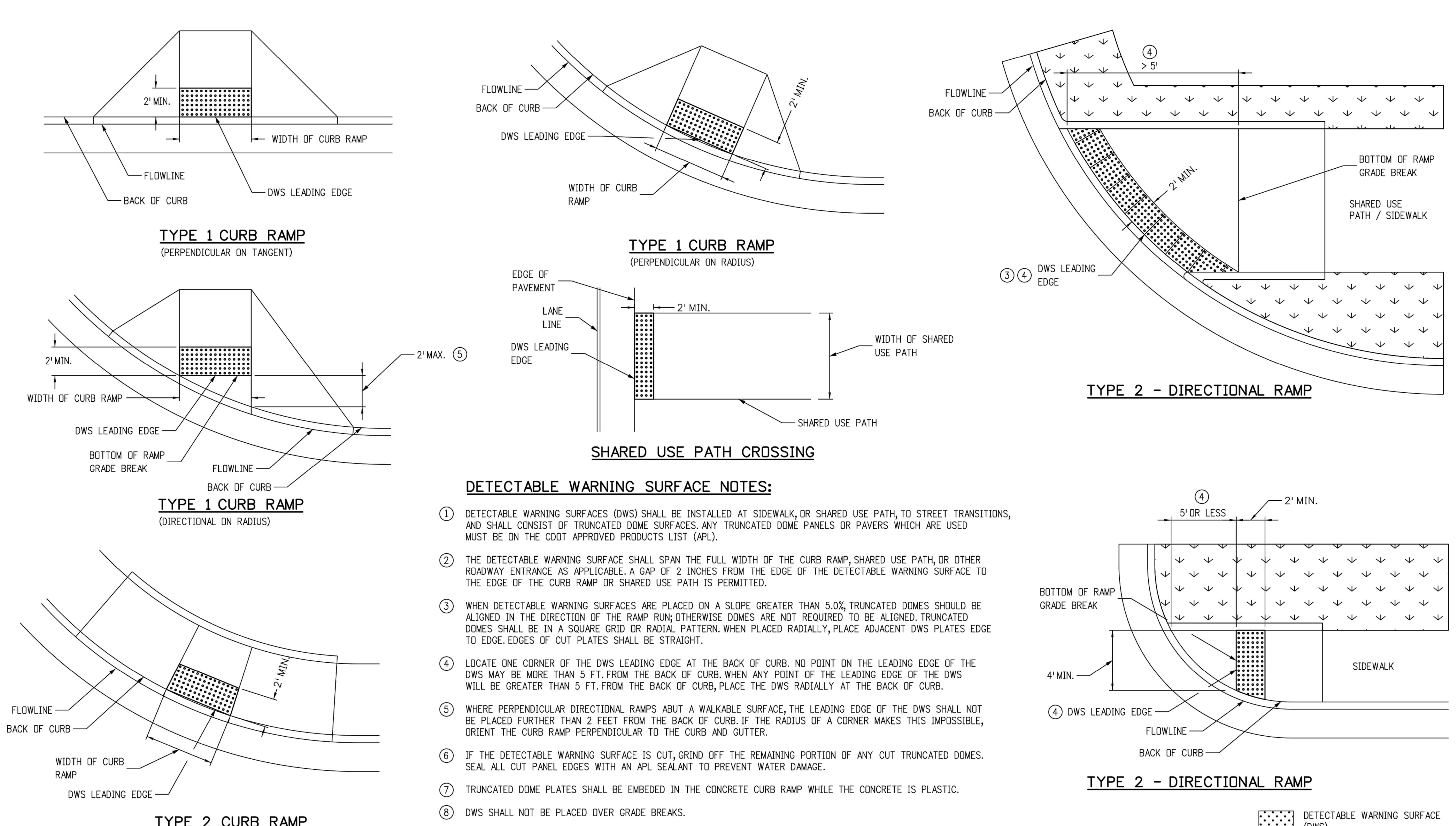

DETECTABLE WARNING SURFACE NOTES:

(1) DETECTABLE WARNING SURFACES (DWS) SHALL BE INSTALLED AT SIDEWALK, OR SHARED USE PATH, TO STREET TRANSITIONS, AND SHALL CONSIST OF TRUNCATED DOME SURFACES. ANY TRUNCATED DOME PANELS OR PAVERS WHICH ARE USED MUST BE ON THE CDOT APPROVED PRODUCTS LIST (APL).

(2) THE DETECTABLE WARNING SURFACE SHALL SPAN THE FULL WIDTH OF THE CURB RAMP, SHARED USE PATH, OR OTHER ROADWAY ENTRANCE AS APPLICABLE. A GAP OF 2 INCHES FROM THE EDGE OF THE DETECTABLE WARNING SURFACE TO THE EDGE OF THE CURB RAMP OR SHARED USE PATH IS PERMITTED.

(3) WHEN DETECTABLE WARNING SURFACES ARE PLACED ON A SLOPE GREATER THAN 5.0%, TRUNCATED DOMES SHOULD BE ALIGNED IN THE DIRECTION OF THE RAMP RUN; OTHERWISE DOMES ARE NOT REQUIRED TO BE ALIGNED. TRUNCATED DOMES SHALL BE IN A SQUARE GRID OR RADIAL PATTERN. WHEN PLACED RADIALLY, PLACE ADJACENT DWS PLATES EDGE TO EDGE. EDGES OF CUT PLATES SHALL BE STRAIGHT.

(4) LOCATE ONE CORNER OF THE DWS LEADING EDGE AT THE BACK OF CURB. NO POINT ON THE LEADING EDGE OF THE DWS MAY BE MORE THAN 5 FT. FROM THE BACK OF CURB. WHEN ANY POINT OF THE LEADING EDGE OF THE DWS WILL BE GREATER THAN 5 FT. FROM THE BACK OF CURB, PLACE THE DWS RADIALLY AT THE BACK OF CURB.

(5) WHERE PERPENDICULAR DIRECTIONAL RAMPS ABUT A WALKABLE SURFACE, THE LEADING EDGE OF THE DWS SHALL NOT BE PLACED FURTHER THAN 2 FEET FROM THE BACK OF CURB. IF THE RADIUS OF A CORNER MAKES THIS IMPOSSIBLE, ORIENT THE CURB RAMP PERPENDICULAR TO THE CURB AND GUTTER.

(6) IF THE DETECTABLE WARNING SURFACE IS CUT, GRIND OFF THE REMAINING PORTION OF ANY CUT TRUNCATED DOMES. SEAL ALL CUT PANEL EDGES WITH AN APL SEALANT TO PREVENT WATER DAMAGE.

(7) TRUNCATED DOME PLATES SHALL BE EMBEDED IN THE CONCRETE CURB RAMP WHILE THE CONCRETE IS PLASTIC.

(8) DWS SHALL NOT BE PLACED OVER GRADE BREAKS.

DETECTABLE WARNING SURFACE (DWS)

DETECTABLE WARNING SURFACE PLACEMENT

Computer File Information			Sheet Revisions	
Creation Date: 07/04/12	Initials: JBK		Date:	Comments
Last Modification Date: 05/03/19	Initials: LTA	(R-X)	05/03/19	Completely revised every sheet.
Full Path: www.codot.gov/business/designsupport		(R-X)		
Drawing File Name: 6080109010.dgn		(R-X)		
CAD Ver.: MicroStation V8 Scale: Not to Scale Units: English		(R-X)		

Colorado Department of Transportation
2829 West Howard Place
CDOT HQ, 3rd Floor
Denver, CO 80204
Phone: 303-757-9021 FAX: 303-757-9868
Division of Project Support JBK/LTA

CURB RAMPS

Issued By: Project Development Branch July 4, 2012

STANDARD PLAN NO. M-608-1

Sheet No. 9 of 10

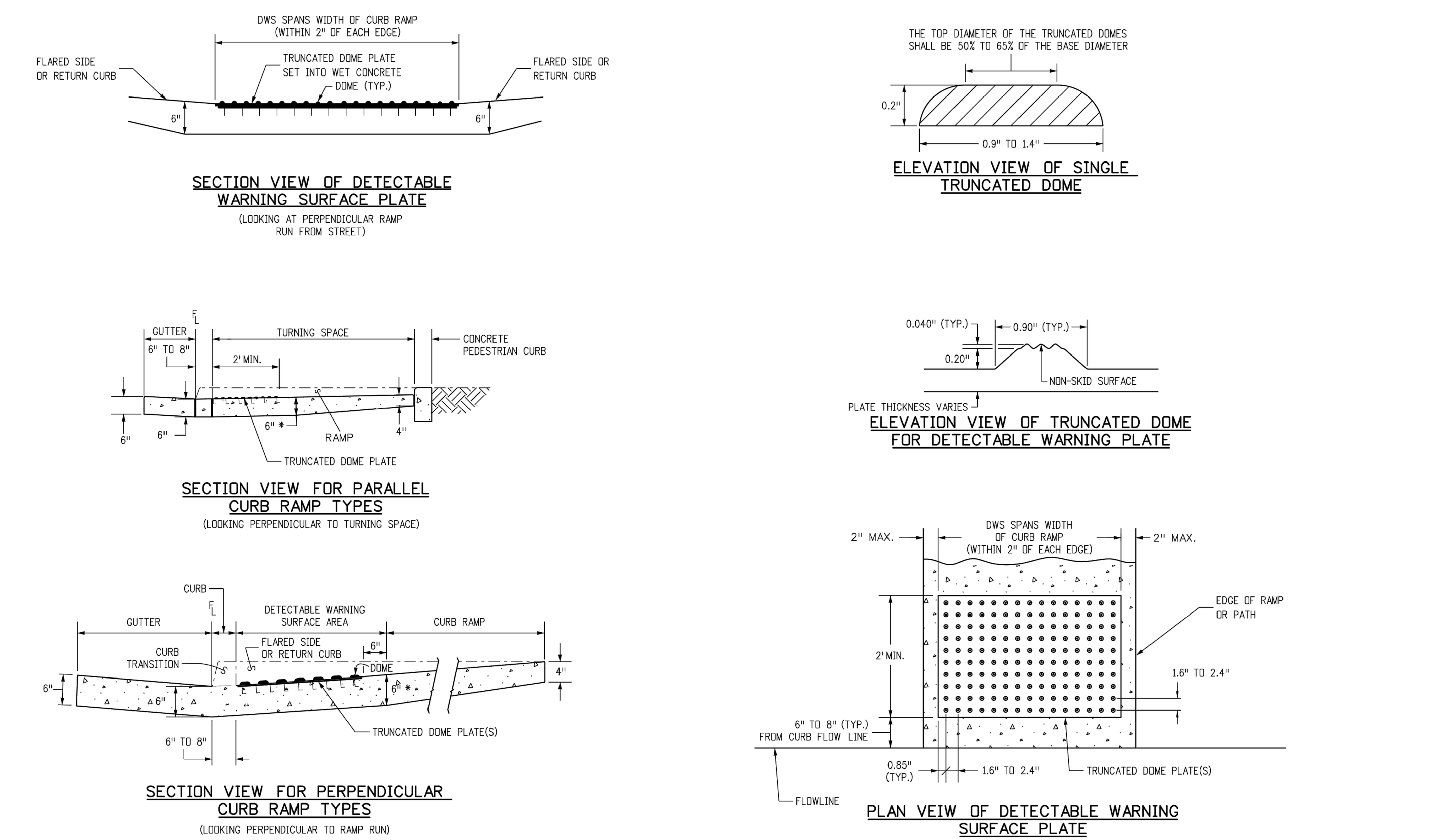

DETECTABLE WARNING SURFACE DETAILS

Computer File Information			Sheet Revisions	
Creation Date: 07/04/12	Initials: JBK		Date:	Comments
Last Modification Date: 05/03/19	Initials: LTA	(R-X)	05/03/19	Completely revised every sheet.
Full Path: www.codot.gov/business/designsupport		(R-X)		
Drawing File Name: 60801010010.dgn		(R-X)		
CAD Ver.: MicroStation V8 Scale: Not to Scale Units: English		(R-X)		

Colorado Department of Transportation
2829 West Howard Place
CDOT HQ, 3rd Floor
Denver, CO 80204
Phone: 303-757-9021 FAX: 303-757-9868
Division of Project Support JBK/LTA

CURB RAMPS

Issued By: Project Development Branch July 4, 2012

STANDARD PLAN NO. M-608-1

Sheet No. 10 of 10

127 S. DENVER AVE
FT. LUPTON, CO 80621
www.westerneci.com
email@westerneci.com
(720) 685-9951
FAX (720) 294-1330
Western Engineering Consultants, inc LLC

No.	REVISION	DATE	BY
0	PRELIM/FINAL PLAT SUBMITTAL	08/06/19	CFC

KEENE LAND, LLC
CONTACT: RICK ROBERTSON
8537 WCR 51
KEENESBURG, CO 80643
(303)961-0031

CDOT & MISCELLAIOUS DETAILS
MARKET STREET BUSINESS PARK SUBDIVISION
TOWN of KEENESBURG, WELD COUNTY, COLORADO

Dig Safely. CALL UNCC
THREE WORKING DAYS BEFORE YOU DIG
811
www.uncc.org
UTILITY NOTIFICATION CENTER OF COLORADO

COLORADO REGISTERED PROFESSIONAL ENGINEER CHADWIN F. COX FOR 33802 REVIEW ONLY 08/06/19

ONLY VALID FOR CONSTRUCTION IF SEAL & ORIGINAL SIGNATURE ARE ON EACH SHEET

INITIAL PLAN RELEASE: 08/06/19
DESIGNED BY: CFC
DRAWN BY: CFC
CHECKED BY: CFC
PROJECT NO. 01-0187.003.00
DOC CON # C5.01-DETAILS
SHT C5.01

T:\0187_003_00-KEENE LAND-MARKET BUS PARK\Dwg\CD\s\0187_003-WECI-CD5-5.00.dwg, C5.01-CDOTDTLS, 8/16/2019 6:21:14 PM, _DWG To PDF.pc3, WEC 24"36, WEC 24"36

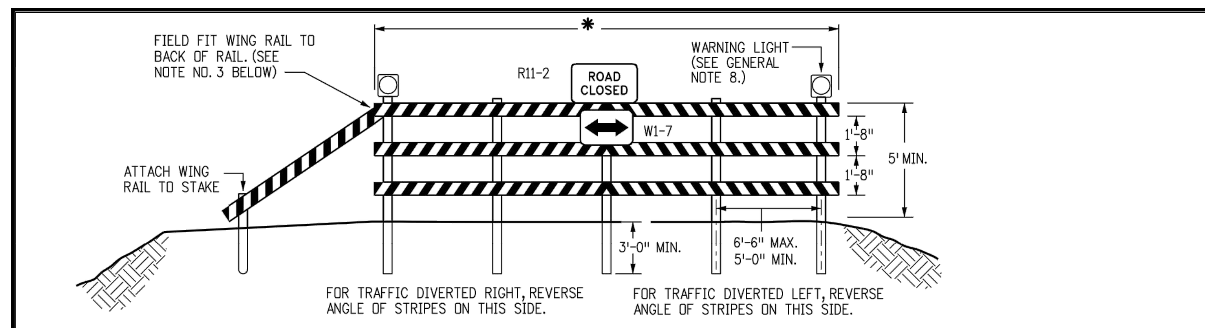

FIXED

* RAIL LENGTH TABLE

TYPE 3 BARRICADE		LENGTH
FIXED	MOVABLE	
F - A	M - A	8'- 14'
F - B	M - B	15'- 24'
F - C	M - C	25'- 35'
F - D	M - D	> 35'

NOTES

1. TYPE 3 BARRICADES HAVE 3 REFLECTORIZED RAIL FACES IF FACING TRAFFIC IN ONE DIRECTION AND 6 IF FACING TRAFFIC IN TWO DIRECTIONS.
2. THE PORTION OF THE POST ABOVE THE GROUND LINE SHALL BE PAINTED IN ACCORDANCE WITH THE APPROPRIATE GENERAL NOTE.
3. DETACHABLE EXTENSION WING RAILS FOR BYPASSING OF CONSTRUCTION EQUIPMENT ARE PERMITTED, WHEN NECESSARY, ON FIXED OR MOVABLE TYPE 3 BARRICADES. THE LENGTH SHALL BE ADEQUATE TO CLOSE THE BORROW PIT AND/OR SHOULDER AS REQUIRED.

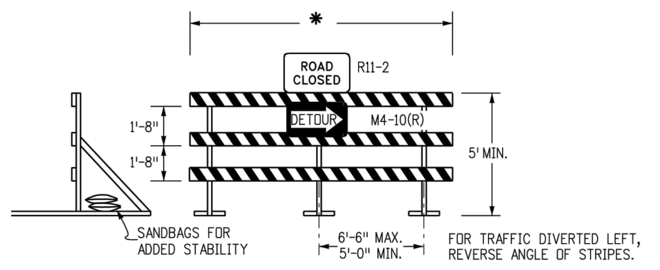

MOVABLE-SKIDS

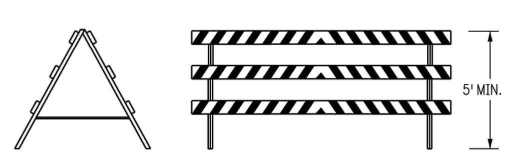

MOVABLE-HINGED

TYPICAL TYPE 3 BARRICADES

TYPICAL BARRICADE CHARACTERISTICS

	BARRICADE DESIGNATIONS
	TYPE 3
RAIL WIDTH	8" MIN.-12" MAX.
RAIL LENGTH	AS REQUIRED, SEE RAIL LENGTH TABLE
HEIGHT	5' MIN.
USE	TEMPORARY OR PERMANENT
STRIPES	SEE DETAIL OF BARRICADE STRIPING AND APPROPRIATE GENERAL NOTES.

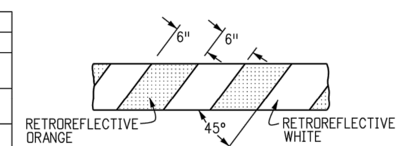

FOR RAILS LESS THAN 3' LONG, 4" WIDE STRIPES SHALL BE USED.

RAIL STRIPING DETAIL

GENERAL NOTES

1. THE VARIOUS TYPES, COMBINATIONS AND APPLICATIONS OF SIGNS AND WARNING LIGHTS FOR BARRICADES REQUIRED FOR EACH PROJECT SHALL BE:
   A. AS SPECIFIED OR DETAILED IN THE PLANS.
   B. AS SHOWN IN APPLICABLE TYPICAL ILLUSTRATIONS.
   C. AS CALLED FOR AND SUBJECT TO APPROVAL BY THE ENGINEER.
2. TEMPORARY AND PERMANENT BARRICADES TYPE 3 SHALL BE FABRICATED FROM APPROVED CRASH TESTED MATERIALS. SEE SECTION 614 AND 630 OF THE STANDARD SPECIFICATIONS FOR ROAD AND BRIDGE CONSTRUCTION FOR ADDITIONAL REQUIREMENTS.
3. ALL PAINTING SHALL CONFORM WITH THE FOLLOWING:
   A. THE APPLICABLE SECTION OF 508 OF THE STANDARD SPECIFICATIONS.
   B. ALL SKIDS, BRACES AND POSTS SHALL BE PAINTED WITH 2 COATS OF EXTERIOR WHITE PAINT
   C. THE BACKSIDES OF RAILS AND VERTICAL PANEL CHANNELIZING DEVICES FACING ONE DIRECTION OF TRAFFIC ONLY SHALL BE PAINTED WITH "EXTERIOR WHITE PAINT.
   D. ALUMINUM OR GALVANIZED STEEL SKIDS, BRACES AND POSTS SHALL NOT BE PAINTED.
4. ALL STRIPED SURFACES SHALL CONFORM WITH THE FOLLOWING:
   A. THE ENTIRE AREA OF ORANGE AND WHITE STRIPES SHALL BE FABRICATED AS ONE PIECE.
   B. HORIZONTAL RAILS, WING RAILS AND VERTICAL PANEL CHANNELIZING DEVICES SHALL HAVE ORANGE AND WHITE STRIPES ON THE FACE SIDE(S) SLANTING DOWNWARD AT A 45° ANGLE TOWARD THE SIDE(S) TO WHICH TRAFFIC IS TO PASS OR TURN.
   C. PERMANENT BARRICADES SHALL HAVE RETROREFLECTIVE RED AND WHITE STRIPES. THEY MAY BE USED AT LOCATIONS TO MARK THE END OF A ROAD, STREET OR HIGHWAY WHERE THERE IS NO CROSSROAD OR OUTLET. THEY SHALL NOT BE USED AT A "T" INTERSECTION.
   D. ALL RETROREFLECTIVE SHEETING SHALL CONFORM TO ASTM D4956:
      1. ORANGE AND WHITE SHALL BE TYPE II, III OR IV.
      2. RED AND WHITE SHALL BE TYPE II, III OR IV.
5. FOR ALL WOODEN BARRICADE COMPONENTS NOMINAL LUMBER DIMENSIONS ARE SATISFACTORY.
6. ALL SCREWS, BOLTS, NUTS AND WASHERS SHALL BE GALVANIZED OR CADMIUM PLATED.
7. STABILITY OF BARRICADES AND CHANNELIZING DEVICES SHALL CONFORM WITH THE FOLLOWING:
   A. SKIDS (BASES) OF MOVABLE BARRICADES SHALL BE WEIGHTED WITH SANDBAGS ONLY WHERE NECESSARY TO PROVIDE STABILITY
   B. NO MOVABLE OR PORTABLE DEVICE SHALL BE WEIGHTED BY ANY METHOD OR WITH ANY MATERIAL THAT WOULD MAKE THEM HAZARDOUS TO MOTORISTS.
8. WARNING LIGHTS USED WITH BARRICADES, DRUMS AND VERTICAL PANELS SHALL CONFORM WITH THE FOLLOWING:
   A. USE FLASHING WARNING LIGHTS WHEN DEVICES ARE USED SINGLY, AND STEADY BURN LIGHTS WHEN THEY ARE USED IN A SERIES FOR CHANNELIZATION.
   B. THEY SHALL BE POSITIONED ABOVE THE TOP RAIL OF BARRICADES OR ON TOP OF DRUMS AND VERTICAL PANELS.
9. CONCRETE BARRIER (TEMPORARY) SHALL CONFORM WITH:
   A. PRECAST CONCRETE BARRIER AS SHOWN ON COLORADO STANDARD PLAN M-606-14.
   B. BARRIER REFLECTORS SHALL BE INSTALLED THAT MEET THE REQUIREMENTS OF STANDARD TYPICAL DELINEATOR INSTALLATIONS, EXCEPT THE MAXIMUM SPACING SHALL BE 50', AND THEY WILL NOT BE PAID FOR BUT ARE INCLUDED IN THE COST OF THE BARRIER.
   C. CONCRETE BARRIER END TREATMENT SHALL BE IN ACCORDANCE WITH CLEAR ZONE CRITERIA, AND PLACED AS SHOWN ON THE PLANS.
10. SIGN PANELS MOUNTED ON BARRICADES WILL BE PAID FOR SEPARATELY.

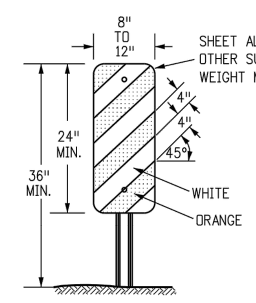

1. IF SPECIAL PANELS 3' OR GREATER IN HEIGHT ARE REQUIRED, THEN 6" STRIPES SHALL BE USED.
2. IF FIXED PLACEMENT IS REQUIRED, MOUNT ON DELINEATOR POST. SEE COLORADO STANDARD PLAN S-612-1.

TYPICAL VERTICAL PANEL

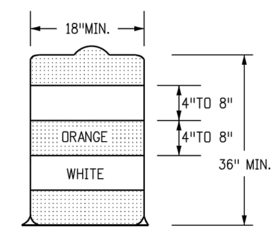

1. THE 18" MINIMUM DIMENSION SHALL APPLY TO THE SMALLEST MEASUREMENT OF OBLONG, RECTANGULAR, OR FLATTENED SIDE DRUMS.
2. THERE SHALL BE AT LEAST TWO ORANGE AND TWO WHITE HORIZONTAL, CIRCUMFERENTIAL, RETROREFLECTIVE STRIPES ON EACH DRUM.

TYPICAL DRUM

Computer File Information	
Creation Date: 07/04/12	Initials: JSW
Last Modification Date:	Initials:
Full Path: www.coloradodot.info/library/traffic/traffic-s-standard-plans	
Drawing File Name: S-630-02_1of1.dgn	
CAD Ver.: MicroStation V8 Scale: Not to Scale	Units: English

Sheet Revisions		
	Date:	Comments
(R-X)		
(R-X)		
(R-X)		
(R-X)		

Colorado Department of Transportation
4201 East Arkansas Avenue
Denver, Colorado 80222
Phone: (303) 757-9543
Fax: (303) 757-9219
Safety & Traffic Engineering Branch KCM/JSW

BARRICADES, DRUMS, CONCRETE BARRIERS (TEMP) & VERTICAL PANELS

Issued By: Safety & Traffic Engineering Branch July 4, 2012

STANDARD PLAN NO. S-630-2

Sheet No. 1 of 1

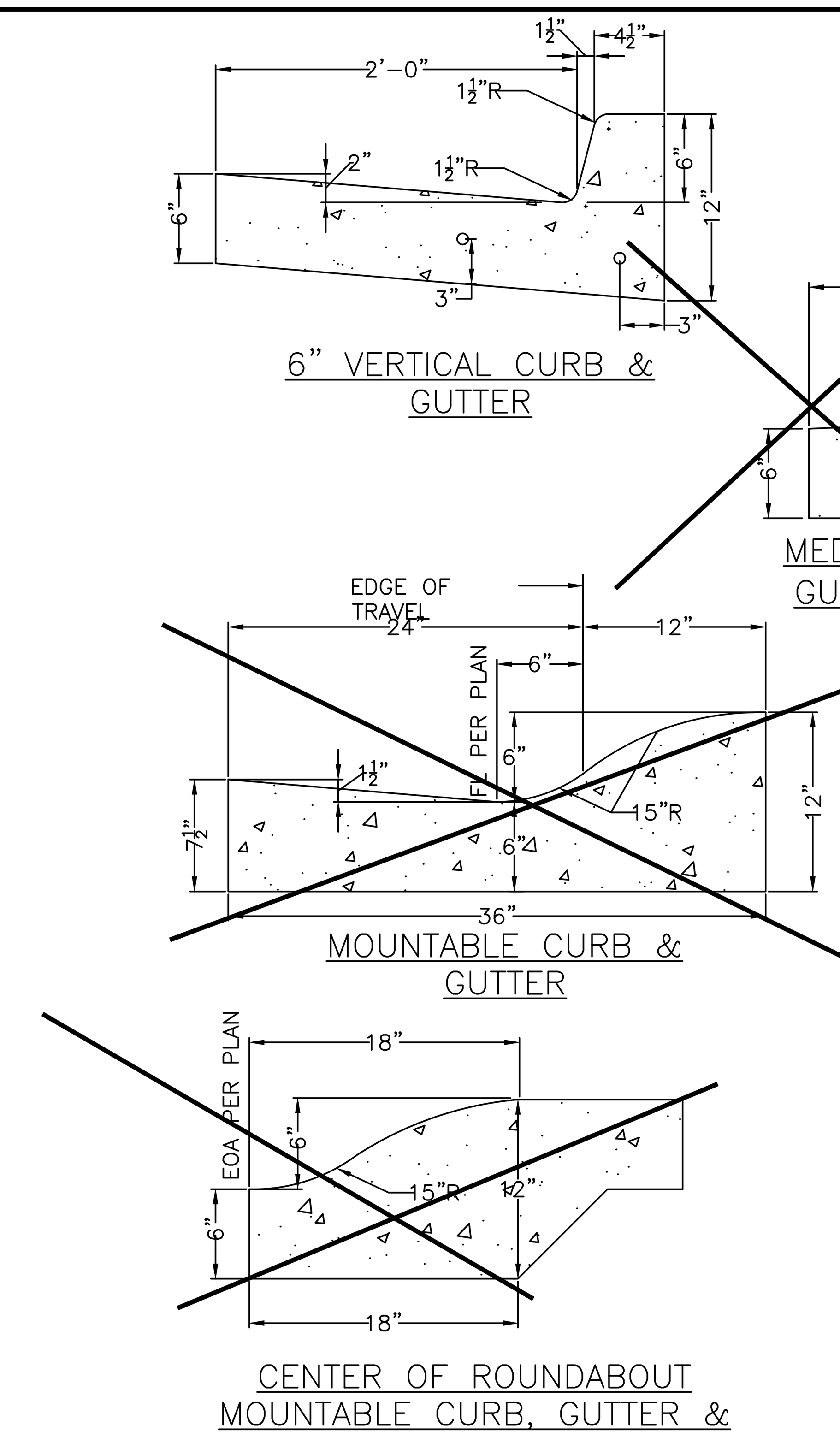

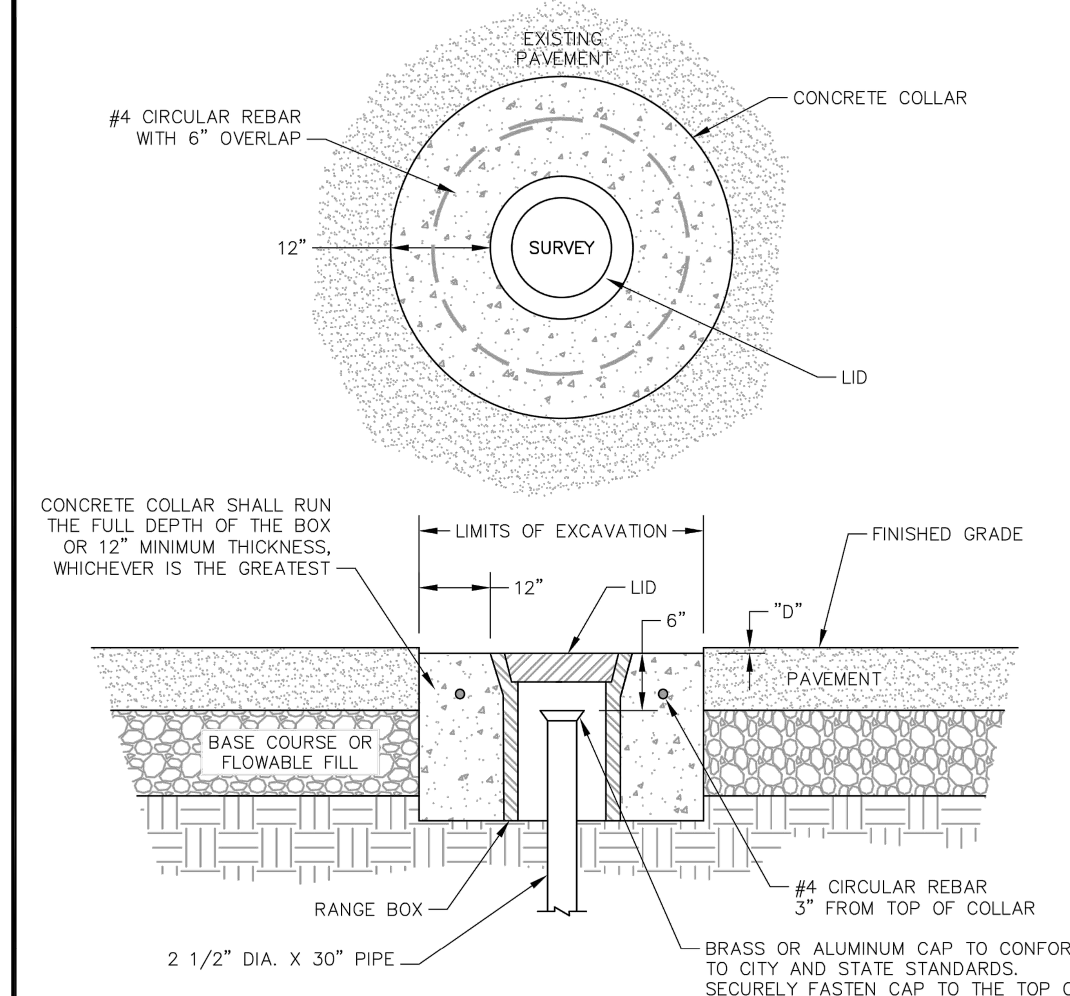

NOTES:

1. "D" = 1/2" FOR HOT MIX ASPHALT PAVEMENT OVERLAYS, SURFACE TREATMENTS, PAVEMENT RECONSTRUCTION OR NEW CONSTRUCTION.
2. "D" = 1/4" FOR CONCRETE STREETS.
3. THIS MONUMENT TO BE INSTALLED AT ALL ALIQUOT CORNERS.
4. SURVEY MONUMENTS SHALL CONFORM TO ALL LAND SURVEYING REQUIREMENTS AS DETERMINED BY CITY AND STATE STANDARDS.
5. RANGE BOX, CAP AND MONUMENT PIPE TO BE PURCHASED FROM THE CITY OF GREELEY.

SURVEY MONUMENT IN PAVEMENT

DETAIL NO. S-32

DATE: JULY, 2015 SCALE: N.T.S.

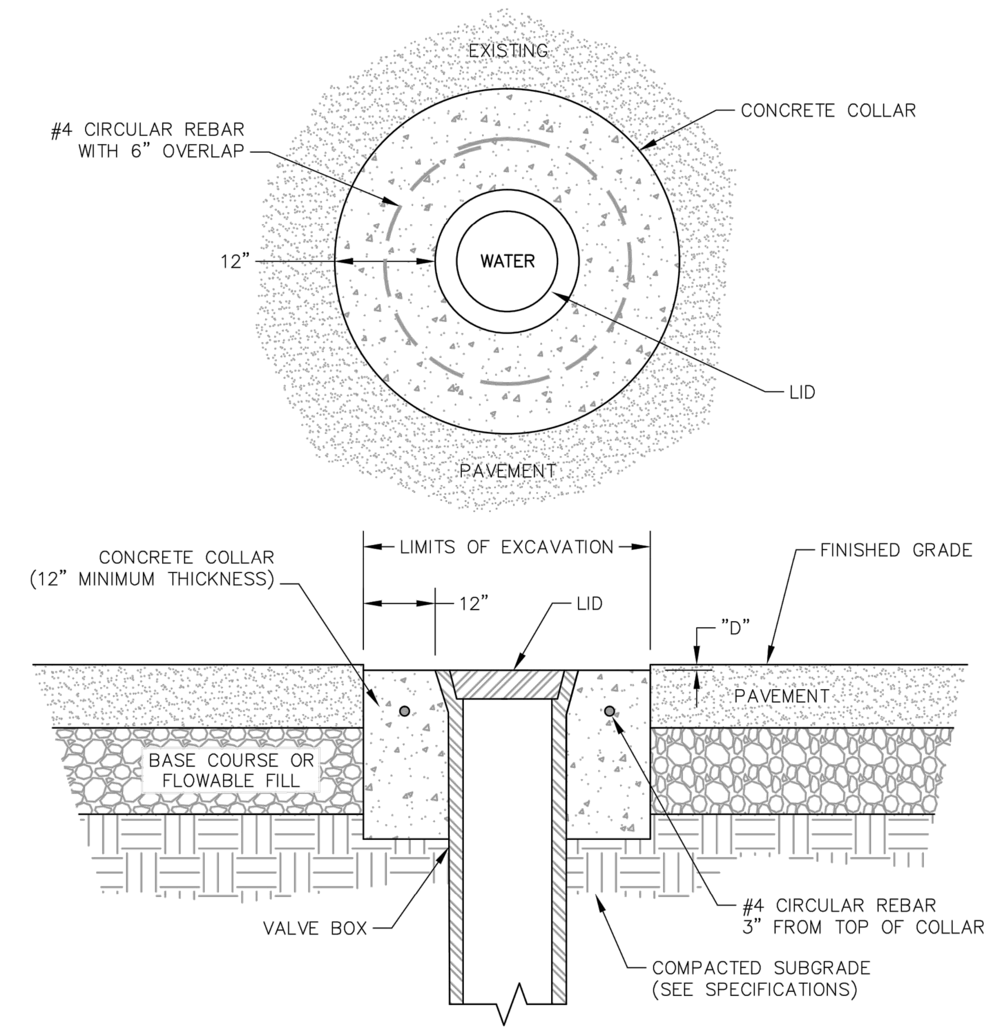

NOTES:

1. "D" = 1/4" FOR HOT MIX ASPHALT PAVEMENT OVERLAYS, SURFACE TREATMENTS, PAVEMENT RECONSTRUCTION OR NEW CONSTRUCTION.
2. "D" = 1/4" FOR CONCRETE STREETS.
3. VALVE BOX MUST BE PLUMB AND CENTERED OVER THE VALVE NUT.
4. THIS DETAIL APPLIES TO BOTH ASPHALT AND CONCRETE STREETS.

WATER VALVE DETAIL FOR RAISING TO FINISHED GRADE

DETAIL NO. S-33

DATE: JULY, 2015 SCALE: N.T.S.

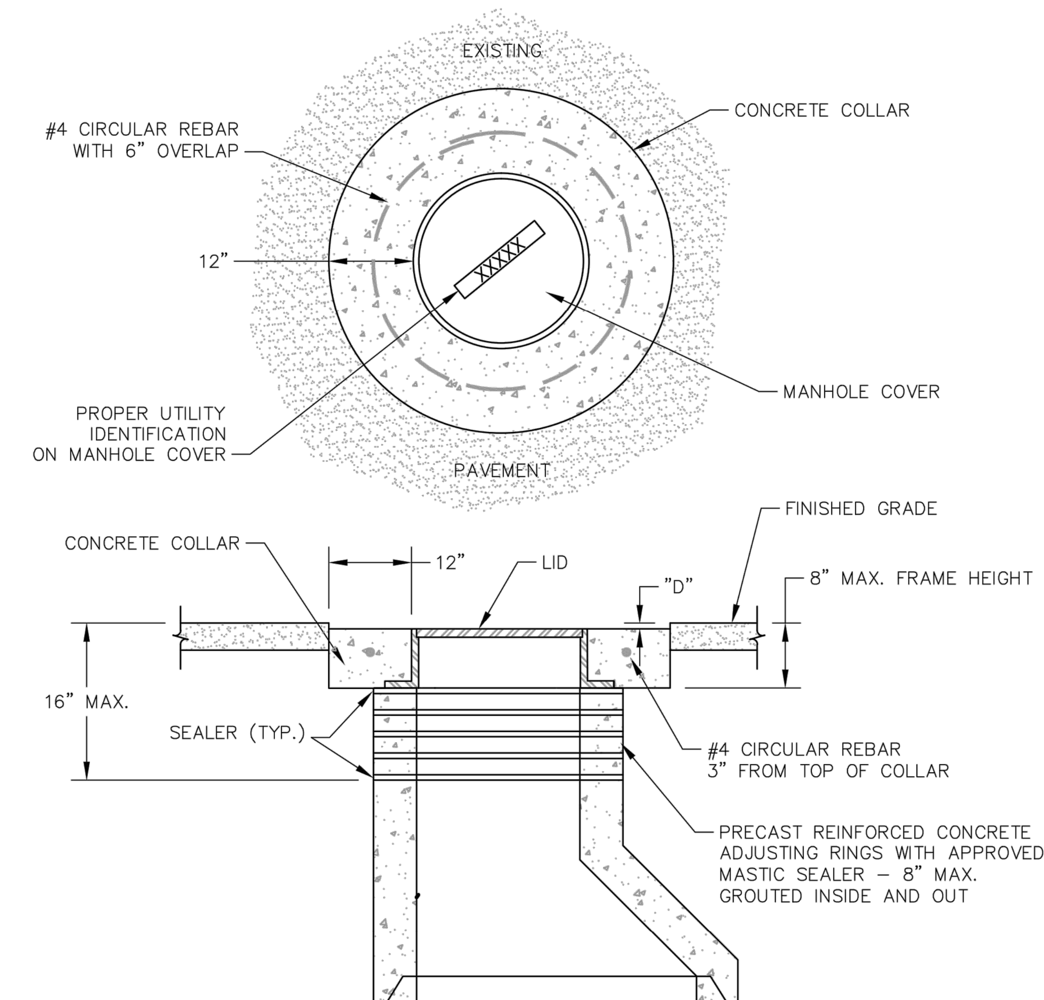

NOTES:

1. "D" = 1/4" FOR HOT MIX ASPHALT PAVEMENT OVERLAYS, SURFACE TREATMENTS, PAVEMENT RECONSTRUCTION OR NEW CONSTRUCTION.
2. "D" = 1/4" FOR CONCRETE STREETS.
3. A SEALER SHALL BE USED BETWEEN ALL ADJUSTING RINGS AS REQUIRED.
4. DROP–IN RISER RINGS NOT ALLOWED.
5. SET AND TILT RING AND COVER TO MATCH SLOPE OF FINISHED STREET.

MANHOLE RAISING DETAIL

DETAIL NO. S-34

DATE: JULY, 2015 SCALE: N.T.S.

NOTES:

1. HIGHWAY FONT SERIES D OR APPROVED EQUIVALENT SHALL BE USED FOR NUMERALS.
2. HIGHWAY FONT SERIES C OR APPROVED EQUIVALENT SHALL BE USED FOR LETTERING. IN SOME CASES THE LETTER SERIES MAY VARY DEPENDING ON NUMBER OF LETTERS OR NUMBERS IN THE STREET NAME.
3. STROKE WIDTH OF LETTERS SHOWN ON THIS DRAWING IS FOR ILLUSTRATIVE PURPOSE ONLY AND IS NOT INTENDED TO REPRESENT CORRECT STROKE WIDTH FOR SPECIFIED LETTER SERIES OR LETTER TO LETTER SPACING.

STREET NAME SIGN LAYOUT
D3

DETAIL NO. S-35

DATE: JULY, 2015 SCALE: N.T.S.

FRONT VIEW

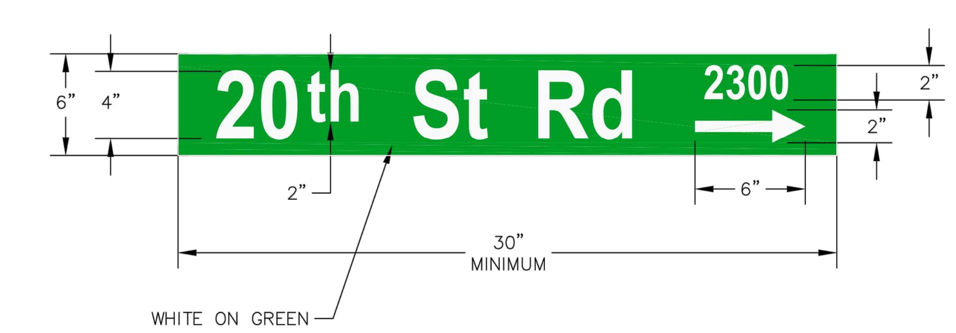

REAR VIEW

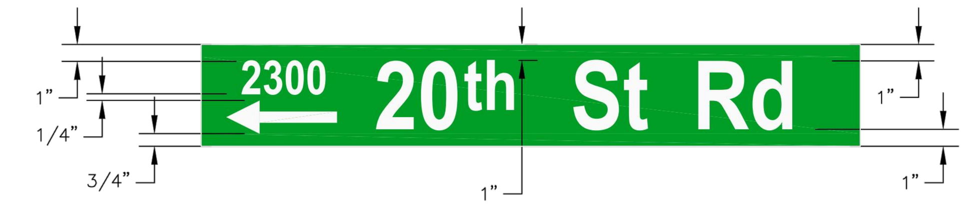

NOTES:

1. HIGHWAY FONT SERIES D OR APPROVED EQUIVALENT SHALL BE USED FOR NUMERALS.
2. HIGHWAY FONT SERIES C OR APPROVED EQUIVALENT SHALL BE USED FOR LETTERING. IN SOME CASES THE LETTER SERIES MAY VARY DEPENDING ON NUMBER OF LETTERS OR NUMBERS IN THE STREET NAME.
3. STROKE WIDTH OF LETTERS SHOWN ON THIS DRAWING IS FOR ILLUSTRATIVE PURPOSE ONLY AND IS NOT INTENDED TO REPRESENT CORRECT STROKE WIDTH FOR SPECIFIED LETTER SERIES OR LETTER TO LETTER SPACING.

STREET NAME SIGN
D3

DETAIL NO. S-37

DATE: JULY, 2015 SCALE: N.T.S.

127 S. DENVER AVE
FT. LUPTON, CO 80621
www.westerneci.com
email@westerneci.com
(720) 685-9951
FAX (720) 294-1330
Western Engineering Consultants, inc LLC

No.	REVISION	DATE	BY
0	PRELIM/FINAL PLAT SUBMITTAL	08/06/19	CFC

KEENE LAND, LLC,
CONTACT: RICK ROBERTSON
8537 WCR 51
KEENESBURG, CO 80643
(303)961-0031

CDOT & MISCELLAIOUS DETAILS
MARKET STREET BUSINESS PARK SUBDIVISION
TOWN of KEENESBURG, WELD COUNTY, COLORADO

Dig Safely.
CALL UNCC
THREE WORKING DAYS BEFORE YOU DIG
811
www.uncc.org
UTILITY NOTIFICATION CENTER OF COLORADO

COLORADO REGISTERED CHADWIN F. COX FOR 33802 REVIEW ONLY 08/06/19 PROFESSIONAL ENGINEER
ONLY VALID FOR CONSTRUCTION IF SEAL & ORIGINAL SIGNATURE ARE ON EACH SHEET

INITIAL PLAN RELEASE: 08/06/19
DESIGNED BY: CFC
DRAWN BY: CFC
CHECKED BY: CFC

PROJECT NO. 01-0187.003.00

DOC CON # C5.02-DETAILS

SHT C5.02

T:\0187_003_00-KEENE LAND-MARKET BUS PARK\Dwg\CD\s\0187_003-WECI-CDS-5.00.dwg, C5.02-CDOTDTLS, 8/16/2019 6:21:19 PM, _DWG To PDF.pc3, WEC 24"36, WEC 24"36

PAVEMENT MARKING WORDS

TYPICAL LETTER MEASUREMENTS

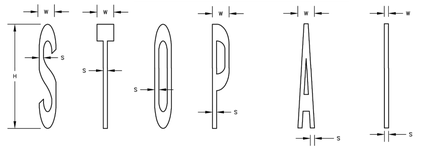

H = HEIGHT	H = 10'	H = 8'	H = 4'
W = WIDTH	W = 1'-7.3" TO 20'	W = 1'-3.4" TO 1'-4"	W = 7.7" TO 8"
S = STROKE	S = 4.8' TO 5'	S = 3.8" TO 4"	S = 1.9" TO 2"
GENERAL GUIDELINES FOR LETTER SIZE:	UTILIZE 10' LETTERS WHEN MARKING ACROSS 2 TRAFFIC LANES	UTILIZE 8' LETTERS WHEN MARKING ACROSS 1 TRAFFIC LANE	UTILIZE 4' LETTERS WHEN MARKING ACROSS SIDEWALK OR BIKE LANE

TYPICAL LETTER SPACING

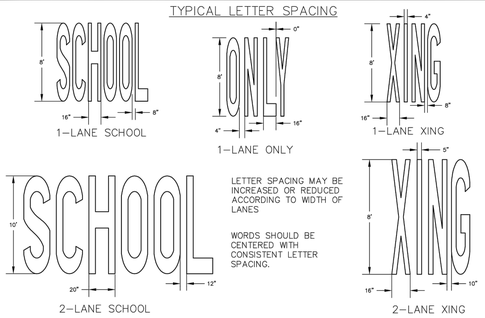

LETTER SPACING MAY BE INCREASED OR REDUCED ACCORDING TO WIDTH OF LANES

WORDS SHOULD BE CENTERED WITH CONSISTENT LETTER SPACING.

TYPICAL PAVEMENT MARKINGS
SHEET 1 OF 3
DETAIL NO. S-38
DATE: JULY, 2015 SCALE: N.T.S.

PAVEMENT MARKING SYMBOLS

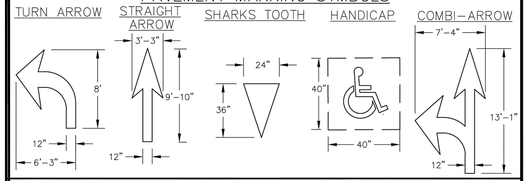

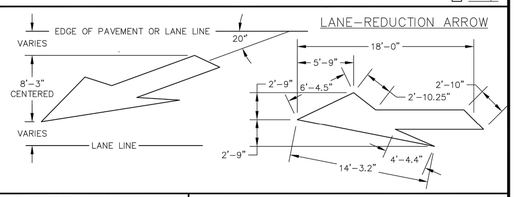

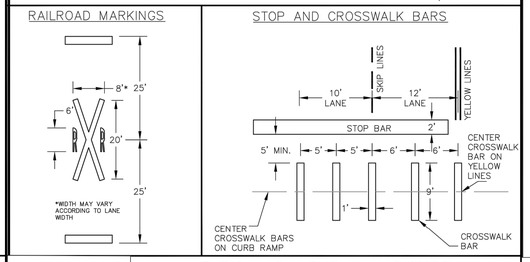

TYPICAL PAVEMENT MARKINGS
SHEET 2 OF 3
DETAIL NO. S-38
DATE: JULY, 2015 SCALE: N.T.S.

BICYCLE PAVEMENT MARKINGS

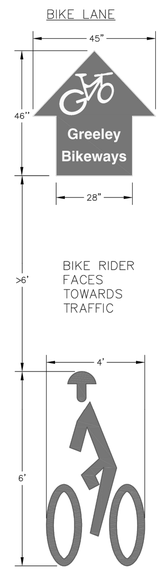

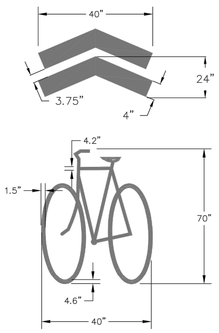

TYPICAL PAVEMENT MARKINGS
SHEET 3 OF 3
DETAIL NO. S-38
DATE: JULY, 2015 SCALE: N.T.S.

PAVEMENT MARKING WORDS AND SYMBOLS

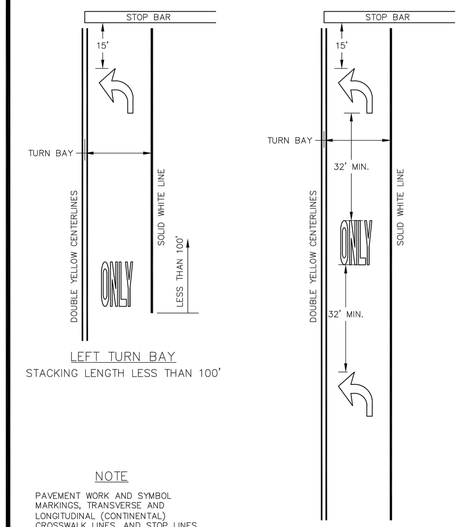

LEFT TURN BAY
STACKING LENGTH LESS THAN 100'

LEFT TURN BAY
STACKING LENGTH OVER 100'

NOTE

PAVEMENT WORK AND SYMBOL MARKINGS, TRANSVERSE AND LONGITUDINAL (CONTINENTAL) CROSSWALK LINES, AND STOP LINES WILL BE PAID FOR IN SQUARE FEET USING THEIR SPECIFIC BID ITEMS.

LEFT TURN BAY PAVEMENT MARKINGS
DETAIL NO. S-39
DATE: JULY, 2015 SCALE: N.T.S.

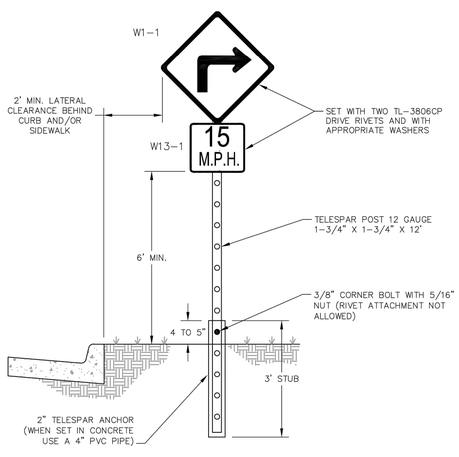

NOTES:

1. SIGN SHOULD BE SET AT AN ANGLE OF 90° AND VISIBLE TO APPROACHING TRAFFIC.
2. ALL SIGNS SHALL MEET THE MOST CURRENT MUTCD STANDARDS.

TYPICAL DIAMOND SIGN INSTALLATION
DETAIL NO. S-43
DATE: JULY, 2015 SCALE: N.T.S.

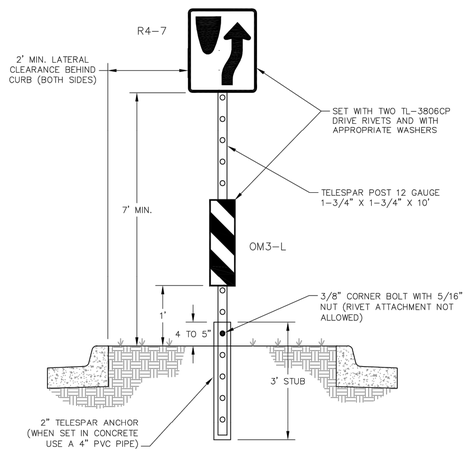

NOTES:

1. SIGN SHOULD BE SET AT AN ANGLE OF 90° INSIDE NOSE OF ISLAND AND VISIBLE TO APPROACHING TRAFFIC.
2. ALL SIGNS SHALL MEET THE MOST CURRENT MUTCD STANDARDS.

TYPICAL ISLAND SIGN INSTALLATION
DETAIL NO. S-44
DATE: JULY, 2015 SCALE: N.T.S.

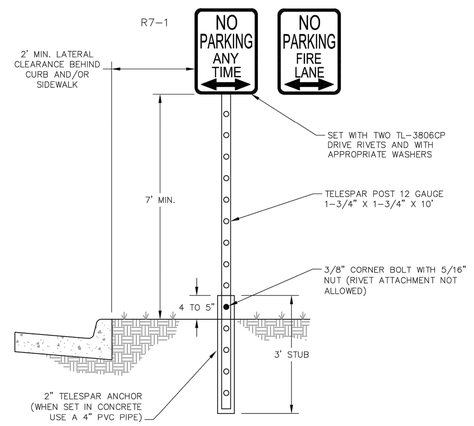

NOTES:

1. SIGN SHOULD BE SET AT AN ANGLE OF NOT LESS THAN 30°, OR MORE THAN 45°, WITH THE LINE OF TRAFFIC FLOW TO BE VISIBLE TO APPROACHING TRAFFIC.
2. ALL SIGNS SHALL MEET THE MOST CURRENT MUTCD STANDARDS.

TYPICAL NO PARKING SIGN INSTALLATION
DETAIL NO. S-45
DATE: JULY, 2015 SCALE: N.T.S.

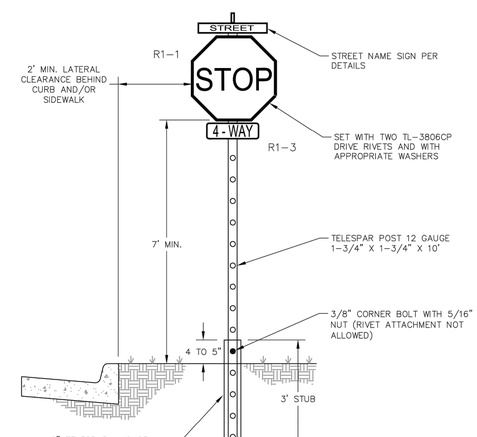

NOTES:

1. SIGN SHOULD BE SET AT AN ANGLE OF 90° AND BE VISIBLE TO APPROACHING TRAFFIC.
2. ALL SIGNS SHALL MEET THE MOST CURRENT MUTCD STANDARDS.

TYPICAL STOP SIGN INSTALLATION
DETAIL NO. S-46
DATE: JULY, 2015 SCALE: N.T.S.

127 S. DENVER AVE
FT. LUPTON, CO 80621
www.westernec.com
email@westernec.com
(720) 685-9951
FAX (720) 294-1330
Western Engineering Consultants, inc LLC

No.	REVISION	DATE	BY
0	PRELIM/FINAL PLAT SUBMITTAL	08/06/19	CFC

KEENE LAND LLC
CONTACT: RICK ROBERTSON
8537 WCR 43
KEENESBURG, CO 80643
(303)961-0031

SIGN DETAILS
MARKET STREET BUSINESS PARK SUBDIVISION
TOWN of KEENESBURG, WELD COUNTY, COLORADO

Dig Safely.
CALL UNCC
THREE WORKING DAYS BEFORE YOU DIG
811
www.uncc.org
UTILITY NOTIFICATION CENTER OF COLORADO

COLORADO REGISTERED PROFESSIONAL ENGINEER
CHRISTIN P. CAMPBELL
FOR
33802
PRELIMINARY REVIEW ONLY
08/06/19
ONLY VALID FOR CONSTRUCTION IF SEAL & ORIGINAL SIGNATURE ARE ON EACH SHEET

INITIAL PLAN RELEASE: 08/06/19
DESIGNED BY: CFC
DRAWN BY: CFC
CHECKED BY: CFC
PROJECT NO. 01-0187.003.00
DOC CON # C5.03-DETAILS
SHT C5.03

T:\0187_003_00-KEENE LAND-MARKET BUS PARK\Dwg\CDs\0187_003-WEC\-CDS-5.00.dwg, C5.03-CDDTDTLS, 8/16/2019 6:21:24 PM, DWG To PDF.pc3, WEC 24"36, WEC 24"36

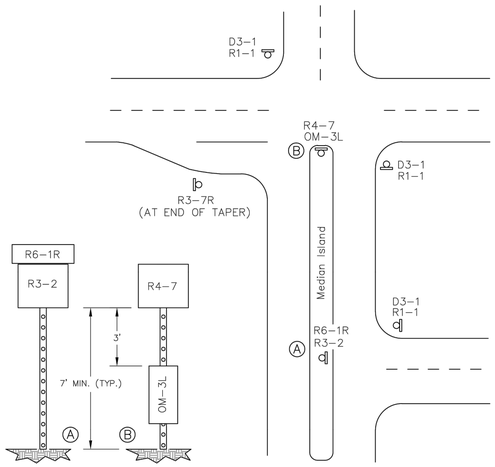

EXAMPLES

LEGEND:

R1-1 STOP SIGN
R3-2 NO LEFT TURN SYMBOL
R6-1R ONE-WAY ARROW RIGHT
OM-3L RIGHT BRIDGEBOARD
D3-1 STREET/AVENUE SIGN
R3-7R RIGHT LANE MUST TURN RIGHT
R4-7 KEEP RIGHT OF ISLAND SYMBOL

NOTE:

THIS IS A GENERAL LAYOUT. SIGNS SHALL BE INSTALLED AT EXACT LOCATIONS PER PLANS AND WITH MATERIALS PER STANDARD SPECIFICATIONS..

TYPICAL STREET SIGN PLACEMENT

DETAIL NO. S-47

DATE: JULY, 2015 SCALE: N.T.S.

127 S. DENVER AVE
FT. LUPTON, CO 80621
www.westernec1.com
email@westernec1.com
(720) 685-9951
FAX (720) 294-1330
Western Engineering Consultants, inc LLC

No.	REVISION	DATE	BY
0	PRELIM/FINAL PLAT SUBMITTAL	08/06/19	CFC

KEENE LAND LLC
CONTACT: RICK ROBERTSON
8537 WCR 5
KEENESBURG, CO 80643
(303)961-0031

SIGN DETAILS
MARKET STREET BUSINESS PARK SUBDIVISION
TOWN of KEENESBURG, WELD COUNTY, COLORADO

Dig Safely.
CALL UNCC
THREE WORKING DAYS BEFORE YOU DIG
811
www.uncc.org
UTILITY NOTIFICATION CENTER OF COLORADO

COLORADO REGISTERED PROFESSIONAL ENGINEER
CHRISTIN P. CORY
FOR
33802
REVIEW ONLY
08/06/19
ONLY VALID FOR CONSTRUCTION IF SEAL & ORIGINAL SIGNATURE ARE ON EACH SHEET

INITIAL PLAN RELEASE: 08/06/19
DESIGNED BY: CFC
DRAWN BY: CFC
CHECKED BY: CFC

PROJECT NO. 01-0187.003.00
DOC CON # C5.04-DETAILS
SHT C5.04

T:\0187_003_00-KEENE LAND-MARKET BUS PARK\Dwg\CDs\0187_003-WEC1-CDS-5.00.dwg, C5.04-CDDTDTLS, 8/16/2019 6:21:28 PM, _DWG To PDF.pc3, WEC 24"36, WEC 24"36

INITIAL

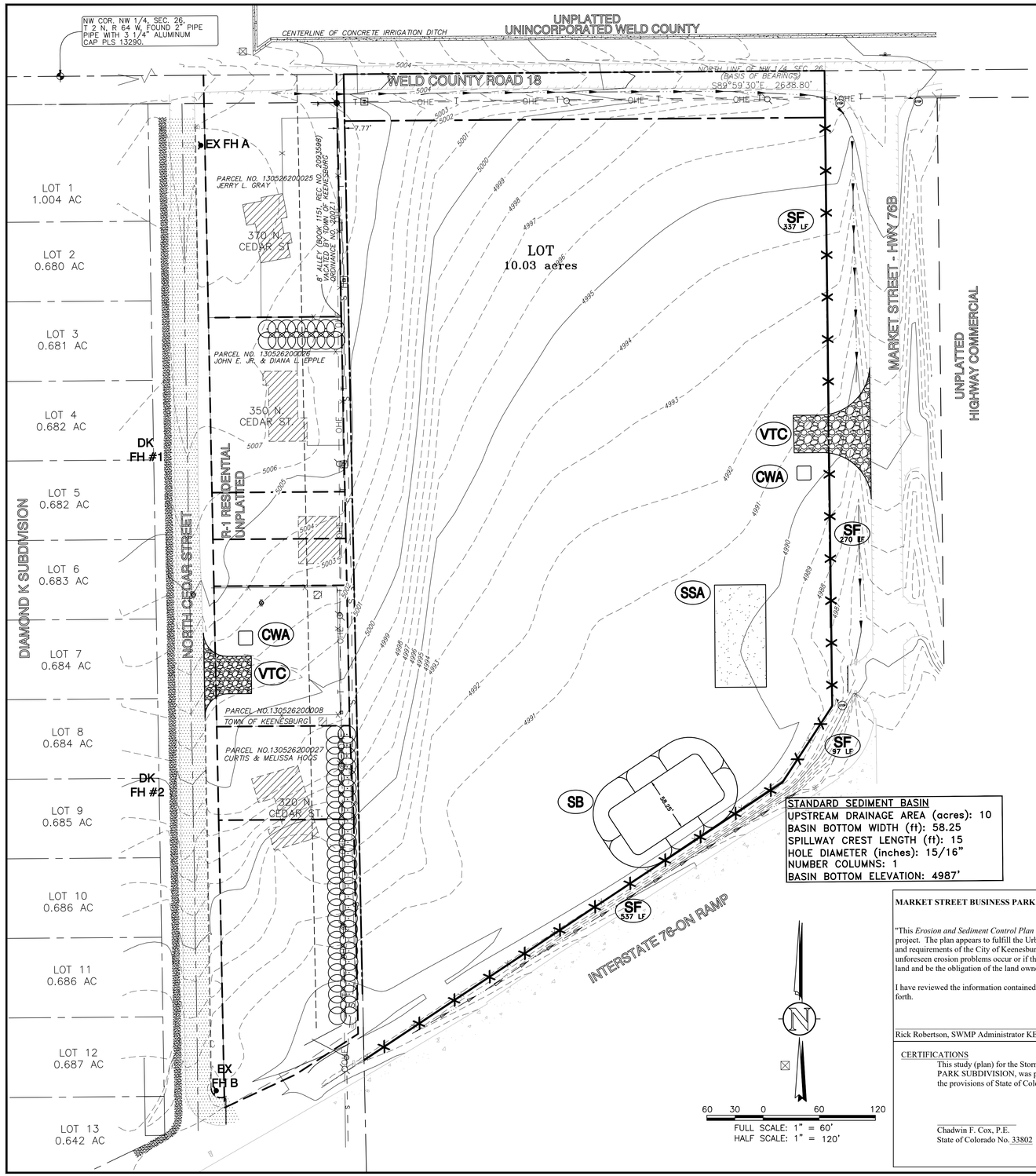

STANDARD SEDIMENT BASIN
UPSTREAM DRAINAGE AREA (acres): 10
BASIN BOTTOM WIDTH (ft): 58.25
SPILLWAY CREST LENGTH (ft): 15
HOLE DIAMETER (inches): 15/16"
NUMBER COLUMNS: 1
BASIN BOTTOM ELEVATION: 4987'

MARKET STREET BUSINESS PARK SUBDIVISION Erosion Control Signature Sheet

"This *Erosion and Sediment Control Plan* has been placed in the MARKET STREET BUSINESS PARK SUBDIVISION file for this project. The plan appears to fulfill the Urban Drainage and Flood Control District's technical criteria and the criteria for erosion control and requirements of the City of Keenesburg and State of Colorado. I understand that additional erosion control measure may be needed if unforeseen erosion problems occur or if the submitted plan does not function as intended. The requirements of this plan shall run with the land and be the obligation of the land owner until such time as the plan is properly completed, modified or voided."

I have reviewed the information contained within the Erosion and Sediment Control Plan and accept responsibility for the requirements set forth.

Rick Robertson, SWMP Administrator KEENE LAND Rough Grading

CERTIFICATIONS

This study (plan) for the Storm Water Management Plan for MARKET STREET BUSINESS PARK SUBDIVISION, was prepared by me (or under my direct supervision) in accordance with the provisions of State of Colorado and designed to comply with the provisions thereof.

Chadwin F. Cox, P.E.
State of Colorado No. 33802

BMP LEGEND

CWA	CONCRETE WASHOUT AREA
CF	CONSTRUCTION FENCE
CM	CONSTRUCTION MARKER
CIP	CULVERT INLET PROTECTION
DC	WIND EROSION & DUST CONTROL
DS	DRAINAGE SWALE
GH	GOOD HOUSEKEEPING PRACTICE
IP	INLET PROTECTION
PS	PERMANENT SEEDING
RS	ROCK SOCK
SB	SEDIMENT BASIN
SCL	SEDIMENT CONTROL LOG
SF	SILT FENCE
SS	STREET SWEEPING VACUMMING
SSA	STABILIZED STAGING AREA
SP	STOCK PILE
TOP	TEMPORARY OUTLET PROTECTION
VB	VEGETATED BUFFER
VTC	VEHICLE TRACKING CONTROL

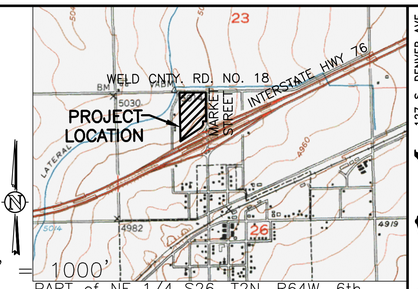

PART of NE 1/4 S26, T2N, R64W, 6th PM
SHOWN VICINITY MAP TAKEN FROM USGS QUAD – KEENESBURG 40104–A5

NOTES

THIS PLAN IS INTENDED AS THE INITIAL EROSION CONTROL PLAN FOR MARKET STREET BUSINESS PARK SUBDIVISION.

ALL IMPROVEMENTS ARE PROPOSED UNLESS NOTED AS EXISTING.

IT IS THE OWNER AND/OR THE CONTRACTOR'S RESPONSIBILITY TO ATTAIN ALL APPROPRIATE PERMITS AND REVIEW APPROVALS FROM THE STATE OF COLORADO AND CITY OF BRIGHTON RESPECTIVELY.

SEE "AS BUILT/BOUNDARY SURVEY" COMPLETED BY AMERICAN WEST LAND SURVEY – DATED MAY 24, 2006.

SEE COVER FOR PROJECT BENCHMARK AND BASIS OF BEARING.

SITE BENCHMARK WAS ESTABLISHED BEING A 3" BRASS CAP IN CONCRETE LYING FIVE FEET WEST OF A CONCRETE IRRIGATION DITCH NEAR THE INTERSECTION OF COUNTY ROAD 18 AND NORTH CEDAR STREET, AND THIRTY FEET NORTH OF THE CENTERLINE OF COUNTY ROAD 18. STAMPED "NATIONAL GEODETIC SURVEY ACD 1" HAVING AN ELEVATION OF 5008.06 FEET (NAVD 1988)

ANY REFERENCE TO EASEMENTS, SURVEY POINTS, OR EXISTING UTILITIES AND FEATURES ARE BASED SOLELY FROM SURVEY INFORMATION PROVIDED BY OTHERS – SPECIFICALLY PER SAME SURVEY NOTED ABOVE.

NOT ALL UNCC UTILITY LOCATES HAVE BEEN PERFORMED. IT IS THE CONTRACTOR'S RESPONSIBILITY TO VERIFY ALL UTILITIES ARE LOCATED AND SURVEY PROVIDED TO THE OWNER AND ENGINEER PRIOR TO CONSTRUCTION DRAWING RELEASE.

SIZES OF EXISTING UTILITIES AS TAKEN FROM 'CITY OF BRIGHTON WATER AND SEWER MAPS DATED JUNE 2004.

SYMBOL LEGEND

45 DEG BEND
22.5 DEG BEND
RESTRAINED PLUG
RESTRAINED TEE
WATER METER
RESTRAINED CROSS
FIRE HYDRANT
RESTRAINED WATER VALVE
PIPE CROSSOVER
MANHOLE
PARKING STALL COUNT

LINETYPE LEGEND

LOT / PROPERTY LINE
RIGHT OF WAY LINE
EASEMENT
TO BE ABANDONED LOT LINE
EXISTING BUILDING, CURB
EDGE of ASPHALT
CHAINLINK FENCE
WIRE FENCE
POND WQ W/S
SWALE
EXISTING OVERHEAD ELEC
EXISTING ELECTICAL LINE
EXISTING STORM LINE
EXISTING SANITARY LINE
EXISTING WATER LINE
EXISTING GAS LINE
EXISTING FIBER OPTIC LINE
EXISTING TELEPHONE LINE
PROPOSED SANITARY LINE
PROPOSED SANITARY SERVICE
PROPOSED STORM LINE
PROPOSED WATER LINE
PROPOSED WATER SERVICE
PROPOSED GAS LINE
PROPOSED ELECTRIC LINE
PROPOSED TELEPHONE LINE

127 S. DENVER AVE
FT. LUPTON, CO 80621
www.westernec.com
email@westernec.com
(720) 685-9951
FAX (720) 294-1330
Western Engineering Consultants, inc LLC

No.	REVISION	DATE	BY
0	PRELIM/FINAL PLAT SUBMITTAL	08/06/19	CFC

KEENE LAND LLC
CONTACT: RICK ROBERTSON
83 W 5th
KEENESBURG, CO 80643
(303)961-0031

INITIAL EROSION CONTROL PLAN
MARKET STREET BUSINESS PARK SUBDIVISION
TOWN of KEENESBURG, WELD COUNTY, COLORADO

Dig Safely.
CALL UNCC
THREE WORKING DAYS BEFORE YOU DIG
811
WWW.UNCC.ORG
UTILITY NOTIFICATION CENTER OF COLORADO

COLORADO REGISTERED PROFESSIONAL ENGINEER
CHADWIN F. COX
FOR 33802
REVIEW ONLY
08/06/19
ONLY VALID WHEN CONSTRUCTION IF SEAL W/ ORIGINAL SIGNATURE ARE ON EACH SHEET

INITIAL PLAN RELEASE:08/06/19
DESIGNED BY: CFC
DRAWN BY: CFC
CHECKED BY: CFC
PROJECT NO. 01-0187.003.00
DOC CON # C6.00-INIEC
SHT C6.00

T:\0187_003_00-KEENE LAND-MARKET BUS PARK\Dwg\CDs\0187_003-WECI-CDS-6.00.dwg, C6.00-INI EEC, 8/16/2019 11:52:24 AM, _DWG To PDF.pc3, WEC 24'36, WEC 24'36

INTERIM

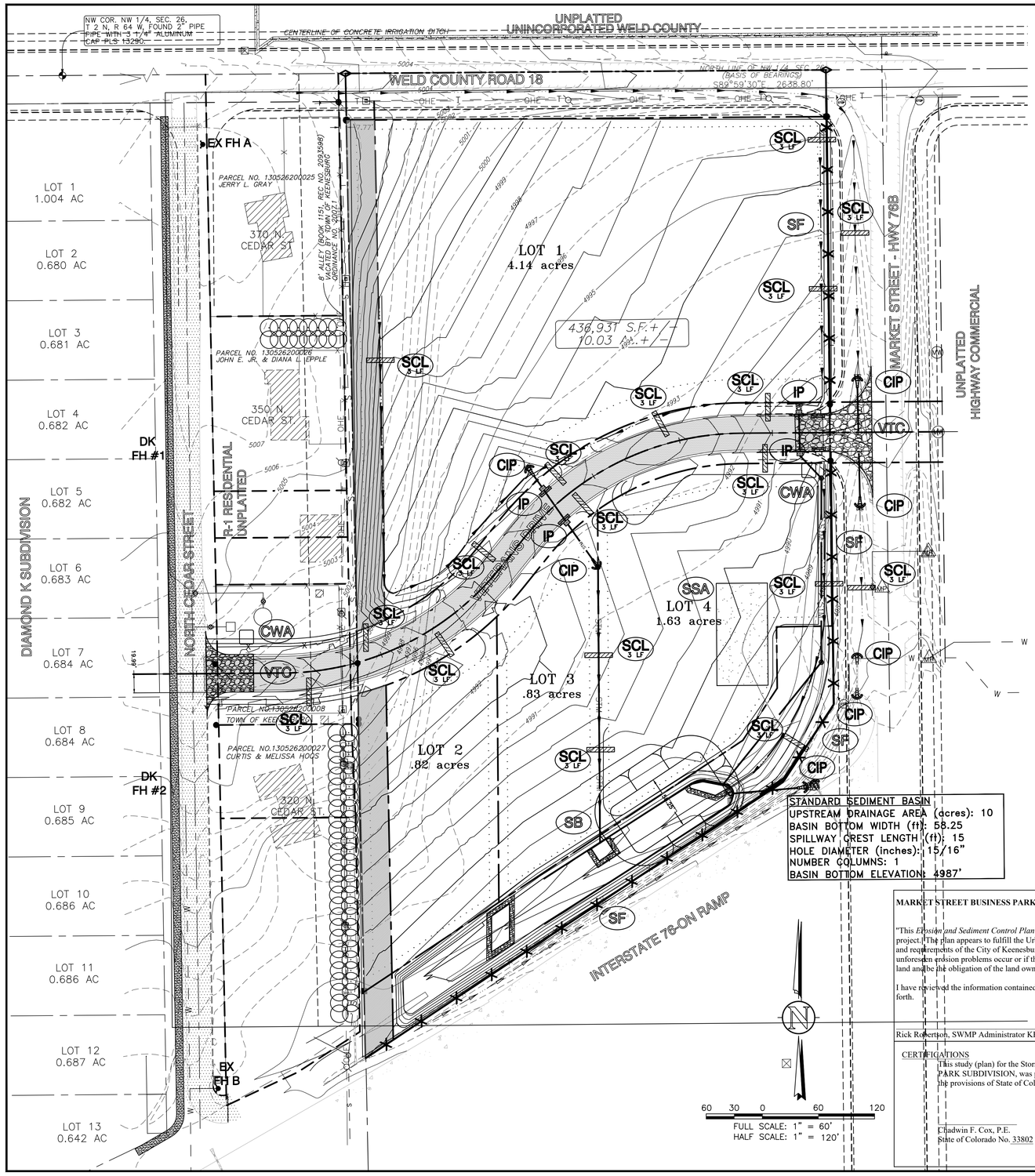

STANDARD SEDIMENT BASIN
UPSTREAM DRAINAGE AREA (acres): 10
BASIN BOTTOM WIDTH (ft): 58.25
SPILLWAY CREST LENGTH (ft): 15
HOLE DIAMETER (inches): 15/16"
NUMBER COLUMNS: 1
BASIN BOTTOM ELEVATION: 4987'

BMP LEGEND

CWA	CONCRETE WASHOUT AREA
CF	CONSTRUCTION FENCE
CM	CONSTRUCTION MARKER
CIP	CULVERT INLET PROTECTION
DC	WIND EROSION & DUST CONTROL
DS	DRAINAGE SWALE
GH	GOOD HOUSEKEEPING PRACTICE
IP	INLET PROTECTION
PS	PERMANENT SEEDING
RS	ROCK SOCK
SB	SEDIMENT BASIN
SCL	SEDIMENT CONTROL LOG
SF	SILT FENCE
SS	STREET SWEEPING VACUMMING
SSA	STABILIZED STAGING AREA
SP	STOCK PILE
TOP	TEMPORARY OUTLET PROTECTION
VB	VEGETATED BUFFER
VTC	VEHICLE TRACKING CONTROL

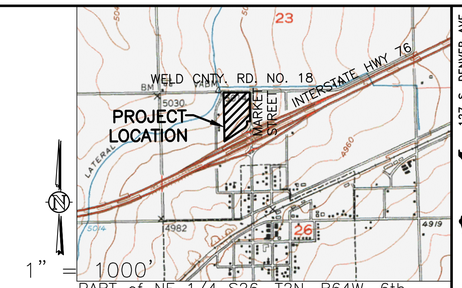

1" = 1000'
PART of NE 1/4 S26, T2N, R64W, 6th PM
SHOWN VICINITY MAP TAKEN FROM USGS QUAD – KEENESBURG 40104–A5

NOTES

THIS PLAN IS INTENDED AS THE INTERIM EROSION CONTROL PLAN FOR MARKET STREET BUSINESS PARK SUBDIVISION.

ALL IMPROVEMENTS ARE PROPOSED UNLESS NOTED AS EXISTING.

IT IS THE OWNER AND/OR THE CONTRACTOR'S RESPONSIBILITY TO ATTAIN ALL APPROPRIATE PERMITS AND REVIEW APPROVALS FROM THE STATE OF COLORADO AND CITY OF BRIGHTON RESPECTIVELY.

SEE "AS BUILT/BOUNDARY SURVEY" COMPLETED BY AMERICAN WEST LAND SURVEY – DATED MAY 24, 2006.

SEE COVER FOR PROJECT BENCHMARK AND BASIS OF BEARING.

SITE BENCHMARK WAS ESTABLISHED BEING A 3" BRASS CAP IN CONCRETE LYING FIVE FEET WEST OF A CONCRETE IRRIGATION DITCH NEAR THE INTERSECTION OF COUNTY ROAD 18 AND NORTH CEDAR STREET, AND THIRTY FEET NORTH OF THE CENTERLINE OF COUNTY ROAD 18. STAMPED "NATIONAL GEODETIC SURVEY ACD 1" HAVING AN ELEVATION OF 5008.06 FEET (NAVD 1988)

ANY REFERENCE TO EASEMENTS, SURVEY POINTS, OR EXISTING UTILITIES AND FEATURES ARE BASED SOLELY FROM SURVEY INFORMATION PROVIDED BY OTHERS – SPECIFICALLY PER SAME SURVEY NOTED ABOVE.

NOT ALL UNCC UTILITY LOCATES HAVE BEEN PERFORMED. IT IS THE CONTRACTOR'S RESPONSIBILITY TO VERIFY ALL UTILITIES ARE LOCATED AND SURVEY PROVIDED TO THE OWNER AND ENGINEER PRIOR TO CONSTRUCTION DRAWING RELEASE.

SIZES OF EXISTING UTILITIES AS TAKEN FROM 'CITY OF BRIGHTON WATER AND SEWER MAPS DATED JUNE 2004.

SYMBOL LEGEND

- 45 DEG BEND
- 22.5 DEG BEND
- RESTRAINED PLUG
- RESTRAINED TEE
- WATER METER
- RESTRAINED CROSS
- FIRE HYDRANT
- RESTRAINED WATER VALVE
- PIPE CROSSOVER
- MANHOLE
- PARKING STALL COUNT

LINETYPE LEGEND

- LOT / PROPERTY LINE
- RIGHT OF WAY LINE
- EASEMENT
- TO BE ABANDONED LOT LINE
- EXISTING BUILDING, CURB
- EDGE of ASPHALT
- CHAINLINK FENCE
- WIRE FENCE
- POND WQ W/S
- SWALE
- OHE — EXISTING OVERHEAD ELEC
- E — EXISTING ELECTICAL LINE
- ST — EXISTING STORM LINE
- S — EXISTING SANITARY LINE
- W — EXISTING WATER LINE
- G — EXISTING GAS LINE
- FIBER — EXISTING FIBER OPTIC LINE
- T — EXISTING TELEPHONE LINE
- SA — PROPOSED SANITARY LINE
- SS — PROPOSED SANITARY SERVICE
- STM — PROPOSED STORM LINE
- WA — PROPOSED WATER LINE
- WAS — PROPOSED WATER SERVICE
- GA — PROPOSED GAS LINE
- EL — PROPOSED ELECTRIC LINE
- PH — PROPOSED TELEPHONE LINE

MARKET STREET BUSINESS PARK SUBDIVISION Erosion Control Signature Sheet

"This *Erosion and Sediment Control Plan* has been placed in the MARKET STREET BUSINESS PARK SUBDIVISION file for this project. The plan appears to fulfill the Urban Drainage and Flood Control District's technical criteria and the criteria for erosion control and requirements of the City of Keenesburg and State of Colorado. I understand that additional erosion control measure may be needed if unforeseen erosion problems occur or if the submitted plan does not function as intended. The requirements of this plan shall run with the land and be the obligation of the land owner until such time as the plan is properly completed, modified or voided."

I have reviewed the information contained within the Erosion and Sediment Control Plan and accept responsibility for the requirements set forth.

Rick Robertson, SWMP Administrator KEENE LAND Rough Grading

CERTIFICATIONS

This study (plan) for the Storm Water Management Plan for MARKET STREET BUSINESS PARK SUBDIVISION, was prepared by me (or under my direct supervision) in accordance with the provisions of State of Colorado and designed to comply with the provisions thereof.

Chadwin F. Cox, P.E.
State of Colorado No. 33802

127 S. DENVER AVE
FT. LUPTON, CO 80621
www.westernec.com
enoc@westernec.com
(720) 685-9951
FAX (720) 294-1330
Western Engineering Consultants, inc LLC

No.	REVISION	DATE	BY
0	PRELIM/FINAL PLAT SUBMITTAL	08/06/19	CFC

KEENE LAND LLC
CONTACT: RICK ROBERTSON
853 W 1st
KEENESBURG, CO 80643
(303)961-0031

INTERIM EROSION CONTROL PLAN
MARKET STREET BUSINESS PARK SUBDIVISION
TOWN of KEENESBURG, WELD COUNTY, COLORADO

Dig Safely.
CALL UNCC
THREE WORKING DAYS BEFORE YOU DIG
811
www.uncc.org
UTILITY NOTIFICATION CENTER OF COLORADO

COLORADO REGISTERED PROFESSIONAL ENGINEER
CHADWIN F. COX
FOR
33802
REVIEW ONLY
08/06/19
ONLY VALID FOR CONSTRUCTION IF SEAL & ORIGINAL SIGNATURE ARE ON EACH SHEET

INITIAL PLAN RELEASE: 08/06/19
DESIGNED BY: CFC
DRAWN BY: CFC
CHECKED BY: CFC
PROJECT NO. 01-0187.003.00
DOC CON # C6.01-INTEC
SHT C6.01

T:\0187_003_00-KEENE LAND-MARKET BUS PARK\Dwg\CDs\0187_003-WECI-CDS-6.00.dwg, C6.01-INT EC, 8/16/2019 11:52:33 AM , DWG To PDF.pc3, WEC 24"36, WEC 24"36

FINAL

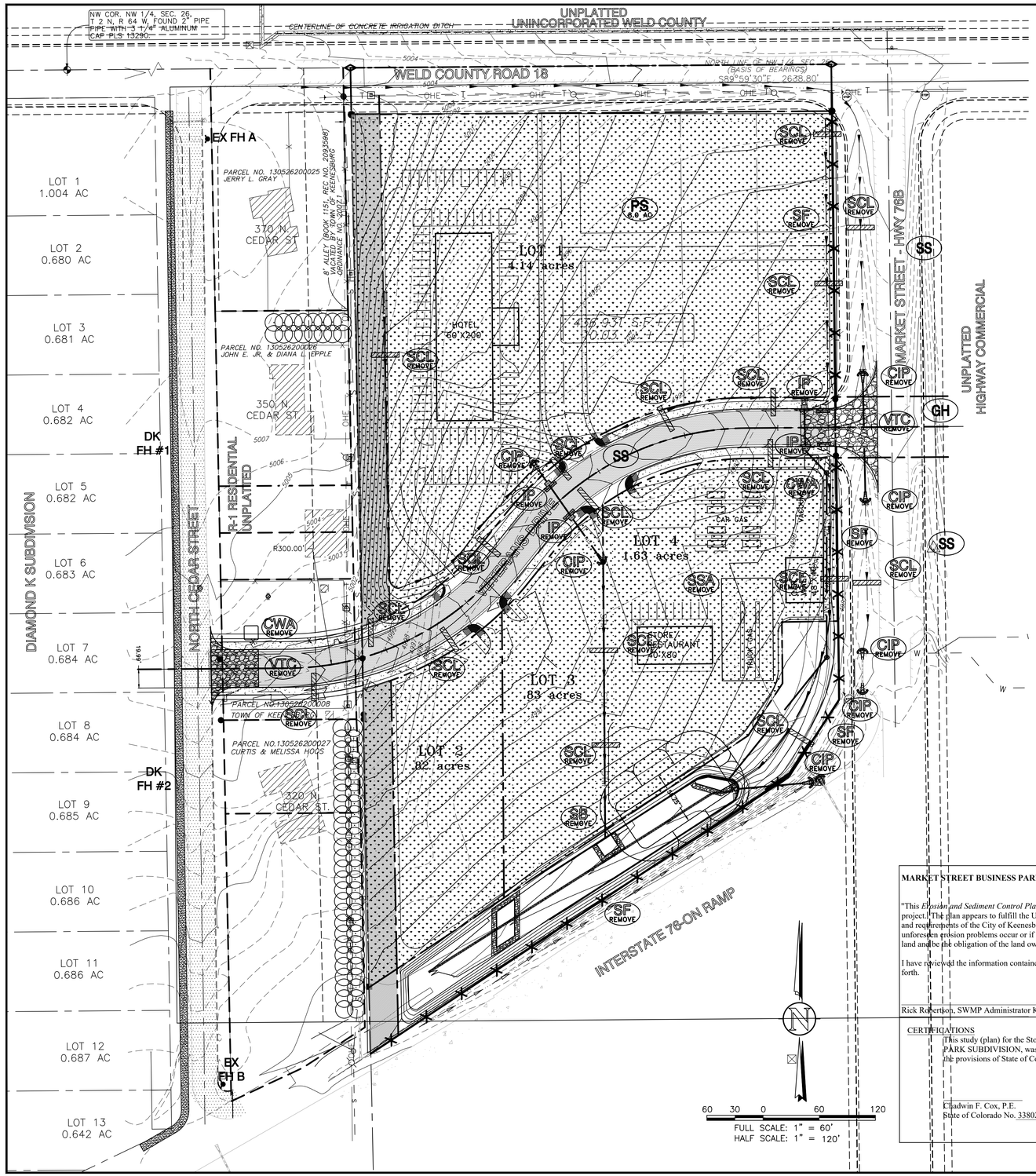

BMP LEGEND

CWA	CONCRETE WASHOUT AREA
CF	CONSTRUCTION FENCE
CM	CONSTRUCTION MARKER
CIP	CULVERT INLET PROTECTION
DC	WIND EROSION & DUST CONTROL
DS	DRAINAGE SWALE
GH	GOOD HOUSEKEEPING PRACTICE
IP	INLET PROTECTION
PS	PERMANENT SEEDING
RS	ROCK SOCK
SB	SEDIMENT BASIN
SCL	SEDIMENT CONTROL LOG
SF	SILT FENCE
SS	STREET SWEEPING VACUMMING
SSA	STABILIZED STAGING AREA
SP	STOCK PILE
TOP	TEMPORARY OUTLET PROTECTION
VB	VEGETATED BUFFER
VTC	VEHICLE TRACKING CONTROL

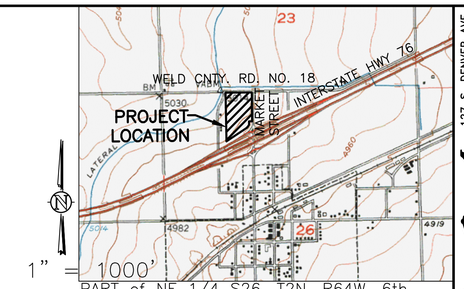

PART of NE 1/4 S26, T2N, R64W, 6th PM

SHOWN VICINITY MAP TAKEN FROM USGS QUAD – KEENESBURG 40104–A5

NOTES

THIS PLAN IS INTENDED AS THE FINAL EROSION CONTROL PLAN FOR MARKET STREET BUSINESS PARK SUBDIVISION.

ALL IMPROVEMENTS ARE PROPOSED UNLESS NOTED AS EXISTING.

IT IS THE OWNER AND/OR THE CONTRACTOR'S RESPONSIBILITY TO ATTAIN ALL APPROPRIATE PERMITS AND REVIEW APPROVALS FROM THE STATE OF COLORADO AND CITY OF BRIGHTON RESPECTIVELY.

SEE "AS BUILT/BOUNDARY SURVEY" COMPLETED BY AMERICAN WEST LAND SURVEY – DATED MAY 24, 2006.

SEE COVER FOR PROJECT BENCHMARK AND BASIS OF BEARING.

SITE BENCHMARK WAS ESTABLISHED BEING A 3" BRASS CAP IN CONCRETE LYING FIVE FEET WEST OF A CONCRETE IRRIGATION DITCH NEAR THE INTERSECTION OF COUNTY ROAD 18 AND NORTH CEDAR STREET, AND THIRTY FEET NORTH OF THE CENTERLINE OF COUNTY ROAD 18. STAMPED "NATIONAL GEODETIC SURVEY ACD 1" HAVING AN ELEVATION OF 5008.06 FEET (NAVD 1988)

ANY REFERENCE TO EASEMENTS, SURVEY POINTS, OR EXISTING UTILITIES AND FEATURES ARE BASED SOLELY FROM SURVEY INFORMATION PROVIDED BY OTHERS – SPECIFICALLY PER SAME SURVEY NOTED ABOVE.

NOT ALL UNCC UTILITY LOCATES HAVE BEEN PERFORMED. IT IS THE CONTRACTOR'S RESPONSIBILITY TO VERIFY ALL UTILITIES ARE LOCATED AND SURVEY PROVIDED TO THE OWNER AND ENGINEER PRIOR TO CONSTRUCTION DRAWING RELEASE.

SIZES OF EXISTING UTILITIES AS TAKEN FROM 'CITY OF BRIGHTON WATER AND SEWER MAPS DATED JUNE 2004.

SYMBOL LEGEND

- 45 DEG BEND
- 22.5 DEG BEND
- RESTRAINED PLUG
- RESTRAINED TEE
- WATER METER
- RESTRAINED CROSS
- FIRE HYDRANT
- RESTRAINED WATER VALVE
- PIPE CROSSOVER
- MANHOLE
- PARKING STALL COUNT

LINETYPE LEGEND

	LOT / PROPERTY LINE
	RIGHT OF WAY LINE
	EASEMENT
	TO BE ABANDONED LOT LINE
	EXISTING BUILDING, CURB
	EDGE of ASPHALT
X	CHAINLINK FENCE
	WIRE FENCE
	POND WQ W/S
	SWALE
OHE	EXISTING OVERHEAD ELEC
E	EXISTING ELECTICAL LINE
S	EXISTING STORM LINE
W	EXISTING SANITARY LINE
G	EXISTING WATER LINE
	EXISTING GAS LINE
FIBER	EXISTING FIBER OPTIC LINE
T	EXISTING TELEPHONE LINE
SA	PROPOSED SANITARY LINE
SS	PROPOSED SANITARY SERVICE
STM	PROPOSED STORM LINE
WA	PROPOSED WATER LINE
WAS	PROPOSED WATER SERVICE
GA	PROPOSED GAS LINE
EL	PROPOSED ELECTRIC LINE
PH	PROPOSED TELEPHONE LINE

MARKET STREET BUSINESS PARK SUBDIVISION Erosion Control Signature Sheet

"This *Erosion and Sediment Control Plan* has been placed in the MARKET STREET BUSINESS PARK SUBDIVISION file for this project. The plan appears to fulfill the Urban Drainage and Flood Control District's technical criteria and the criteria for erosion control and requirements of the City of Keenesburg and State of Colorado. I understand that additional erosion control measure may be needed if unforeseen erosion problems occur or if the submitted plan does not function as intended. The requirements of this plan shall run with the land and be the obligation of the land owner until such time as the plan is properly completed, modified or voided."

I have reviewed the information contained within the Erosion and Sediment Control Plan and accept responsibility for the requirements set forth.

Rick Robertson, SWMP Administrator KEENE LAND Rough Grading

CERTIFICATIONS

This study (plan) for the Storm Water Management Plan for MARKET STREET BUSINESS PARK SUBDIVISION, was prepared by me (or under my direct supervision) in accordance with the provisions of State of Colorado and designed to comply with the provisions thereof.

Chadwin F. Cox, P.E.
State of Colorado No. 33802

127 S. DENVER AVE
FT. LUPTON, CO 80621
www.westernec.com
email@westernec.com
(720) 685–9951
FAX (720) 294-1330
Western Engineering Consultants, inc LLC

No.	REVISION	DATE	BY
0	PRELIM/FINAL PLAT SUBMITTAL	08/06/19	CFC

KEENE LAND LLC
CONTACT: RICK ROBERTSON
83 CO RD 96
KEENESBURG, CO 80643
(303)961-0031

FINAL EROSION CONTROL PLAN
MARKET STREET BUSINESS PARK SUBDIVISION
TOWN of KEENESBURG, WELD COUNTY, COLORADO

Dig Safely.
CALL UNCC
THREE WORKING DAYS BEFORE YOU DIG
811
www.uncc.org
UTILITY NOTIFICATION CENTER OF COLORADO

COLORADO REGISTERED PROFESSIONAL ENGINEER
CHADWIN F. COX
FOR REVIEW ONLY
33802
08/06/19
ONLY VALID FOR CONSTRUCTION IF SEAL & ORIGINAL SIGNATURE ARE ON EACH SHEET

INITIAL PLAN RELEASE: 08/06/19
DESIGNED BY: CFC
DRAWN BY: CFC
CHECKED BY: CFC
PROJECT NO. 01-0187.003.00
DOC CON # C6.02-FNLEC
SHT C6.02

T:\0187_003_00-KEENE LAND-MARKET BUS PARK\Dwg\CDs\0187_003-WECI-CD5-6.00.dwg, C6.02-FNL EC, 8/16/2019 11:52:42 AM, _DWG To PDF.pc3, WEC 24*36, WEC 24*36

Concrete Washout Area (CWA) — MM-1

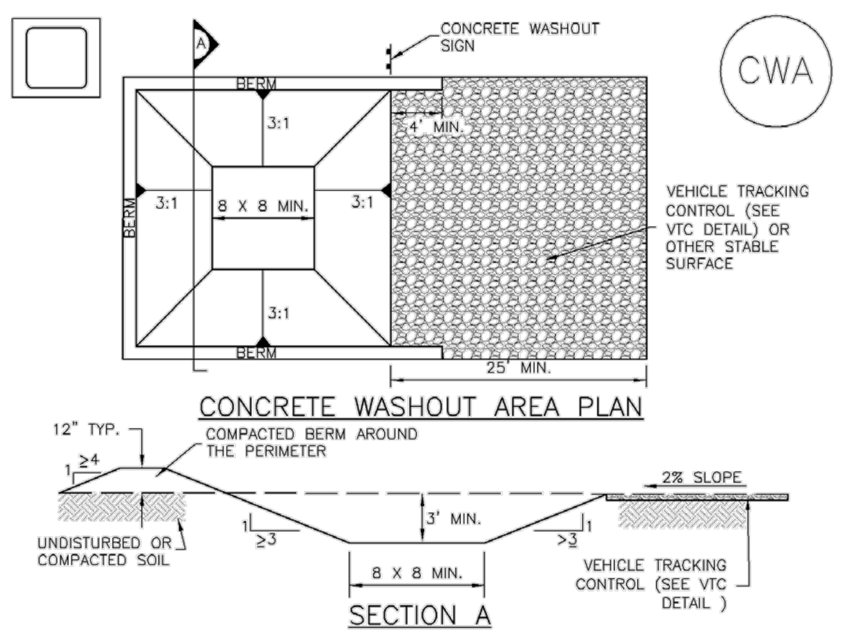

CWA–1. CONCRETE WASHOUT AREA

CWA INSTALLATION NOTES

1. SEE PLAN VIEW FOR:
   –CWA INSTALLATION LOCATION.

2. DO NOT LOCATE AN UNLINED CWA WITHIN 400' OF ANY NATURAL DRAINAGE PATHWAY OR WATERBODY. DO NOT LOCATE WITHIN 1,000' OF ANY WELLS OR DRINKING WATER SOURCES. IF SITE CONSTRAINTS MAKE THIS INFEASIBLE, OR IF HIGHLY PERMEABLE SOILS EXIST ON SITE, THE CWA MUST BE INSTALLED WITH AN IMPERMEABLE LINER (16 MIL MIN. THICKNESS) OR SURFACE STORAGE ALTERNATIVES USING PREFABRICATED CONCRETE WASHOUT DEVICES OR A LINED ABOVE GROUND STORAGE ARE SHOULD BE USED.

3. THE CWA SHALL BE INSTALLED PRIOR TO CONCRETE PLACEMENT ON SITE.

4. CWA SHALL INCLUDE A FLAT SUBSURFACE PIT THAT IS AT LEAST 8' BY 8' SLOPES LEADING OUT OF THE SUBSURFACE PIT SHALL BE 3:1 OR FLATTER. THE PIT SHALL BE AT LEAST 3' DEEP.

5. BERM SURROUNDING SIDES AND BACK OF THE CWA SHALL HAVE MINIMUM HEIGHT OF 1'.

6. VEHICLE TRACKING PAD SHALL BE SLOPED 2% TOWARDS THE CWA.

7. SIGNS SHALL BE PLACED AT THE CONSTRUCTION ENTRANCE, AT THE CWA, AND ELSEWHERE AS NECESSARY TO CLEARLY INDICATE THE LOCATION OF THE CWA TO OPERATORS OF CONCRETE TRUCKS AND PUMP RIGS.

8. USE EXCAVATED MATERIAL FOR PERIMETER BERM CONSTRUCTION.

MM-1 — Concrete Washout Area (CWA)

CWA MAINTENANCE NOTES

1. INSPECT BMPs EACH WORKDAY, AND MAINTAIN THEM IN EFFECTIVE OPERATING CONDITION. MAINTENANCE OF BMPs SHOULD BE PROACTIVE, NOT REACTIVE. INSPECT BMPs AS SOON AS POSSIBLE (AND ALWAYS WITHIN 24 HOURS) FOLLOWING A STORM THAT CAUSES SURFACE EROSION, AND PERFORM NECESSARY MAINTENANCE.

2. FREQUENT OBSERVATIONS AND MAINTENANCE ARE NECESSARY TO MAINTAIN BMPs IN EFFECTIVE OPERATING CONDITION. INSPECTIONS AND CORRECTIVE MEASURES SHOULD BE DOCUMENTED THOROUGHLY.

3. WHERE BMPs HAVE FAILED, REPAIR OR REPLACEMENT SHOULD BE INITIATED UPON DISCOVERY OF THE FAILURE.

4. THE CWA SHALL BE REPAIRED, CLEANED, OR ENLARGED AS NECESSARY TO MAINTAIN CAPACITY FOR CONCRETE WASTE. CONCRETE MATERIALS, ACCUMULATED IN PIT, SHALL BE REMOVED ONCE THE MATERIALS HAVE REACHED A DEPTH OF 2'.

5. CONCRETE WASHOUT WATER, WASTED PIECES OF CONCRETE AND ALL OTHER DEBRIS IN THE SUBSURFACE PIT SHALL BE TRANSPORTED FROM THE JOB SITE IN A WATER–TIGHT CONTAINER AND DISPOSED OF PROPERLY.

6. THE CWA SHALL REMAIN IN PLACE UNTIL ALL CONCRETE FOR THE PROJECT IS PLACED.

7. WHEN THE CWA IS REMOVED, COVER THE DISTURBED AREA WITH TOP SOIL, SEED AND MULCH OR OTHERWISE STABILIZED IN A MANNER APPROVED BY THE LOCAL JURISDICTION.

(DETAIL ADAPTED FROM DOUGLAS COUNTY, COLORADO AND THE CITY OF PARKER, COLORADO, NOT AVAILABLE IN AUTOCAD).

NOTE: MANY JURISDICTIONS HAVE BMP DETAILS THAT VARY FROM UDFCD STANDARD DETAILS. CONSULT WITH LOCAL JURISDICTIONS AS TO WHICH DETAIL SHOULD BE USED WHEN DIFFERENCES ARE NOTED.

Silt Fence (SF) — SC-1

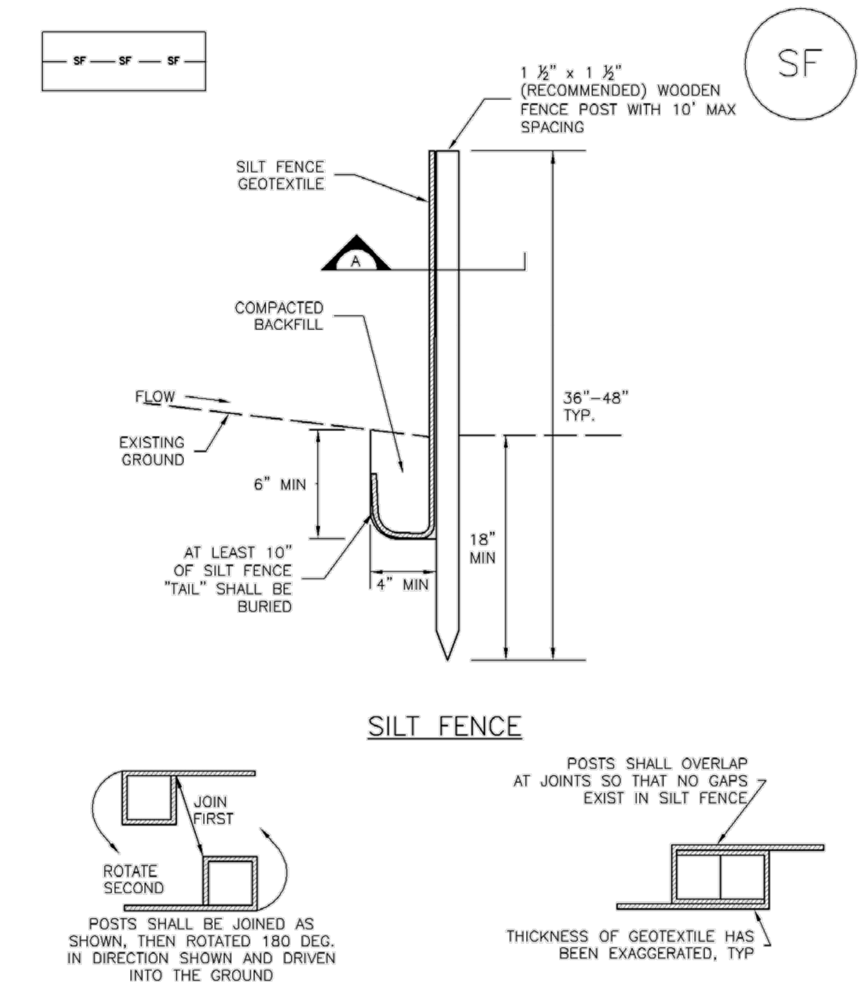

SF–1. SILT FENCE

SC-1 — Silt Fence (SF)

SILT FENCE INSTALLATION NOTES

1. SILT FENCE MUST BE PLACED AWAY FROM THE TOE OF THE SLOPE TO ALLOW FOR WATER PONDING. SILT FENCE AT THE TOE OF A SLOPE SHOULD BE INSTALLED IN A FLAT LOCATION AT LEAST SEVERAL FEET (2–5 FT) FROM THE TOE OF THE SLOPE TO ALLOW ROOM FOR PONDING AND DEPOSITION.

2. A UNIFORM 6" X 4" ANCHOR TRENCH SHALL BE EXCAVATED USING TRENCHER OR SILT FENCE INSTALLATION DEVICE. NO ROAD GRADERS, BACKHOES, OR SIMILAR EQUIPMENT SHALL BE USED.

3. COMPACT ANCHOR TRENCH BY HAND WITH A "JUMPING JACK" OR BY WHEEL ROLLING. COMPACTION SHALL BE SUCH THAT SILT FENCE RESISTS BEING PULLED OUT OF ANCHOR TRENCH BY HAND.

4. SILT FENCE SHALL BE PULLED TIGHT AS IT IS ANCHORED TO THE STAKES. THERE SHOULD BE NO NOTICEABLE SAG BETWEEN STAKES AFTER IT HAS BEEN ANCHORED TO THE STAKES.

5. SILT FENCE FABRIC SHALL BE ANCHORED TO THE STAKES USING 1" HEAVY DUTY STAPLES OR NAILS WITH 1" HEADS. STAPLES AND NAILS SHOULD BE PLACED 3" ALONG THE FABRIC DOWN THE STAKE.

6. AT THE END OF A RUN OF SILT FENCE ALONG A CONTOUR, THE SILT FENCE SHOULD BE TURNED PERPENDICULAR TO THE CONTOUR TO CREATE A "J–HOOK." THE "J–HOOK" EXTENDING PERPENDICULAR TO THE CONTOUR SHOULD BE OF SUFFICIENT LENGTH TO KEEP RUNOFF FROM FLOWING AROUND THE END OF THE SILT FENCE (TYPICALLY 10' – 20').

7. SILT FENCE SHALL BE INSTALLED PRIOR TO ANY LAND DISTURBING ACTIVITIES.

SILT FENCE MAINTENANCE NOTES

1. INSPECT BMPs EACH WORKDAY, AND MAINTAIN THEM IN EFFECTIVE OPERATING CONDITION. MAINTENANCE OF BMPs SHOULD BE PROACTIVE, NOT REACTIVE. INSPECT BMPs AS SOON AS POSSIBLE (AND ALWAYS WITHIN 24 HOURS) FOLLOWING A STORM THAT CAUSES SURFACE EROSION, AND PERFORM NECESSARY MAINTENANCE.

2. FREQUENT OBSERVATIONS AND MAINTENANCE ARE NECESSARY TO MAINTAIN BMPs IN EFFECTIVE OPERATING CONDITION. INSPECTIONS AND CORRECTIVE MEASURES SHOULD BE DOCUMENTED THOROUGHLY.

3. WHERE BMPs HAVE FAILED, REPAIR OR REPLACEMENT SHOULD BE INITIATED UPON DISCOVERY OF THE FAILURE.

4. SEDIMENT ACCUMULATED UPSTREAM OF THE SILT FENCE SHALL BE REMOVED AS NEEDED TO MAINTAIN THE FUNCTIONALITY OF THE BMP, TYPICALLY WHEN DEPTH OF ACCUMULATED SEDIMENTS IS APPROXIMATELY 6".

5. REPAIR OR REPLACE SILT FENCE WHEN THERE ARE SIGNS OF WEAR, SUCH AS SAGGING, TEARING, OR COLLAPSE.

6. SILT FENCE IS TO REMAIN IN PLACE UNTIL THE UPSTREAM DISTURBED AREA IS STABILIZED AND APPROVED BY THE LOCAL JURISDICTION, OR IS REPLACED BY AN EQUIVALENT PERIMETER SEDIMENT CONTROL BMP.

7. WHEN SILT FENCE IS REMOVED, ALL DISTURBED AREAS SHALL BE COVERED WITH TOPSOIL, SEEDED AND MULCHED OR OTHERWISE STABILIZED AS APPROVED BY LOCAL JURISDICTION.

(DETAIL ADAPTED FROM TOWN OF PARKER, COLORADO AND CITY OF AURORA, NOT AVAILABLE IN AUTOCAD)

NOTE: MANY JURISDICTIONS HAVE BMP DETAILS THAT VARY FROM UDFCD STANDARD DETAILS. CONSULT WITH LOCAL JURISDICTIONS AS TO WHICH DETAIL SHOULD BE USED WHEN DIFFERENCES ARE NOTED.

Stabilized Staging Area (SSA) — SM-6

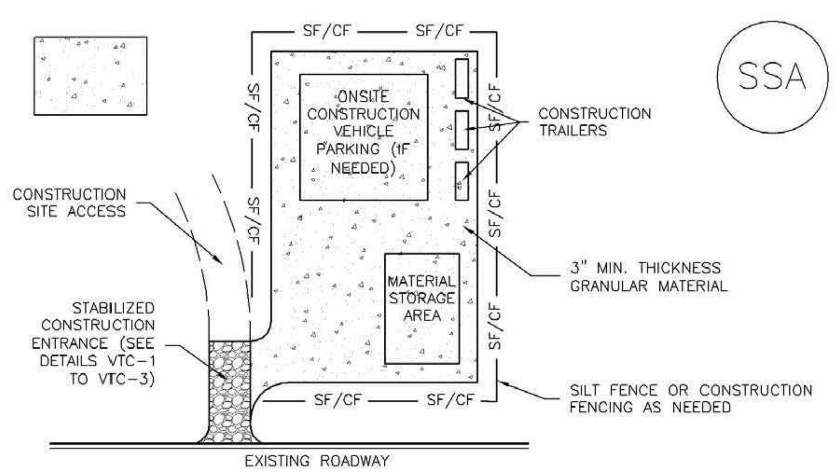

SSA–1. STABILIZED STAGING AREA

STABILIZED STAGING AREA INSTALLATION NOTES

1. SEE PLAN VIEW FOR
   –LOCATION OF STAGING AREA(S).
   –CONTRACTOR MAY ADJUST LOCATION AND SIZE OF STAGING AREA WITH APPROVAL FROM THE LOCAL JURISDICTION.

2. STABILIZED STAGING AREA SHOULD BE APPROPRIATE FOR THE NEEDS OF THE SITE. OVERSIZING RESULTS IN A LARGER AREA TO STABILIZE FOLLOWING CONSTRUCTION.

3. STAGING AREA SHALL BE STABILIZED PRIOR TO OTHER OPERATIONS ON THE SITE.

4. THE STABILIZED STAGING AREA SHALL CONSIST OF A MINIMUM 3" THICK GRANULAR MATERIAL.

5. UNLESS OTHERWISE SPECIFIED BY LOCAL JURISDICTION, ROCK SHALL CONSIST OF DOT SECT. #703, AASHTO #3 COARSE AGGREGATE OR 6" (MINUS) ROCK.

6. ADDITIONAL PERIMETER BMPs MAY BE REQUIRED INCLUDING BUT NOT LIMITED TO SILT FENCE AND CONSTRUCTION FENCING.

STABILIZED STAGING AREA MAINTENANCE NOTES

1. INSPECT BMPs EACH WORKDAY, AND MAINTAIN THEM IN EFFECTIVE OPERATING CONDITION. MAINTENANCE OF BMPs SHOULD BE PROACTIVE, NOT REACTIVE. INSPECT BMPs AS SOON AS POSSIBLE (AND ALWAYS WITHIN 24 HOURS) FOLLOWING A STORM THAT CAUSES SURFACE EROSION, AND PERFORM NECESSARY MAINTENANCE.

2. FREQUENT OBSERVATIONS AND MAINTENANCE ARE NECESSARY TO MAINTAIN BMPs IN EFFECTIVE OPERATING CONDITION. INSPECTIONS AND CORRECTIVE MEASURES SHOULD BE DOCUMENTED THOROUGHLY.

3. WHERE BMPs HAVE FAILED, REPAIR OR REPLACEMENT SHOULD BE INITIATED UPON DISCOVERY OF THE FAILURE.

4. ROCK SHALL BE REAPPLIED OR REGRADED AS NECESSARY IF RUTTING OCCURS OR UNDERLYING SUBGRADE BECOMES EXPOSED.

SM-6 — Stabilized Staging Area (SSA)

STABILIZED STAGING AREA MAINTENANCE NOTES

5. STABILIZED STAGING AREA SHALL BE ENLARGED IF NECESSARY TO CONTAIN PARKING, STORAGE, AND UNLOADING/LOADING OPERATIONS.

6. THE STABILIZED STAGING AREA SHALL BE REMOVED AT THE END OF CONSTRUCTION. THE GRANULAR MATERIAL SHALL BE REMOVED OR, IF APPROVED BY THE LOCAL JURISDICTION, USED ON SITE, AND THE AREA COVERED WITH TOPSOIL, SEEDED AND MULCHED OR OTHERWISE STABILIZED IN A MANNER APPROVED BY LOCAL JURISDICTION.

NOTE: MANY MUNICIPALITIES PROHIBIT THE USE OF RECYCLED CONCRETE AS GRANULAR MATERIAL FOR STABILIZED STAGING AREAS DUE TO DIFFICULTIES WITH RE–ESTABLISHMENT OF VEGETATION IN AREAS WHERE RECYCLED CONCRETE WAS PLACED.

NOTE: MANY JURISDICTIONS HAVE BMP DETAILS THAT VARY FROM UDFCD STANDARD DETAILS. CONSULT WITH LOCAL JURISDICTIONS AS TO WHICH DETAIL SHOULD BE USED WHEN DIFFERENCES ARE NOTED.

(DETAILS ADAPTED FROM DOUGLAS COUNTY, COLORADO, NOT AVAILABLE IN AUTOCAD)

Sediment Basin (SB) — SC-7

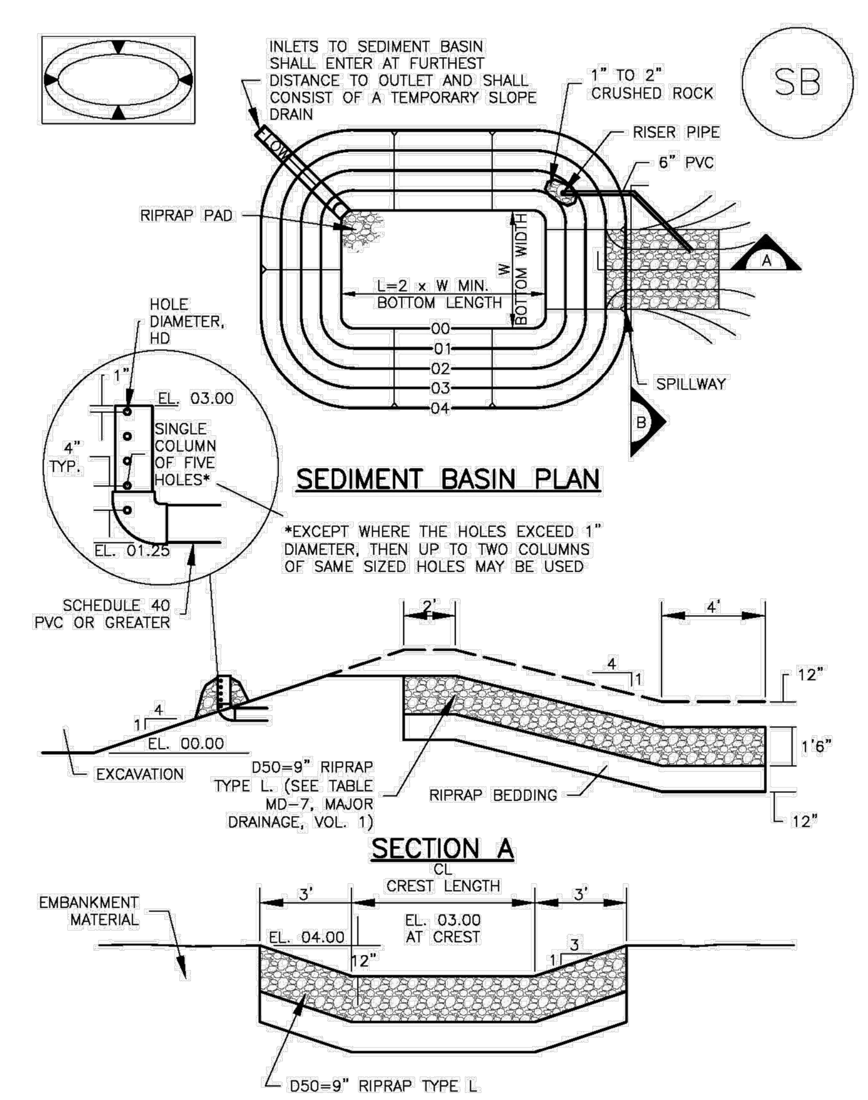

SC-7 — Sediment Basin (SB)

TABLE SB–1. SIZING INFORMATION FOR STANDARD SEDIMENT BASIN

Upstream Drainage Area (rounded to nearest acre), (ac)	Basin Bottom Width (W), (ft)	Spillway Crest Length (CL), (ft)	Hole Diameter (HD), (in)
1	12 ½	2	9/32
2	21	3	13/16
3	28	5	½
4	33 ½	6	9/16
5	38 ½	8	21/32
6	43	9	21/32
7	47 ¼	11	25/32
8	51	12	27/32
9	55	13	7/8
10	58 ¼	15	15/16
11	61	16	31/32
12	64	18	1
13	67 ½	19	1 1/16
14	70 ½	21	1 1/8
15	73 ¼	22	1 3/16

SEDIMENT BASIN INSTALLATION NOTES

1. SEE PLAN VIEW FOR:
   –LOCATION OF SEDIMENT BASIN.
   –TYPE OF BASIN (STANDARD BASIN OR NONSTANDARD BASIN).
   –FOR STANDARD BASIN, BOTTOM WIDTH W, CREST LENGTH CL, AND HOLE DIAMETER, HD.
   –FOR NONSTANDARD BASIN, SEE CONSTRUCTION DRAWINGS FOR DESIGN OF BASIN INCLUDING RISER HEIGHT H, NUMBER OF COLUMNS N, HOLE DIAMETER HD AND PIPE DIAMETER D.

2. FOR STANDARD BASIN, BOTTOM DIMENSION MAY BE MODIFIED AS LONG AS BOTTOM AREA IS NOT REDUCED.

3. SEDIMENT BASINS SHALL BE INSTALLED PRIOR TO ANY OTHER LAND–DISTURBING ACTIVITY THAT RELIES ON ON BASINS AS AS A STORMWATER CONTROL.

4. EMBANKMENT MATERIAL SHALL CONSIST OF SOIL FREE OF DEBRIS, ORGANIC MATERIAL, AND ROCKS OR CONCRETE GREATER THAN 3 INCHES AND SHALL HAVE A MINIMUM OF 15 PERCENT BY WEIGHT PASSING THE NO. 200 SIEVE.

5. EMBANKMENT MATERIAL SHALL BE COMPACTED TO AT LEAST 95 PERCENT OF MAXIMUM DENSITY IN ACCORDANCE WITH ASTM D698.

6. PIPE SCH 40 OR GREATER SHALL BE USED.

7. THE DETAILS SHOWN ON THESE SHEETS PERTAIN TO STANDARD SEDIMENT BASIN(S) FOR DRAINAGE AREAS LESS THAN 15 ACRES. SEE CONSTRUCTION DRAWINGS FOR EMBANKMENT, STORAGE VOLUME, SPILLWAY, OUTLET, AND OUTLET PROTECTION DETAILS FOR ANY SEDIMENT BASIN(S) THAT HAVE BEEN INDIVIDUALLY DESIGNED FOR DRAINAGE AREAS LARGER THAN 15 ACRES.

127 S. DENVER AVE
FT. LUPTON, CO 80621
www.westerneci.com
email@westerneci.com
(720) 685–9951
FAX (720) 294–1330
Western Engineering Consultants, inc LLC

No.	REVISION	DATE	BY
0	PRELIM/FINAL PLAT SUBMITTAL	08/06/19	CFC

KEENE LAND, LLC
CONTACT: RICK ROBERTSON
8537 WCR 51
KEENESBURG, CO 80643
(303)961–0031

EROSION CONTROL DETAILS
MARKET STREET BUSINESS PARK SUBDIVISION
TOWN of KEENESBURG, WELD COUNTY, COLORADO

Dig Safely. CALL UNCC
THREE WORKING DAYS BEFORE YOU DIG
811
www.uncc.org
UTILITY NOTIFICATION CENTER OF COLORADO

COLORADO REGISTERED PROFESSIONAL ENGINEER — CHADWIN F. COX — FOR 33802 REVIEW ONLY 08/06/19
ONLY VALID FOR CONSTRUCTION IF SEAL & ORIGINAL SIGNATURE ARE ON EACH SHEET

INITIAL PLAN RELEASE: 08/06/19
DESIGNED BY: CFC
DRAWN BY: CFC
CHECKED BY: CFC
PROJECT NO. 01–0187.003.00
DOC CON # C6.03–ECDTL
SHT C6.03

T:\0187_003_00-KEENE LAND-MARKET BUS PARK\Dwg\CD\\0187_003-WECI-CDS-6.00.dwg, C6.03-ECDTLS, 8/16/2019 11:52:51 AM, _DWG To PDF.pc3, WEC 24"36, WEC 24"36

SEDIMENT BASIN MAINTENANCE NOTES

1. INSPECT BMPs EACH WORKDAY, AND MAINTAIN THEM IN EFFECTIVE OPERATING CONDITION. MAINTENANCE OF BMPs SHOULD BE PROACTIVE, NOT REACTIVE. INSPECT BMPs AS SOON AS POSSIBLE (AND ALWAYS WITHIN 24 HOURS) FOLLOWING A STORM THAT CAUSES SURFACE EROSION, AND PERFORM NECESSARY MAINTENANCE.

2. FREQUENT OBSERVATIONS AND MAINTENANCE ARE NECESSARY TO MAINTAIN BMPs IN EFFECTIVE OPERATING CONDITION. INSPECTIONS AND CORRECTIVE MEASURES SHOULD BE DOCUMENTED THOROUGHLY.

3. WHERE BMPs HAVE FAILED, REPAIR OR REPLACEMENT SHOULD BE INITIATED UPON DISCOVERY OF THE FAILURE.

4. SEDIMENT ACCUMULATED IN BASIN SHALL BE REMOVED AS NEEDED TO MAINTAIN BMP EFFECTIVENESS, TYPICALLY WHEN SEDIMENT DEPTH REACHES ONE FOOT (I.E., TWO FEET BELOW THE SPILLWAY CREST).

5. SEDIMENT BASINS ARE TO REMAIN IN PLACE UNTIL THE UPSTREAM DISTURBED AREA IS STABILIZED AND GRASS COVER IS ACCEPTED BY THE LOCAL JURISDICTION.

6. WHEN SEDIMENT BASINS ARE REMOVED, ALL DISTURBED AREAS SHALL BE COVERED WITH TOPSOIL, SEEDED AND MULCHED OR OTHERWISE STABILIZED AS APPROVED BY LOCAL JURISDICTION.

(DETAILS ADAPTED FROM DOUGLAS COUNTY, COLORADO)

NOTE: MANY JURISDICTIONS HAVE BMP DETAILS THAT VARY FROM UDFCD STANDARD DETAILS. CONSULT WITH LOCAL JURISDICTIONS AS TO WHICH DETAIL SHOULD BE USED WHEN DIFFERENCES ARE NOTED.

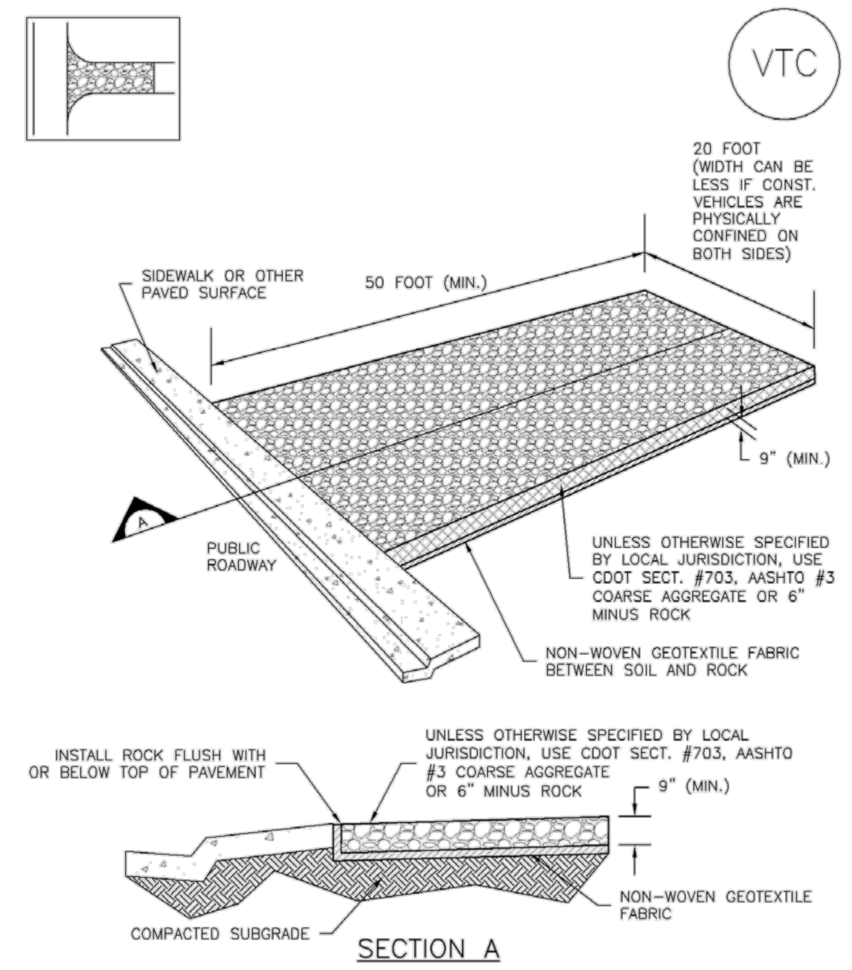

VTC-1. AGGREGATE VEHICLE TRACKING CONTROL

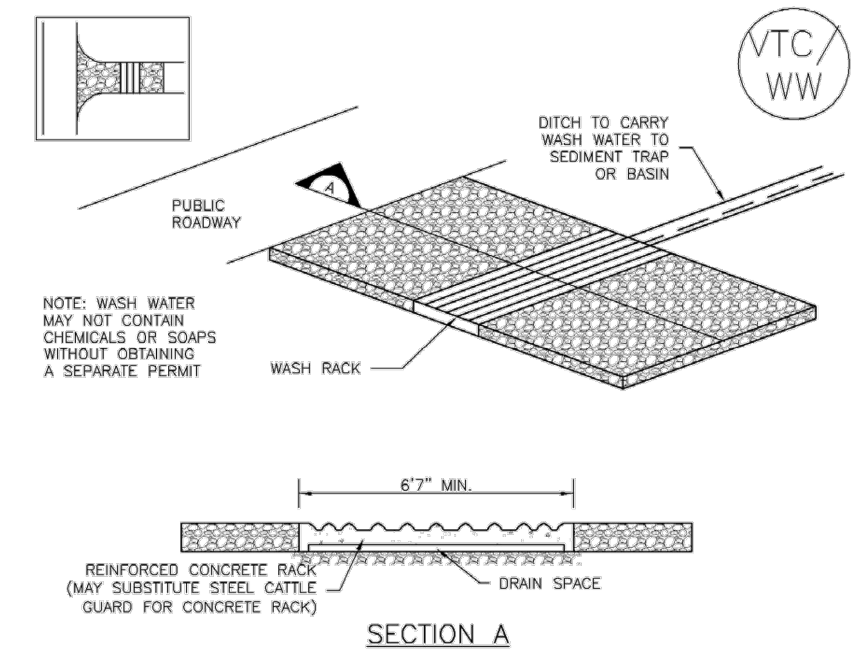

VTC-2. AGGREGATE VEHICLE TRACKING CONTROL WITH WASH RACK

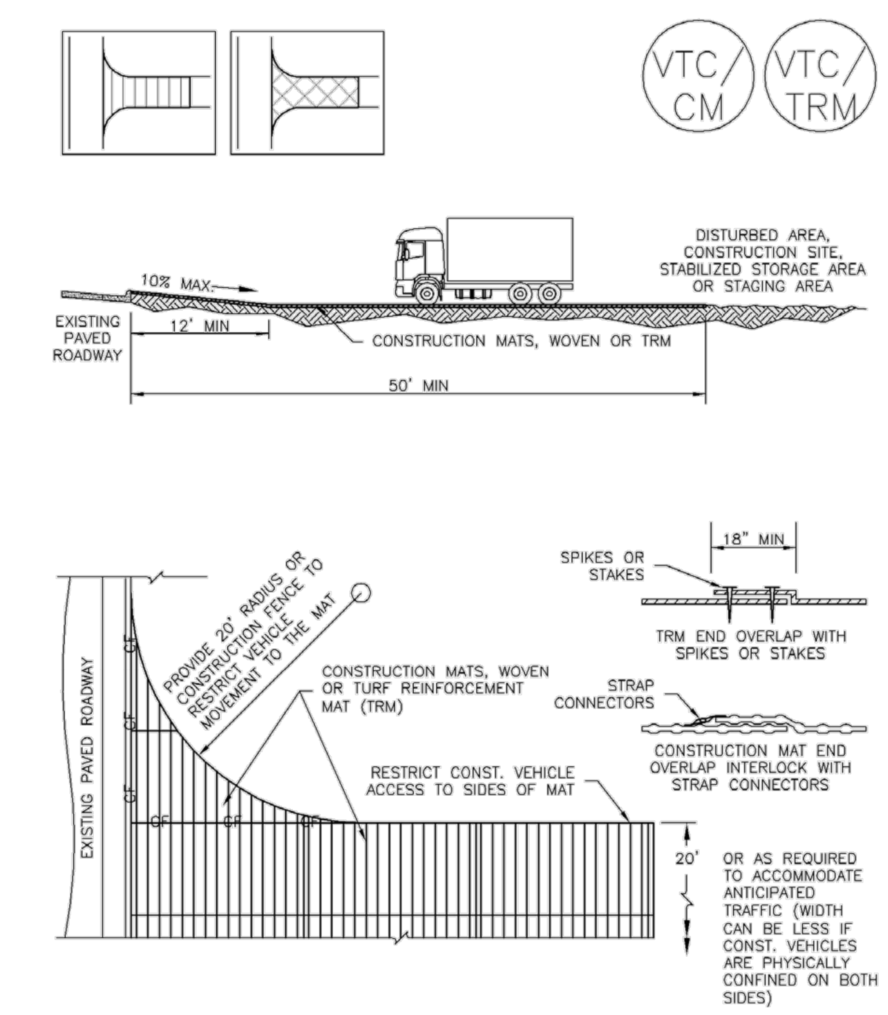

VTC-3. VEHICLE TRACKING CONTROL W/ CONSTRUCTION MAT OR TURF REINFORCEMENT MAT (TRM)

STABILIZED CONSTRUCTION ENTRANCE/EXIT INSTALLATION NOTES

1. SEE PLAN VIEW FOR
   -LOCATION OF CONSTRUCTION ENTRANCE(S)/EXIT(S).
   -TYPE OF CONSTRUCTION ENTRANCE(S)/EXITS(S) (WITH/WITHOUT WHEEL WASH, CONSTRUCTION MAT OR TRM).

2. CONSTRUCTION MAT OR TRM STABILIZED CONSTRUCTION ENTRANCES ARE ONLY TO BE USED ON SHORT DURATION PROJECTS (TYPICALLY RANGING FROM A WEEK TO A MONTH) WHERE THERE WILL BE LIMITED VEHICULAR ACCESS.

3. A STABILIZED CONSTRUCTION ENTRANCE/EXIT SHALL BE LOCATED AT ALL ACCESS POINTS WHERE VEHICLES ACCESS THE CONSTRUCTION SITE FROM PAVED RIGHT-OF-WAYS.

4. STABILIZED CONSTRUCTION ENTRANCE/EXIT SHALL BE INSTALLED PRIOR TO ANY LAND DISTURBING ACTIVITIES.

5. A NON-WOVEN GEOTEXTILE FABRIC SHALL BE PLACED UNDER THE STABILIZED CONSTRUCTION ENTRANCE/EXIT PRIOR TO THE PLACEMENT OF ROCK.

6. UNLESS OTHERWISE SPECIFIED BY LOCAL JURISDICTION, ROCK SHALL CONSIST OF DOT SECT. #703, AASHTO #3 COARSE AGGREGATE OR 6" (MINUS) ROCK.

STABILIZED CONSTRUCTION ENTRANCE/EXIT MAINTENANCE NOTES

1. INSPECT BMPs EACH WORKDAY, AND MAINTAIN THEM IN EFFECTIVE OPERATING CONDITION. MAINTENANCE OF BMPs SHOULD BE PROACTIVE, NOT REACTIVE. INSPECT BMPs AS SOON AS POSSIBLE (AND ALWAYS WITHIN 24 HOURS) FOLLOWING A STORM THAT CAUSES SURFACE EROSION, AND PERFORM NECESSARY MAINTENANCE.

2. FREQUENT OBSERVATIONS AND MAINTENANCE ARE NECESSARY TO MAINTAIN BMPs IN EFFECTIVE OPERATING CONDITION. INSPECTIONS AND CORRECTIVE MEASURES SHOULD BE DOCUMENTED THOROUGHLY.

3. WHERE BMPs HAVE FAILED, REPAIR OR REPLACEMENT SHOULD BE INITIATED UPON DISCOVERY OF THE FAILURE.

4. ROCK SHALL BE REAPPLIED OR REGRADED AS NECESSARY TO THE STABILIZED ENTRANCE/EXIT TO MAINTAIN A CONSISTENT DEPTH.

5. SEDIMENT TRACKED ONTO PAVED ROADS IS TO BE REMOVED THROUGHOUT THE DAY AND AT THE END OF THE DAY BY SHOVELING OR SWEEPING. SEDIMENT MAY NOT BE WASHED DOWN STORM SEWER DRAINS.

NOTE: MANY JURISDICTIONS HAVE BMP DETAILS THAT VARY FROM UDFCD STANDARD DETAILS. CONSULT WITH LOCAL JURISDICTIONS AS TO WHICH DETAIL SHOULD BE USED WHEN DIFFERENCES ARE NOTED.

(DETAILS ADAPTED FROM CITY OF BROOMFIELD, COLORADO, NOT AVAILABLE IN AUTOCAD)

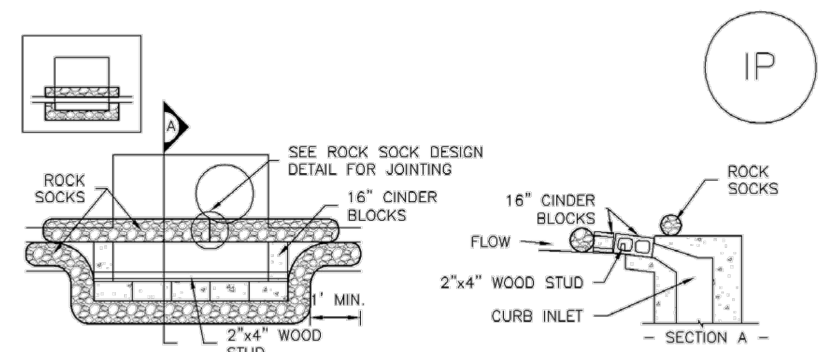

IP-1. BLOCK AND ROCK SOCK SUMP OR ON GRADE INLET PROTECTION

BLOCK AND CURB SOCK INLET PROTECTION INSTALLATION NOTES

1. SEE ROCK SOCK DESIGN DETAIL FOR INSTALLATION REQUIREMENTS.

2. CONCRETE "CINDER" BLOCKS SHALL BE LAID ON THEIR SIDES AROUND THE INLET IN A SINGLE ROW, ABUTTING ONE ANOTHER WITH THE OPEN END FACING AWAY FROM THE CURB.

3. GRAVEL BAGS SHALL BE PLACED AROUND CONCRETE BLOCKS, CLOSELY ABUTTING ONE ANOTHER AND JOINTED TOGETHER IN ACCORDANCE WITH ROCK SOCK DESIGN DETAIL.

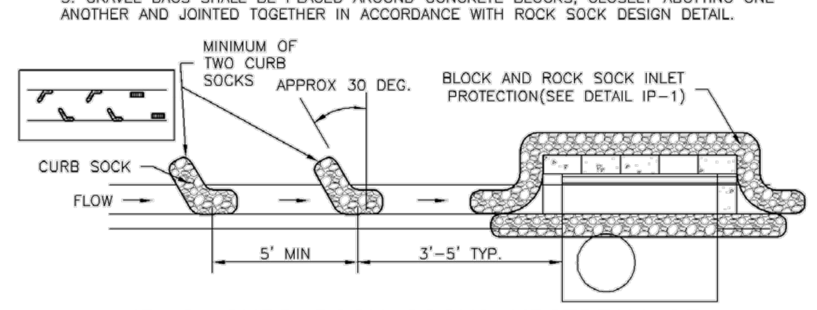

IP-2. CURB ROCK SOCKS UPSTREAM OF INLET PROTECTION

CURB ROCK SOCK INLET PROTECTION INSTALLATION NOTES

1. SEE ROCK SOCK DESIGN DETAIL INSTALLATION REQUIREMENTS.

2. PLACEMENT OF THE SOCK SHALL BE APPROXIMATELY 30 DEGREES FROM PERPENDICULAR IN THE OPPOSITE DIRECTION OF FLOW.

3. SOCKS ARE TO BE FLUSH WITH THE CURB AND SPACED A MINIMUM OF 5 FEET APART.

4. AT LEAST TWO CURB SOCKS IN SERIES ARE REQUIRED UPSTREAM OF ON-GRADE INLETS.

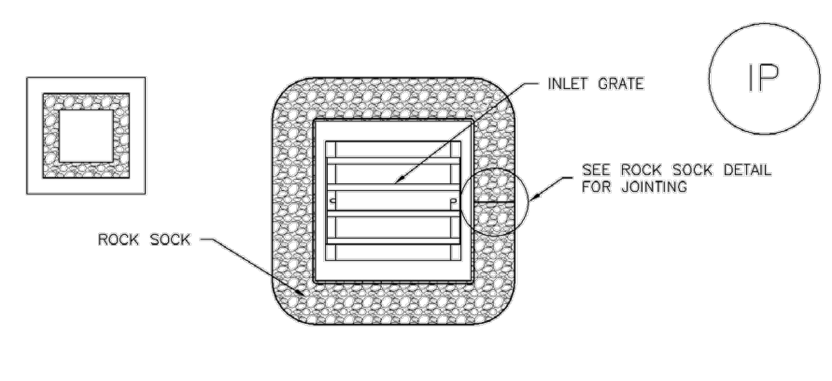

IP-3. ROCK SOCK SUMP/AREA INLET PROTECTION

ROCK SOCK SUMP/AREA INLET PROTECTION INSTALLATION NOTES
1. SEE ROCK SOCK DESIGN DETAIL FOR INSTALLATION REQUIREMENTS.

2. STRAW WATTLES/SEDIMENT CONTROL LOGS MAY BE USED IN PLACE OF ROCK SOCKS FOR INLETS IN PERVIOUS AREAS. INSTALL PER SEDIMENT CONTROL LOG DETAIL.

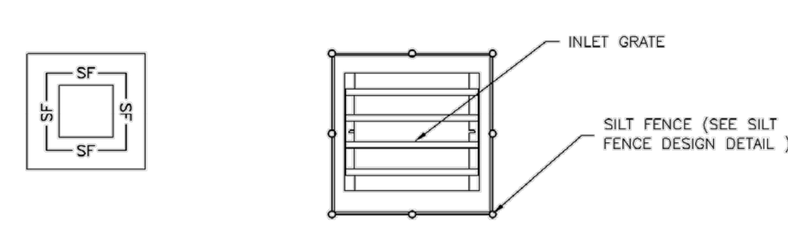

IP-4. SILT FENCE FOR SUMP INLET PROTECTION

SILT FENCE INLET PROTECTION INSTALLATION NOTES

1. SEE SILT FENCE DESIGN DETAIL FOR INSTALLATION REQUIREMENTS.

2. POSTS SHALL BE PLACED AT EACH CORNER OF THE INLET AND AROUND THE EDGES AT A MAXIMUM SPACING OF 3 FEET.

3. STRAW WATTLES/SEDIMENT CONTROL LOGS MAY BE USED IN PLACE OF SILT FENCE FOR INLETS IN PERVIOUS AREAS. INSTALL PER SEDIMENT CONTROL LOG DETAIL.

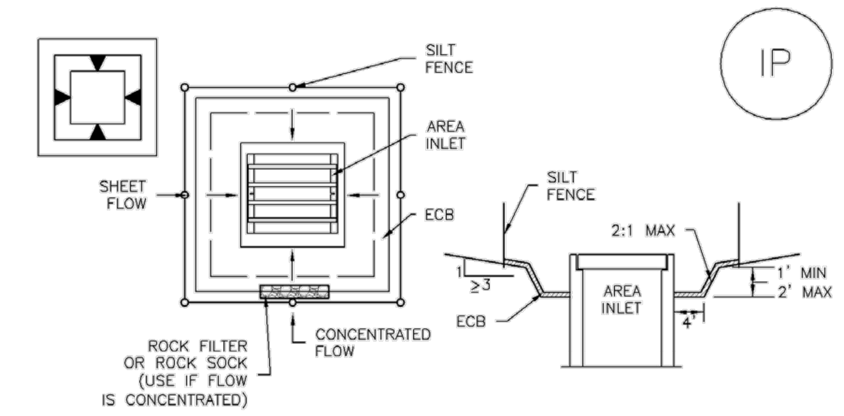

IP-5. OVEREXCAVATION INLET PROTECTION

OVEREXCAVATION INLET PROTECTION INSTALLATION NOTES

1. THIS FORM OF INLET PROTECTION IS PRIMARILY APPLICABLE FOR SITES THAT HAVE NOT YET REACHED FINAL GRADE AND SHOULD BE USED ONLY FOR INLETS WITH A RELATIVELY SMALL CONTRIBUTING DRAINAGE AREA.

2. WHEN USING FOR CONCENTRATED FLOWS, SHAPE BASIN IN 2:1 RATIO WITH LENGTH ORIENTED TOWARDS DIRECTION OF FLOW.

3. SEDIMENT MUST BE PERIODICALLY REMOVED FROM THE OVEREXCAVATED AREA.

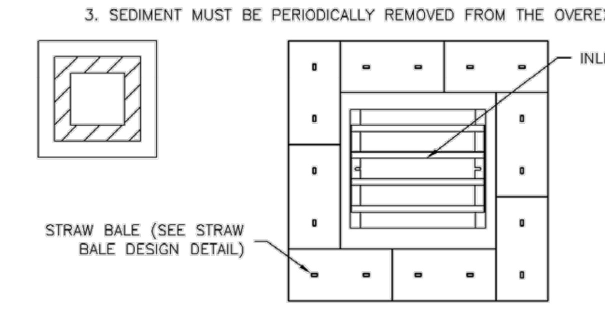

IP-6. STRAW BALE FOR SUMP INLET PROTECTION

STRAW BALE BARRIER INLET PROTECTION INSTALLATION NOTES

1. SEE STRAW BALE DESIGN DETAIL FOR INSTALLATION REQUIREMENTS.

2. BALES SHALL BE PLACED IN A SINGLE ROW AROUND THE INLET WITH ENDS OF BALES TIGHTLY ABUTTING ONE ANOTHER.

127 S. DENVER AVE
FT. LUPTON, CO 80621
www.westernec.com
email@westernec.com
(720) 685-9951
FAX (720) 294-1330
Western Engineering Consultants, inc LLC

No.	REVISION	DATE	BY
0	PRELIM/FINAL PLAT SUBMITTAL	08/06/19	CFC

KEENE LAND, LLC
CONTACT: RICK ROBERTSON
8537 WCR 51
KEENESBURG, CO 80643
(303)961-0031

EROSION CONTROL DETAILS
MARKET STREET BUSINESS PARK SUBDIVISION
TOWN of KEENESBURG, WELD COUNTY, COLORADO

Dig Safely. CALL UNCC THREE WORKING DAYS BEFORE YOU DIG 811 www.uncc.org UTILITY NOTIFICATION CENTER OF COLORADO

COLORADO REGISTERED PROFESSIONAL ENGINEER 33802 REVIEW ONLY 08/06/19
ONLY VALID FOR CONSTRUCTION IF SEAL & ORIGINAL SIGNATURE ARE ON EACH SHEET

INITIAL PLAN RELEASE: 08/06/19
DESIGNED BY: CFC
DRAWN BY: CFC
CHECKED BY: CFC
PROJECT NO. 01-0187.003.00
DOC CON # C6.04-ECDTL
SHT C6.04

T:\0187_003_00-KEENE LAND-MARKET BUS PARK\Dwg\CD\s\0187_003-WECI-CDS-6.00.dwg, C6.04-ECDTLS, 8/16/2019 11:52:56 AM, , DWG To PDF.pc3, WEC 24"36, WEC 24"36

Inlet Protection (IP) SC-6

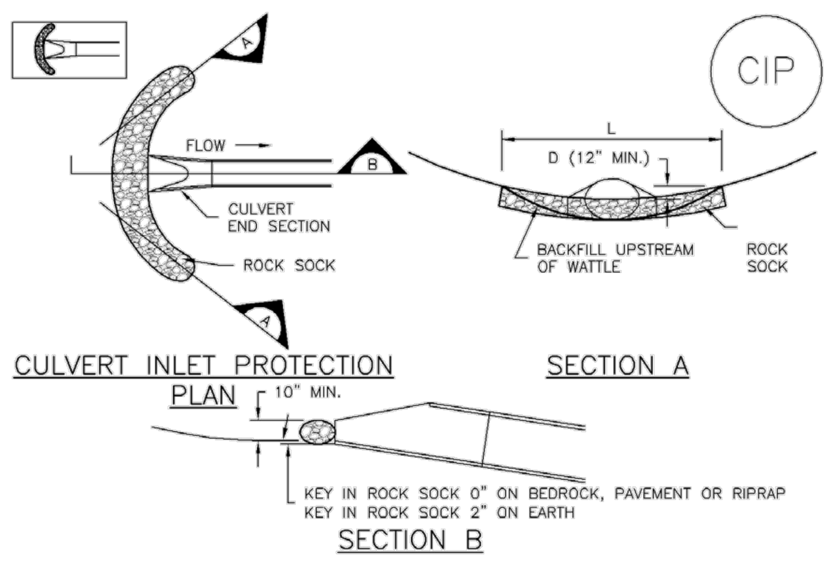

CIP–1. CULVERT INLET PROTECTION

CULVERT INLET PROTECTION INSTALLATION NOTES

1. SEE PLAN VIEW FOR
   –LOCATION OF CULVERT INLET PROTECTION.

2. SEE ROCK SOCK DESIGN DETAIL FOR ROCK GRADATION REQUIREMENTS AND JOINTING DETAIL.

CULVERT INLET PROTECTION MAINTENANCE NOTES

1. INSPECT BMPs EACH WORKDAY, AND MAINTAIN THEM IN EFFECTIVE OPERATING CONDITION. MAINTENANCE OF BMPs SHOULD BE PROACTIVE, NOT REACTIVE. INSPECT BMPs AS SOON AS POSSIBLE (AND ALWAYS WITHIN 24 HOURS) FOLLOWING A STORM THAT CAUSES SURFACE EROSION, AND PERFORM NECESSARY MAINTENANCE.

2. FREQUENT OBSERVATIONS AND MAINTENANCE ARE NECESSARY TO MAINTAIN BMPs IN EFFECTIVE OPERATING CONDITION. INSPECTIONS AND CORRECTIVE MEASURES SHOULD BE DOCUMENTED THOROUGHLY.

3. WHERE BMPs HAVE FAILED, REPAIR OR REPLACEMENT SHOULD BE INITIATED UPON DISCOVERY OF THE FAILURE.

4. SEDIMENT ACCUMULATED UPSTREAM OF THE CULVERT SHALL BE REMOVED WHEN THE SEDIMENT DEPTH IS ½ THE HEIGHT OF THE ROCK SOCK.

5. CULVERT INLET PROTECTION SHALL REMAIN IN PLACE UNTIL THE UPSTREAM DISTURBED AREA IS PERMANENTLY STABILIZED AND APPROVED BY THE LOCAL JURISDICTION.

(DETAILS ADAPTED FROM AURORA, COLORADO, NOT AVAILABLE IN AUTOCAD)

NOTE: MANY JURISDICTIONS HAVE BMP DETAILS THAT VARY FROM UDFCD STANDARD DETAILS. CONSULT WITH LOCAL JURISDICTIONS AS TO WHICH DETAIL SHOULD BE USED WHEN DIFFERENCES ARE NOTED.

SC-6 Inlet Protection (IP)

GENERAL INLET PROTECTION INSTALLATION NOTES

1. SEE PLAN VIEW FOR:
   –LOCATION OF INLET PROTECTION.
   –TYPE OF INLET PROTECTION (IP.1, IP.2, IP.3, IP.4, IP.5, IP.6)

2. INLET PROTECTION SHALL BE INSTALLED PROMPTLY AFTER INLET CONSTRUCTION OR PAVING IS COMPLETE (TYPICALLY WITHIN 48 HOURS). IF A RAINFALL/RUNOFF EVENT IS FORECAST, INSTALL INLET PROTECTION PRIOR TO ONSET OF EVENT.

3. MANY JURISDICTIONS HAVE BMP DETAILS THAT VARY FROM UDFCD STANDARD DETAILS. CONSULT WITH LOCAL JURISDICTIONS AS TO WHICH DETAIL SHOULD BE USED WHEN DIFFERENCES ARE NOTED.

INLET PROTECTION MAINTENANCE NOTES

1. INSPECT BMPs EACH WORKDAY, AND MAINTAIN THEM IN EFFECTIVE OPERATING CONDITION. MAINTENANCE OF BMPs SHOULD BE PROACTIVE, NOT REACTIVE. INSPECT BMPs AS SOON AS POSSIBLE (AND ALWAYS WITHIN 24 HOURS) FOLLOWING A STORM THAT CAUSES SURFACE EROSION, AND PERFORM NECESSARY MAINTENANCE.

2. FREQUENT OBSERVATIONS AND MAINTENANCE ARE NECESSARY TO MAINTAIN BMPs IN EFFECTIVE OPERATING CONDITION. INSPECTIONS AND CORRECTIVE MEASURES SHOULD BE DOCUMENTED THOROUGHLY.

3. WHERE BMPs HAVE FAILED, REPAIR OR REPLACEMENT SHOULD BE INITIATED UPON DISCOVERY OF THE FAILURE.

4. SEDIMENT ACCUMULATED UPSTREAM OF INLET PROTECTION SHALL BE REMOVED AS NECESSARY TO MAINTAIN BMP EFFECTIVENESS, TYPICALLY WHEN STORAGE VOLUME REACHES 50% OF CAPACITY, A DEPTH OF 6" WHEN SILT FENCE IS USED, OR ¼ OF THE HEIGHT FOR STRAW BALES.

5. INLET PROTECTION IS TO REMAIN IN PLACE UNTIL THE UPSTREAM DISTURBED AREA IS PERMANENTLY STABILIZED, UNLESS THE LOCAL JURISDICTION APPROVES EARLIER REMOVAL OF INLET PROTECTION IN STREETS.

6. WHEN INLET PROTECTION AT AREA INLETS IS REMOVED, THE DISTURBED AREA SHALL BE COVERED WITH TOP SOIL, SEEDED AND MULCHED, OR OTHERWISE STABILIZED IN A MANNER APPROVED BY THE LOCAL JURISDICTION.

(DETAIL ADAPTED FROM TOWN OF PARKER, COLORADO AND CITY OF AURORA, COLORADO, NOT AVAILABLE IN AUTOCAD)

NOTE: MANY JURISDICTIONS HAVE BMP DETAILS THAT VARY FROM UDFCD STANDARD DETAILS. CONSULT WITH LOCAL JURISDICTIONS AS TO WHICH DETAIL SHOULD BE USED WHEN DIFFERENCES ARE NOTED.

NOTE: THE DETAILS INCLUDED WITH THIS FACT SHEET SHOW COMMONLY USED, CONVENTIONAL METHODS OF INLET PROTECTION IN THE DENVER METROPOLITAN AREA. THERE ARE MANY PROPRIETARY INLET PROTECTION METHODS ON THE MARKET. UDFCD NEITHER ENDORSES NOR DISCOURAGES USE OF PROPRIETARY INLET PROTECTION; HOWEVER, IN THE EVENT PROPRIETARY METHODS ARE USED, THE APPROPRIATE DETAIL FROM THE MANUFACTURER MUST BE INCLUDED IN THE SWMP AND THE BMP MUST BE INSTALLED AND MAINTAINED AS SHOWN IN THE MANUFACTURER'S DETAILS.

NOTE: SOME MUNICIPALITIES DISCOURAGE OR PROHIBIT THE USE OF STRAW BALES FOR INLET PROTECTION. CHECK WITH LOCAL JURISDICTION TO DETERMINE IF STRAW BALE INLET PROTECTION IS ACCEPTABLE.

Sediment Control Log (SCL) SC-2

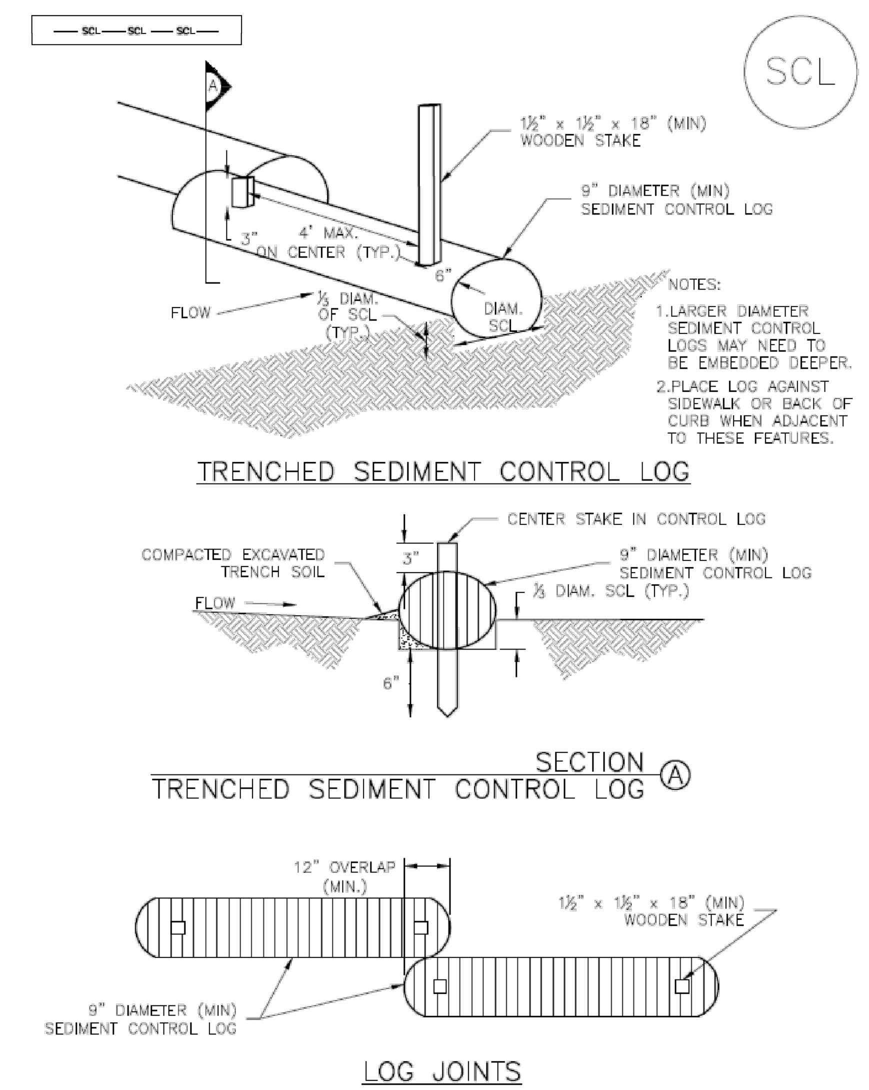

SCL–1. TRENCHED SEDIMENT CONTROL LOG

SC-2 Sediment Control Log (SCL)

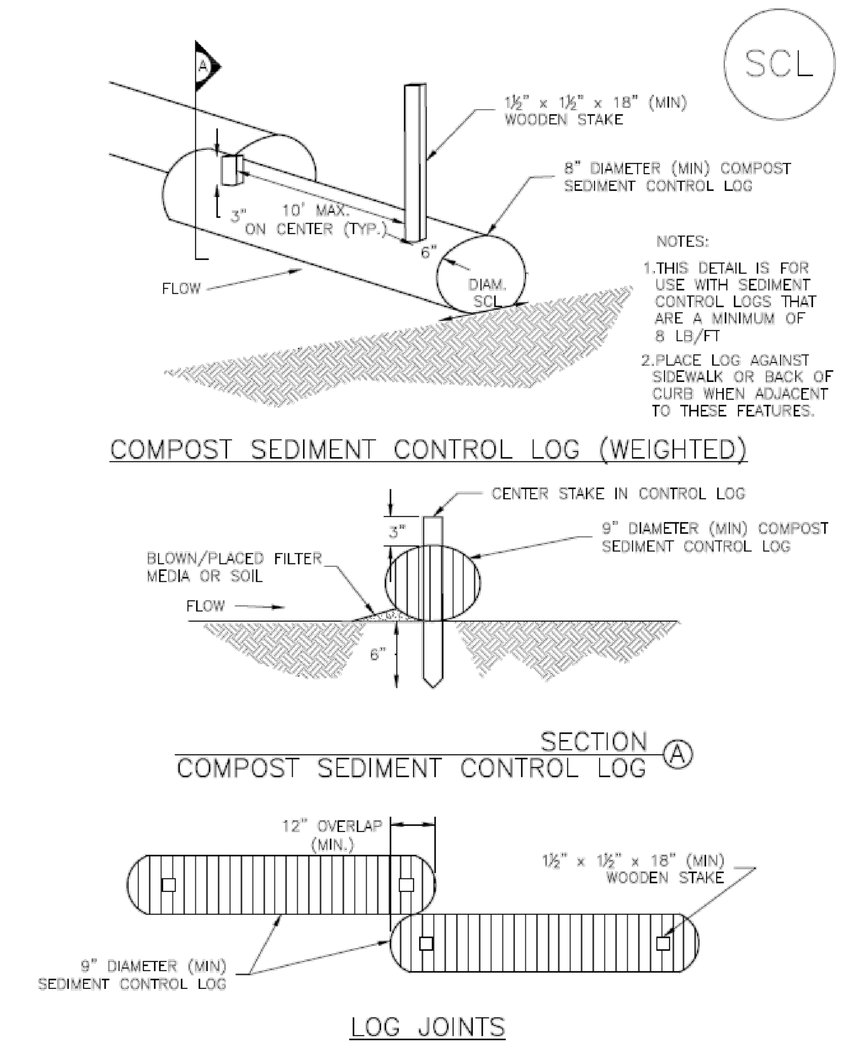

SCL–2. COMPOST SEDIMENT CONTROL LOG (WEIGHTED)

Sediment Control Log (SCL) SC-2

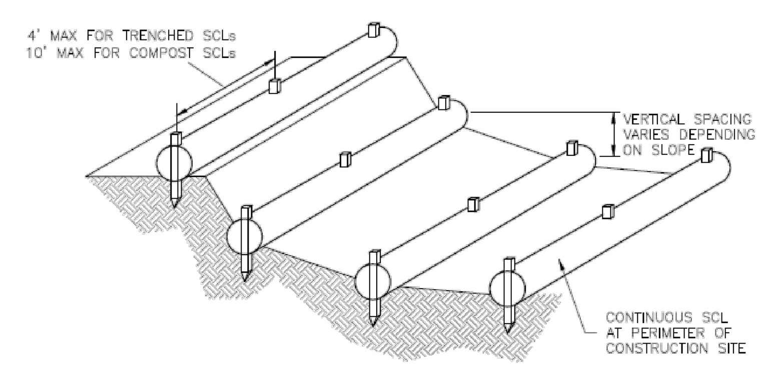

SCL–3. SEDIMENT CONTROL LOGS TO CONTROL SLOPE LENGTH

SC-2 Sediment Control Log (SCL)

SEDIMENT CONTROL LOG INSTALLATION NOTES

1. SEE PLAN VIEW FOR LOCATION AND LENGTH OF SEDIMENT CONTROL LOGS.

2. SEDIMENT CONTROL LOGS THAT ACT AS A PERIMETER CONTROL SHALL BE INSTALLED PRIOR TO ANY UPGRADIENT LAND–DISTURBING ACTIVITIES.

3. SEDIMENT CONTROL LOGS SHALL CONSIST OF STRAW, COMPOST, EXCELSIOR OR COCONUT FIBER, AND SHALL BE FREE OF ANY NOXIOUS WEED SEEDS OR DEFECTS INCLUDING RIPS, HOLES AND OBVIOUS WEAR.

4. SEDIMENT CONTROL LOGS MAY BE USED AS SMALL CHECK DAMS IN DITCHES AND SWALES. HOWEVER, THEY SHOULD NOT BE USED IN PERENNIAL STREAMS.

5. IT IS RECOMMENDED THAT SEDIMENT CONTROL LOGS BE TRENCHED INTO THE GROUND TO A DEPTH OF APPROXIMATELY ⅓ OF THE DIAMETER OF THE LOG. IF TRENCHING TO THIS DEPTH IS NOT FEASIBLE AND/OR DESIRABLE (SHORT TERM INSTALLATION WITH DESIRE NOT TO DAMAGE LANDSCAPE) A LESSER TRENCHING DEPTH MAY BE ACCEPTABLE WITH MORE ROBUST STAKING. COMPOST LOGS THAT ARE 8 LB/FT DO NOT NEED TO BE TRENCHED.

6. THE UPHILL SIDE OF THE SEDIMENT CONTROL LOG SHALL BE BACKFILLED WITH SOIL OR FILTER MATERIAL THAT IS FREE OF ROCKS AND DEBRIS. THE SOIL SHALL BE TIGHTLY COMPACTED INTO THE SHAPE OF A RIGHT TRIANGLE USING A SHOVEL OR WEIGHTED LAWN ROLLER OR BLOWN IN PLACE.

7. FOLLOW MANUFACTURERS' GUIDANCE FOR STAKING. IF MANUFACTURERS' INSTRUCTIONS DO NOT SPECIFY SPACING, STAKES SHALL BE PLACED ON 4' CENTERS AND EMBEDDED A MINIMUM OF 6" INTO THE GROUND. 3" OF THE STAKE SHALL PROTRUDE FROM THE TOP OF THE LOG. STAKES THAT ARE BROKEN PRIOR TO INSTALLATION SHALL BE REPLACED. COMPOST LOGS SHOULD BE STAKED 10' ON CENTER.

SEDIMENT CONTROL LOG MAINTENANCE NOTES

1. INSPECT BMPs EACH WORKDAY, AND MAINTAIN THEM IN EFFECTIVE OPERATING CONDITION. MAINTENANCE OF BMPs SHOULD BE PROACTIVE, NOT REACTIVE. INSPECT BMPs AS SOON AS POSSIBLE (AND ALWAYS WITHIN 24 HOURS) FOLLOWING A STORM THAT CAUSES SURFACE EROSION, AND PERFORM NECESSARY MAINTENANCE.

2. FREQUENT OBSERVATIONS AND MAINTENANCE ARE NECESSARY TO MAINTAIN BMPs IN EFFECTIVE OPERATING CONDITION. INSPECTIONS AND CORRECTIVE MEASURES SHOULD BE DOCUMENTED THOROUGHLY.

3. WHERE BMPs HAVE FAILED, REPAIR OR REPLACEMENT SHOULD BE INITIATED UPON DISCOVERY OF THE FAILURE.

4. SEDIMENT ACCUMULATED UPSTREAM OF SEDIMENT CONTROL LOG SHALL BE REMOVED AS NEEDED TO MAINTAIN FUNCTIONALITY OF THE BMP, TYPICALLY WHEN DEPTH OF ACCUMULATED SEDIMENTS IS APPROXIMATELY ½ OF THE HEIGHT OF THE SEDIMENT CONTROL LOG.

5. SEDIMENT CONTROL LOG SHALL BE REMOVED AT THE END OF CONSTRUCTION.COMPOST FROM COMPOST LOGS MAY BE LEFT IN PLACE AS LONG AS BAGS ARE REMOVED AND THE AREA SEEDED. IF DISTURBED AREAS EXIST AFTER REMOVAL, THEY SHALL BE COVERED WITH TOP SOIL, SEEDED AND MULCHED OR OTHERWISE STABILIZED IN A MANNER APPROVED BY THE LOCAL JURISDICTION.

(DETAILS ADAPTED FROM TOWN OF PARKER, COLORADO, JEFFERSON COUNTY, COLORADO, DOUGLAS COUNTY, COLORADO, AND CITY OF AURORA, COLORADO, NOT AVAILABLE IN AUTOCAD)

NOTE: MANY JURISDICTIONS HAVE BMP DETAILS THAT VARY FROM UDFCD STANDARD DETAILS. CONSULT WITH LOCAL JURISDICTIONS AS TO WHICH DETAIL SHOULD BE USED WHEN DIFFERENCES ARE NOTED.

Street Sweeping and Vacuuming (SS) SM-7

Description

Street sweeping and vacuuming remove sediment that has been tracked onto roadways to reduce sediment transport into storm drain systems or a surface waterway.

Photograph SS-1. A street sweeper removes sediment and potential pollutants along the curb line at a construction site. Photo courtesy of Tom Gore.

Appropriate Uses

Use this practice at construction sites where vehicles may track sediment offsite onto paved roadways.

Design and Installation

Street sweeping or vacuuming should be conducted when there is noticeable sediment accumulation on roadways adjacent to the construction site. Typically, this will be concentrated at the entrance/exit to the construction site. Well-maintained stabilized construction entrances, vehicle tracking controls and tire wash facilities can help reduce the necessary frequency of street sweeping and vacuuming.

On smaller construction sites, street sweeping can be conducted manually using a shovel and broom. Never wash accumulated sediment on roadways into storm drains.

Maintenance and Removal

- Inspect paved roads around the perimeter of the construction site on a daily basis and more frequently, as needed. Remove accumulated sediment, as needed.
- Following street sweeping, check inlet protection that may have been displaced during street sweeping.
- Inspect area to be swept for materials that may be hazardous prior to beginning sweeping operations.

Street Sweeping/ Vacuuming	
Functions	
Erosion Control	No
Sediment Control	Yes
Site/Material Management	Yes

Good Housekeeping Practices (GH) MM-3

Description

Implement construction site good housekeeping practices to prevent pollution associated with solid, liquid and hazardous construction-related materials and wastes. Stormwater Management Plans (SWMPs) should clearly specify BMPs including these good housekeeping practices:

- Provide for waste management.
- Establish proper building material staging areas.
- Designate paint and concrete washout areas.
- Establish proper equipment/vehicle fueling and maintenance practices.
- Control equipment/vehicle washing and allowable non-stormwater discharges.
- Develop a spill prevention and response plan.

Acknowledgement: This Fact Sheet is based directly on EPA guidance provided in *Developing Your Stormwater Pollution Prevent Plan* (EPA 2007).

Photographs GH-1 and GH-2. Proper materials storage and secondary containment for fuel tanks are important good housekeeping practices. Photos courtesy of CDOT and City of Aurora.

Appropriate Uses

Good housekeeping practices are necessary at all construction sites.

Design and Installation

The following principles and actions should be addressed in SWMPs:

- **Provide for Waste Management.** Implement management procedures and practices to prevent or reduce the exposure and transport of pollutants in stormwater from solid, liquid and sanitary wastes that will be generated at the site. Practices such as trash disposal, recycling, proper material handling, and cleanup measures can reduce the potential for stormwater runoff to pick up construction site wastes and discharge them to surface waters. Implement a comprehensive set of waste-management practices for hazardous or toxic materials, such as paints, solvents, petroleum products, pesticides, wood preservatives, acids, roofing tar, and other materials. Practices should include storage, handling, inventory, and cleanup procedures, in case of spills. Specific practices that should be considered include:

  Solid or Construction Waste

  - Designate trash and bulk waste-collection areas on-site.

Good Housekeeping	
Functions	
Erosion Control	No
Sediment Control	No
Site/Material Management	Yes

127 S. DENVER AVE
FT. LUPTON, CO 80621
www.westerneci.com
email@westerneci.com
(720) 685-9951
FAX (720) 294-1330
Western Engineering Consultants, inc LLC

No.	REVISION	DATE	BY
0	PRELIM/FINAL PLAT SUBMITTAL	08/06/19	CFC

KEENE LAND, LLC
CONTACT: RICK ROBERTSON
8537 WCR 51
KEENESBURG, CO 80643
(303)961-0031

EROSION CONTROL DETAILS
MARKET STREET BUSINESS PARK SUBDIVISION
TOWN of KEENESBURG, WELD COUNTY, COLORADO

Dig Safely. CALL UNCC
THREE WORKING DAYS BEFORE YOU DIG
811
www.uncc.org
UTILITY NOTIFICATION CENTER OF COLORADO

COLORADO REGISTERED PROFESSIONAL ENGINEER
CHADWIN F. COX
FOR 33802 REVIEW ONLY 08/06/19
ONLY VALID FOR CONSTRUCTION IF SEAL & ORIGINAL SIGNATURE ARE ON EACH SHEET

INITIAL PLAN RELEASE: 08/06/19
DESIGNED BY: CFC
DRAWN BY: CFC
CHECKED BY: CFC
PROJECT NO. 01-0187.003.00
DOC CON # C6.05-ECDTL
SHT C6.05

T:\0187_003_00-KEENE LAND-MARKET BUS PARK\Dwg\CD\s\0187_003-WECI-CDS-6.00.dwg, C6.05-ECDTLS, 8/16/2019 11:53:01 AM, _DWG To PDF.pc3, WEC 24"36, WEC 24"36

- Recycle materials whenever possible (e.g., paper, wood, concrete, oil).
- Segregate and provide proper disposal options for hazardous material wastes.
- Clean up litter and debris from the construction site daily.
- Locate waste-collection areas away from streets, gutters, watercourses, and storm drains. Waste-collection areas (dumpsters, and such) are often best located near construction site entrances to minimize traffic on disturbed soils. Consider secondary containment around waste collection areas to minimize the likelihood of contaminated discharges.
- Empty waste containers before they are full and overflowing.

Sanitary and Septic Waste

- Provide convenient, well-maintained, and properly located toilet facilities on-site.
- Locate toilet facilities away from storm drain inlets and waterways to prevent accidental spills and contamination of stormwater.
- Maintain clean restroom facilities and empty portable toilets regularly.
- Where possible, provide secondary containment pans under portable toilets.
- Provide tie-downs or stake-downs for portable toilets.
- Educate employees, subcontractors, and suppliers on locations of facilities.
- Treat or dispose of sanitary and septic waste in accordance with state or local regulations. Do not discharge or bury wastewater at the construction site.
- Inspect facilities for leaks. If found, repair or replace immediately.
- Special care is necessary during maintenance (pump out) to ensure that waste and/or biocide are not spilled on the ground.

Hazardous Materials and Wastes

- Develop and implement employee and subcontractor education, as needed, on hazardous and toxic waste handling, storage, disposal, and cleanup.
- Designate hazardous waste-collection areas on-site.
- Place all hazardous and toxic material wastes in secondary containment.

Photograph GH-3. Locate portable toilet facilities on level surfaces away from waterways and storm drains. Photo courtesy of WWE.

- Hazardous waste containers should be inspected to ensure that all containers are labeled properly and that no leaks are present.

- **Establish Proper Building Material Handling and Staging Areas.** The SWMP should include comprehensive handling and management procedures for building materials, especially those that are hazardous or toxic. Paints, solvents, pesticides, fuels and oils, other hazardous materials or building materials that have the potential to contaminate stormwater should be stored indoors or under cover whenever possible or in areas with secondary containment. Secondary containment measures prevent a spill from spreading across the site and may include dikes, berms, curbing, or other containment methods. Secondary containment techniques should also ensure the protection of groundwater. Designate staging areas for activities such as fueling vehicles, mixing paints, plaster, mortar, and other potential pollutants. Designated staging areas enable easier monitoring of the use of materials and clean up of spills. Training employees and subcontractors is essential to the success of this pollution prevention principle. Consider the following specific materials handling and staging practices:
  - Train employees and subcontractors in proper handling and storage practices.
  - Clearly designate site areas for staging and storage with signs and on construction drawings. Staging areas should be located in areas central to the construction site. Segment the staging area into sub-areas designated for vehicles, equipment, or stockpiles. Construction entrances and exits should be clearly marked so that delivery vehicles enter/exit through stabilized areas with vehicle tracking controls (See Vehicle Tracking Control Fact Sheet).
  - Provide storage in accordance with Spill Protection, Control and Countermeasures (SPCC) requirements and plans and provide cover and impermeable perimeter control, as necessary, for hazardous materials and contaminated soils that must be stored on site.
  - Ensure that storage containers are regularly inspected for leaks, corrosion, support or foundation failure, or other signs of deterioration and tested for soundness.
  - Reuse and recycle construction materials when possible.

- **Designate Concrete Washout Areas.** Concrete contractors should be encouraged to use the washout facilities at their own plants or dispatch facilities when feasible; however, concrete washout commonly occurs on construction sites. If it is necessary to provide for concrete washout areas on-site, designate specific washout areas and design facilities to handle anticipated washout water. Washout areas should also be provided for paint and stucco operations. Because washout areas can be a source of pollutants from leaks or spills, care must be taken with regard to their placement and proper use. See the Concrete Washout Area Fact Sheet for detailed guidance.

  Both self-constructed and prefabricated washout containers can fill up quickly when concrete, paint, and stucco work are occurring on large portions of the site. Be sure to check for evidence that contractors are using the washout areas and not dumping materials onto the ground or into drainage facilities. If the washout areas are not being used regularly, consider posting additional signage, relocating the facilities to more convenient locations, or providing training to workers and contractors.

  When concrete, paint, or stucco is part of the construction process, consider these practices which will help prevent contamination of stormwater. Include the locations of these areas and the maintenance and inspection procedures in the SWMP.

  - Do not washout concrete trucks or equipment into storm drains, streets, gutters, uncontained areas, or streams. Only use designated washout areas.
  - Establish washout areas and advertise their locations with signs. Ensure that signage remains in good repair.
  - Provide adequate containment for the amount of wash water that will be used.
  - Inspect washout structures daily to detect leaks or tears and to identify when materials need to be removed.
  - Dispose of materials properly. The preferred method is to allow the water to evaporate and to recycle the hardened concrete. Full service companies may provide dewatering services and should dispose of wastewater properly. Concrete wash water can be highly polluted. It should not be discharged to any surface water, storm sewer system, or allowed to infiltrate into the ground in the vicinity of waterbodies. Washwater should not be discharged to a sanitary sewer system without first receiving written permission from the system operator.

- **Establish Proper Equipment/Vehicle Fueling and Maintenance Practices.** Create a clearly designated on-site fueling and maintenance area that is clean and dry. The on-site fueling area should have a spill kit, and staff should know how to use it. If possible, conduct vehicle fueling and maintenance activities in a covered area. Consider the following practices to help prevent the discharge of pollutants to stormwater from equipment/vehicle fueling and maintenance. Include the locations of designated fueling and maintenance areas and inspection and maintenance procedures in the SWMP.
  - Train employees and subcontractors in proper fueling procedures (stay with vehicles during fueling, proper use of pumps, emergency shutoff valves, etc.).
  - Inspect on-site vehicles and equipment regularly for leaks, equipment damage, and other service problems.
  - Clearly designate vehicle/equipment service areas away from drainage facilities and watercourses to prevent stormwater run-on and runoff.
  - Use drip pans, drip cloths, or absorbent pads when replacing spent fluids.
  - Collect all spent fluids, store in appropriate labeled containers in the proper storage areas, and recycle fluids whenever possible.

- **Control Equipment/Vehicle Washing and Allowable Non-Stormwater Discharges.** Implement practices to prevent contamination of surface and groundwater from equipment and vehicle wash water. Representative practices include:
  - Educate employees and subcontractors on proper washing procedures.
  - Use off-site washing facilities, when available.
  - Clearly mark the washing areas and inform workers that all washing must occur in this area.
  - Contain wash water and treat it using BMPs. Infiltrate washwater when possible, but maintain separation from drainage paths and waterbodies.

  - Use high-pressure water spray at vehicle washing facilities without detergents. Water alone can remove most dirt adequately.
  - Do not conduct other activities, such as vehicle repairs, in the wash area.
  - Include the location of the washing facilities and the inspection and maintenance procedures in the SWMP.

- **Develop a Spill Prevention and Response Plan.** Spill prevention and response procedures must be identified in the SWMP. Representative procedures include identifying ways to reduce the chance of spills, stop the source of spills, contain and clean up spills, dispose of materials contaminated by spills, and train personnel responsible for spill prevention and response. The plan should also specify material handling procedures and storage requirements and ensure that clear and concise spill cleanup procedures are provided and posted for areas in which spills may potentially occur. When developing a spill prevention plan, include the following:
  - Note the locations of chemical storage areas, storm drains, tributary drainage areas, surface waterbodies on or near the site, and measures to stop spills from leaving the site.
  - Provide proper handling and safety procedures for each type of waste. Keep Material Safety Data Sheets (MSDSs) for chemical used on site with the SWMP.
  - Establish an education program for employees and subcontractors on the potential hazards to humans and the environment from spills and leaks.
  - Specify how to notify appropriate authorities, such as police and fire departments, hospitals, or municipal sewage treatment facilities to request assistance. Emergency procedures and contact numbers should be provided in the SWMP and posted at storage locations.
  - Describe the procedures, equipment and materials for immediate cleanup of spills and proper disposal.
  - Identify personnel responsible for implementing the plan in the event of a spill. Update the spill prevention plan and clean up materials as changes occur to the types of chemicals stored and used at the facility.

127 S. DENVER AVE
FT. LUPTON, CO 80621
www.westerneci.com
email@westerneci.com
(720) 685-9951
FAX (720) 294-1330
Western Engineering Consultants, inc LLC

No.	REVISION	DATE	BY
0	PRELIM/FINAL PLAT SUBMITTAL	08/06/19	CFC

KEENE LAND, LLC, CONTACT: RICK ROBERTSON
8537 WCR 51
KEENESBURG, CO 80643
(303)961-0031

EROSION CONTROL DETAILS
MARKET STREET BUSINESS PARK SUBDIVISION
TOWN of KEENESBURG, WELD COUNTY, COLORADO

Dig Safely. CALL UNCC THREE WORKING DAYS BEFORE YOU DIG 811 www.uncc.org UTILITY NOTIFICATION CENTER OF COLORADO

COLORADO REGISTERED PROFESSIONAL ENGINEER 33802 FOR REVIEW ONLY 08/06/19

ONLY VALID FOR CONSTRUCTION IF SEAL & ORIGINAL SIGNATURE ARE ON EACH SHEET

INITIAL PLAN RELEASE: 08/06/19
DESIGNED BY: CFC
DRAWN BY: CFC
CHECKED BY: CFC
PROJECT NO. 01-0187.003.00
DOC CON # C6.06-ECDTL
SHT C6.06

T:\0187_003_00-KEENE LAND-MARKET BUS PARK\Dwg\CDs\0187_003-WECI-CDS-6.00.dwg, C6.06-ECDTLS, 8/6/2019 11:53:05 AM, _DWG To PDF.pc3, WEC 24"36, WEC 24"36

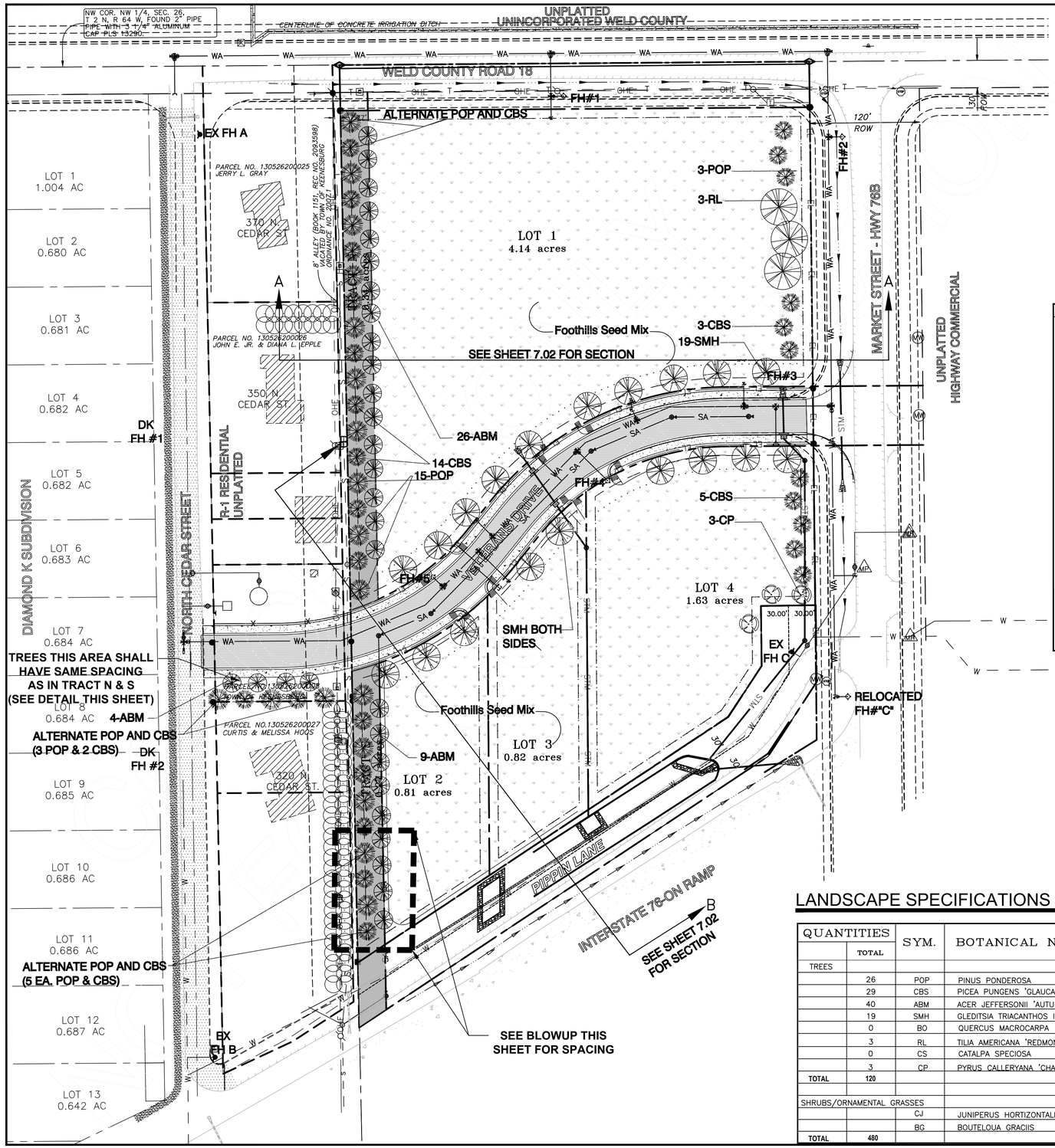

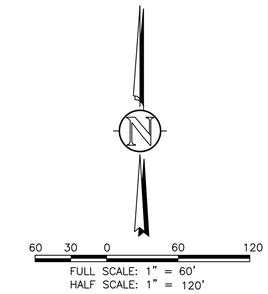

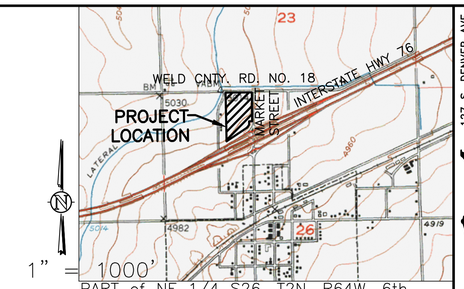

PART of NE 1/4 S26, T2N, R64W, 6th PM
SHOWN VICINITY MAP TAKEN FROM USGS QUAD – KEENESBURG 40104–A5

LANDSCAPE LEGEND

- DECIDUOUS CANOPY TREES, see table
- CONIFEROUS (EVERGREEN) TREES, see table
- DECIDUOUS ORNAMENTAL TREES, see table
- CONIFEROUS (EVERGREEN) SHRUBS, see table
- DECIDUOUS SHRUBS, see table
- PLANTING BED MULCH, Decorative Bark Edging to be Concrete Pavers or Curb where adjacent to walk or drive
- DRYLAND SEED MIX–See details sheet for seed composition and specifications.
- 10–ABM LANDSCAPE SPECIES, see table

SHRUBS NOT SHOWN ON OVERALL PLAN FOR CLARITY. FOUR (4) SHRUBS REQUIRED PER EACH SHOWN TREE.

LANDSCAPE DATA

DESCRIPTION	AREA	%
ROW	0.81 AC., 35,284 sq. ft.	9.2%
LOT #1	4.14 AC., 180,240 sq. ft.	47%
LOT #2	0.81 AC., 35,351 sq. ft.	9.2%
LOT #3	0.82 AC., 35,871sq. ft.	9.3%
LOT #4	1.63 AC., 70,974sq. ft.	18%
TRACT N	0.34 AC., 14,810 sq. ft.	3.9%
TRACT S	0.27 AC., 11,761 sq. ft.	3.1%
building coverage	0 sq. ft.	0.0%
private drive	0 sq. ft.	0.0%
conc. walks	0 sq. ft.	0.0%
parking spaces	0 sq. ft	0.0%
open space	8.01 AC., 348,915.6 sq. ft (SUM OF ALL LOTS EXCEPT ROW)	100% of total open space
TOTAL	8.82 AC., 384,199.20 sq. ft.	100%

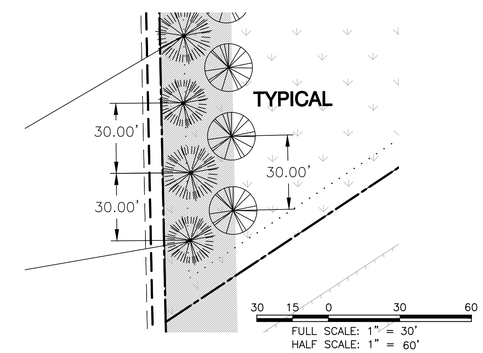

LANDSCAPE SPECIFICATIONS

QUANTITIES	TOTAL	SYM.	BOTANICAL NAME	COMMON NAME	SIZE	SPECIFICATIONS	MATURE HEIGHT	SPREAD
TREES								
	26	POP	PINUS PONDEROSA	PONDEROSA PINE	B&B	8' HEIGHT, 10' HEIGHT	60'	25'
	29	CBS	PICEA PUNGENS 'GLAUCA'	COLORADO BLUE SPRUCE	B&B	8' HEIGHT, 10' HEIGHT	60'	20'
	40	ABM	ACER JEFFERSONII 'AUTUMN BLAZE'	AUTUMN BLAZE MAPLE	B&B	2" CALIPER, HEALTHY BRANCHING	60'	20'
	19	SMH	GLEDITSIA TRIACANTHOS INRMIS 'SHADEMASTER'	SHADEMASTER HONEYLOCUST	B&B	2" CALIPER, HEALTHY BRANCHING	45'	25'
	0	BO	QUERCUS MACROCARPA	BUR OAK	B&B	2" CALIPER, HEALTHY BRANCHING	70'	50'
	3	RL	TILIA AMERICANA 'REDMOND'	REDMOND LINDEN	B&B	1–1/2" CALIPER, HEALTHY BRANCHING	70'	40'
	0	CS	CATALPA SPECIOSA	WESTERN CATALPA	B&B	1–1/2" CALIPER, HEALTHY BRANCHING	50'	30'
	3	CP	PYRUS CALLERYANA 'CHANTICLEER'	CHANTICLEER PEAR	B&B	1–1/2" CALIPER, HEALTHY BRANCHING	30'	20'
TOTAL	120							
SHRUBS/ORNAMENTAL GRASSES								
		CJ	JUNIPERUS HORTIZONTALIS	CREEPING JUNIPER	5gal		3'	3'
		BG	BOUTELOUA GRACIIS	BLUE GRAMA	2gal		2'	2'
TOTAL	480							

127 S. DENVER AVE
FT. LUPTON, CO 80621
www.westernec.com
email@westernec.com
(720) 685–9951
FAX (720) 294-1330
Western Engineering Consultants, inc LLC

No.	REVISION	DATE	BY
0	PRELIM/FINAL PLAT SUBMITTAL	08/06/19	CFC

KEENE LAND LLC
CONTACT: RICK ROBERTSON
83 W 5th
KEENESBURG, CO 80643
(303)961–0031

LANDSCAPE PLAN
MARKET STREET BUSINESS PARK SUBDIVISION
TOWN of KEENESBURG, WELD COUNTY, COLORADO

Dig Safely.
CALL UNCC
THREE WORKING DAYS BEFORE YOU DIG
811
www.uncc.org
UTILITY NOTIFICATION CENTER OF COLORADO

ONLY VALID FOR CONSTRUCTION IF SEAL & ORIGINAL SIGNATURE ARE ON EACH SHEET

INITIAL PLAN RELEASE: 08/06/19
DESIGNED BY: CFC
DRAWN BY: CFC
CHECKED BY: CFC
PROJECT NO. 01–0187.003.00
DOC CON # 7.00–LAND
SHT C7.00

T:\0187_003_00-KEENE LAND-MARKET BUS PARK\Dwg\CDs\0187_003-WECI-CDS-7.00.dwg, 7.00-LANDSCAPE, 8/16/2019 7:10:25 PM, AutoCAD PDF (High Quality Print).pc3, WEC 24'36, WEC 24'36

SEED SPECIFICATIONS

ARKANSAS VALLEY SEED
FOOTHILLS GRASS SEED–NON IRRIGATED
Application Rate: 20 lbs Per Acre/1 lb per SF

COMMON NAME	% MIXTURE
ANNUAL RYEGRASS	20%
CRESTED WHEATGRASS	10%
SLENDER WHEATGRASS	10%
HARD FESCUE	10%
CANADA BLUEGRASS	10%
BIG BLUESTEM	10%
SIDEOATS GRAMA	10%
CANADA WILDRYE	10%
BLUE GRAMA	5%
ARIZONA FESCUE	5%

SOD/SEED MIXTURE

COMMON NAME	
KENTUCKY BLUEGRASS BLEND FROM LOCAL SUPPLIER	100%

LANDSCAPE LEGEND

- DECIDUOUS CANOPY TREES, see table
- CONIFEROUS (EVERGREEN) TREES, see table
- DECIDUOUS ORNAMENTAL TREES, see table
- CONIFEROUS (EVERGREEN) SHRUBS, see table
- DECIDUOUS SHRUBS, see table
- PLANTING BED MULCH, Decorative Bark Edging to be Concrete Pavers or Curb where adjacent to walk or drive
- DRYLAND SEED MIX–See details sheet for seed composition and specifications.
- 10–ABM LANDSCAPE SPECIES, see table

LANDSCAPE NOTES

1. DEVELOPER SHALL ENSURE THAT THE LANDSCAPE PLAN IS COORDINATED WITH OTHER PLANS SUCH AS GRADING, UTILITIES, OR STORM DRAINAGE, SO CONSTRUCTION DOES NOT CONFLICT WITH INSTALLATION AND MAINTENANCE OF LANDSCAPE ELEMENTS ON THIS PLAN.

2. ALL PLANT MATERIAL SHALL MAINTAIN A MINIMUM 3' CLEAR ZONE FROM UTILITY METERS.

3. ALL TOPSOIL SHALL BE STRIPPED FROM THE SITE FOR USE ON THIS PROJECT.

4. PRIOR TO INSTALLATION OF PLANT MATERIALS, AREAS THAT HAVE BEEN COMPACTED SHALL BE THOROUGHLY LOOSENED AND ARE TO RECEIVE SOIL PREPARATION PER THE APPROPRIATE SPECIFICATIONS.

5. ALL TURF AREAS TO BE IRRIGATED WITH AN AUTOMATIC POP–UP SPRINKLER SYSTEM. ALL SHRUB BEDS TO BE IRRIGATED WITH AUTOMATIC DRIP OR SPRAY IRRIGATION SYSTEM, OR ACCEPTABLE ALTERNATIVE. THE IRRIGATION SYSTEM IS TO BE ADJUSTED TO MEET THE NEEDS OF THE INDIVIDUAL PLANT MATERIAL.

6. NO PLANTING OR IRRIGATION WILL BE ALLOWED WITHIN 3' OF ANY BUILDING FOUNDATION. DRIP IRRIGATION SHALL BE SUPPLIED TO ALL PLANT MATERIAL AROUND BUILDING FOUNDATION.

7. ALL PLANTS MATERIALS HAVE BEEN SELECTED FROM A LOW/MODERATE WATER DEMAND PLANT LIST. HIGH WATER DEMAND TURF (BLUEGRASS) HAS BEEN LOCATED IN AREAS OF HIGH PEDESTRIAN ACTIVITY. ALL PLANT GROUPINGS ARE DESIGNED ACCORDING TO THEIR WATER NEEDS TO MINIMIZE WATER USE. ALL TREES IN UN–IRRIGATED SEED AREAS SHALL BE PROVIDED DRIP IRRIGATION TO MINIMIZE WATER USE.

8. PLACEMENT OF ALL LANDSCAPING SHALL BE IN ACCORDANCE WITH THE SIGHT DISTANCE CRITERIA AS SPECIFIED BY THE TOWN OF KEENSBURG. NO STRUCTURES OR LANDSCAPE ELEMENTS GREATER THAN 24" SHALL BE ALLOWED WITHIN THE SIGHT DISTANCE TRIANGLE OR EASEMENT WITH THE EXCEPTION OF DECIDUOUS TREES PROVIDING THE LOWEST BRANCH IS AT LEAST 6' FROM GRADE. ANY FENCES WITHIN THE SIGHT DISTANCE TRIANGLE OR EASEMENT SHALL BE NO MORE THAN 42" IN HEIGHT AND OF AN OPEN DESIGN. SITE TRIANGLES ARE LOCATED AND LABELED AT ALL ENTRANCES.

9. PLANT MATERIALS AND QUANTITIES WILL CONFORM TO THE REQUIREMENTS OF THE CITY LANDSCAPE REGULATIONS. ALL PLANT MATERIALS SHALL BE IN ACCORDANCE WITH A.A.N. SPECIFICATIONS FOR NUMBER ONE GRADE. ALL TREES ARE TO BE BALLED AND BURLAPPED, CONTAINERIZED, OR IN ROOT CONTROL BAGS.

10. ALL SITE IMPROVEMENTS, INCLUDING LANDSCAPING, WILL BE INSTALLED PRIOR TO OCCUPANCY UNLESS THE DEVELOPER AND THE PLANNING DEPARTMENT AGREE TO AN ALTERNATIVE PHASING PLAN AND/OR FINANCIAL SECURITY.

11. STREET TREES SHALL BE PLANTED AN AVERAGE DISTANCE OF 30' TO 40' ON CENTER.

12. SHRUB BEDS ARE TO BE CONTAINED BY 1/8" X 4" STEEL EDGER SET WITH PINS LEVEL WITH TOP OF SOD. EDGER IS NOT REQUIRED WHEN ADJACENT TO CURBS, WALLS OR WALKS.

13. ALL PERENNIAL, ANNUAL AND GROUND COVER PLANTINGS ARE TO BE EQUALLY SPACED USING TRIANGULAR SPACING. UNLESS SHOWN AS IRREGULAR SPACING, ALL SHRUB PLANTINGS BY SPECIES ARE TO BE EQUALLY SPACED USING SPACING SHOWN ON LANDSCAPE PLANS.

14. LANDSCAPING IN FRONT OF THE ENTRY MONUMENT AND NEIGHBORHOOD IDENTIFICATION SIGNAGE SHALL NOT BLOCK THE SIGN FACE. IF NECESSARY AN APPROPRIATE SUBSTITUTE OF SHRUBS AND/OR PERENNIALS MAY BE USED.

15. ALL UTILITY EASEMENTS SHALL REMAIN UNOBSTRUCTED AND FULLY ACCESSIBLE ALONG THEIR ENTIRE LENGTH FOR MAINTENANCE EQUIPMENT ENTRY.

16. THE CONTRACTOR IS RESPONSIBLE FOR THE COST TO REPAIR UTILITIES, ADJACENT LANDSCAPE, PUBLIC AND PRIVATE PROPERTY THAT IS DAMAGED BY THE CONTRACTOR OR THEIR SUBCONTRACTOR(S)' OPERATIONS DURING INSTALLATION AND DURING THE SPECIFIED MAINTENANCE PERIOD. CALL FOR UTILITY LOCATIONS PRIOR TO ANY EXCAVATION.

17. THE CONTRACTOR SHALL BE RESPONSIBLE FOR THE REPAIR OF ANY OF THEIR TRENCHES OR EXCAVATIONS THAT SETTLE.

18. DO NOT DISTURB THE EXISTING PAVING, LIGHTING, LANDSCAPING OR IRRIGATION THAT EXISTS ADJACENT TO THE SITE UNLESS OTHERWISE NOTED ON THE PLAN.

19. PRIOR TO ISSUANCE OF BUILDING PERMITS, ANY REQUIRED LANDSCAPE IRRIGATION SYSTEM MUST BE REVIEWED AND APPROVED BY THE WATER UTILITY PROVIDER.

20. KEEP ALL TREES 10' CLEAR FROM WATER AND SANITARY SEWER SERVICES, 4' CLEAR FROM GAS LINES AND 8' CLEAR FROM ALL DRIVEWAYS.

21. IN THE EVENT THAT PLANTS SHOWN ON THE MASTER PLANT LIST ARE NOT AVAILABLE OR UNSUITABLE FOR PROPOSED LOCATION, A PLANT SIMILAR IN GROWTH HABIT AND SIZE MAY BE SUBSTITUTED.

22. ALL TREES NOT PLANTED IN TREE LAWNS SHALL BE A MINIMUM OF 5' FROM THE BACK OF WALKS IN PUBLIC R.O.W.

23. ALL LANDSCAPING PROPOSED WITH INSTALLATION, MUST BE INSTALLED OR SECURED WITH AN IRREVOCABLE LETTER OF CREDIT, PERFORMANCE BOND, OR ESCROW ACCOUNT FOR 125% OF THE VALUATION OF THE MATERIALS AND INSTALLATION PRIOR TO ISSUANCE OF A FINAL CERTIFICATE OF OCCUPANCY.

24. THE HOA WILL BE RESPONSIBLE FOR LANDSCAPE MAINTENANCE IN PUBLIC RIGHT–OF–WAY.

25. IT IS THE RESPONSIBILITY OF THE DEVELOPER AND CONTRACTOR TO BUILD THE PROJECT ACCORDING TO APPROVED PLANS AND DETAILS, AND IN ACCORDANCE WITH CURRENT TOWN DESIGN STANDARDS AND CONSTRUCTION SPECIFICATIONS. IT SHALL BE THE CONTRACTOR'S RESPONSIBILITY TO SCHEDULE A PRE–CONSTRUCTION MEETING WITH THE APPLICABLE TOWN DEPARTMENTS PRIOR TO ANY WORK COMMENCEMENT. FAILURE TO SCHEDULE THIS MEETING OR PERFORM NECESSARY FIELD INSPECTIONS DURING THE COURSE OF CONSTRUCTION SHALL IN NO WAY RELIEVE THE CONTRACTOR OF ANY OBLIGATIONS, PERFORMANCE STANDARDS OR CONSTRUCTION SPECIFICATIONS. ANY WORK THAT PROCEEDS WITHOUT THE APPROVED INSPECTION SHALL BE CORRECTED AT NO COST TO THE TOWN. IT SHALL BE THE CONTRACTOR'S RESPONSIBILITY TO BUILD THE PROJECT IN A TIME FRAME NECESSARY TO OBTAIN CONSTRUCTION ACCEPTANCE AND FINAL ACCEPTANCE DURING THE GROWING SEASON.

26. PRIOR TO INSTALLATION OF TURF GRASS AND/OR OTHER PLANT MATERIALS IN AREAS THAT HAVE BEEN COMPACTED OR DISTURBED BY CONSTRUCTION ACTIVITY, SUCH AREAS SHALL BE THOROUGHLY LOOSENED, AND ORGANIC SOIL AMENDMENTS (SUCH AS COMPOST, PEAT OR AGED MANURE) SHALL BE THOROUGHLY INCORPORATED INTO THE SOIL OF SUCH AREAS AT A RATE OF AT LEAST THREE (3) CUBIC YARDS OF SOIL AMENDMENT PER ONE THOUSAND (1,000) SQUARE FEET OF TURF GRASS AND/OR AREA TO BE PLANTED.

27. ALL LANDSCAPE AREAS ARE TO BE MULCHED WITH MIN. 4" SHREDDED CEDAR OR 1–1/2" RIVER ROCK. ALL ANNUAL AND PERENNIALS BEDS SHALL BE MULCHED WITH 2" SHREDDED CEDAR.

28. ALL PLANTS SHALL BE MAINTAINED CONTINUALLY IN A HEALTHY CONDITION IN ACCORDANCE WITH GENERALLY ACCEPTED PROFESSIONAL HORTICULTURE STANDARDS AND PRACTICES. PLANTS THAT OR ARE UNHEALTHY SHALL BE REPLACED. REGULAR PRUNING AND TRIMMING SHALL APPLY TO MAINTAIN HEALTH AND AN ATTRACTIVE APPEARANCE AND TO PERMIT THE PLANTS TO ACHIEVE THEIR INTENDED FORM AND HEIGHT. LANDSCAPE AREAS SHALL REMAIN FREE OF WEEDS, LITTER, JUNK, RUBBISH AND OTHER NUISANCES AND OBSTRUCTIONS. TO PREVENT WEED GROWTH, EROSION AND BLOWING DUST, AREAS NOT COVERED BY VEGETATION SHALL BE COVERED WITH MULCH,WOOD OR BARK CHIPS, OR DECORATIVE ROCKS OR COBBLE, OR SIMILAR NATURAL MATERIALS PROVIDING A CLEAN, UNIFORM APPEARANCE.

PLANTING DETAILS

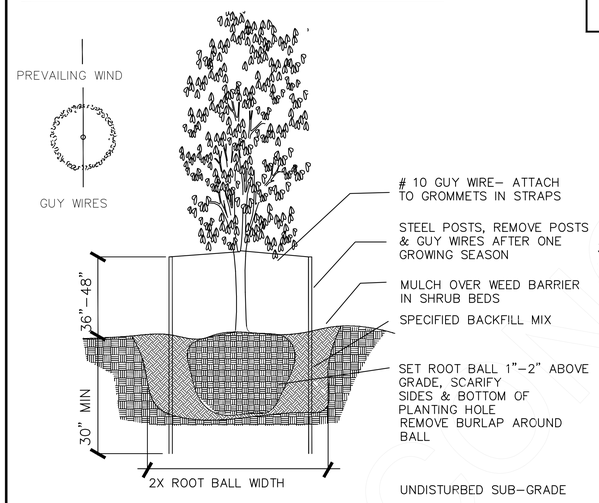

DECIDUOUS TREE PLANTING DETAIL

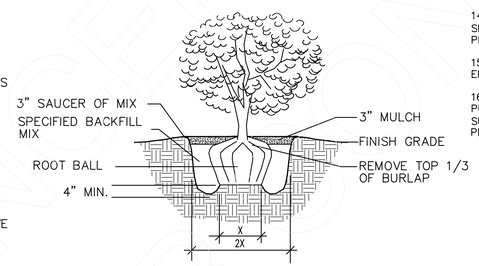

SHRUB PLANTING DETAIL

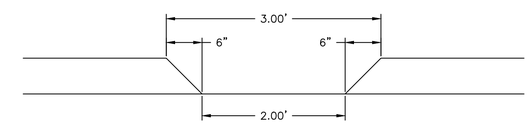

DEPRESSED CURB / CURB CUT DETAIL
SCALE 1" = 1'–0"

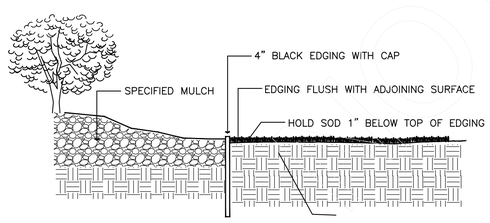

METAL EDGING DETAIL

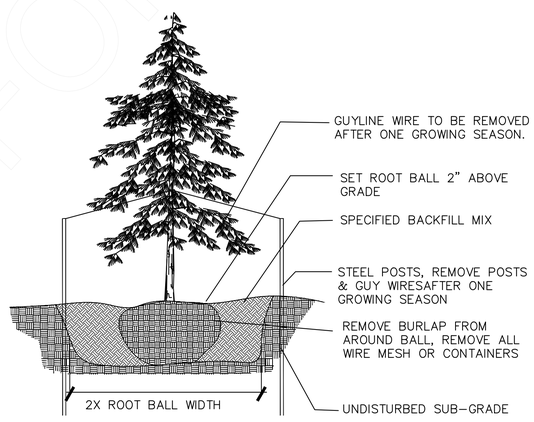

EVERGREEN TREE PLANTING DETAIL

Western Engineering Consultants, inc LLC
127 S. DENVER AVE
FT. LUPTON, CO 80621
www.westernec.com
email@westernec.com
(720) 685–9951
FAX (720) 294–1330

No.	REVISION	DATE	BY
0	PRELIM/FINAL PLAT SUBMITTAL	08/06/19	CFC

KEENE LAND LLC
CONTACT: RICK ROBERTSON
853 WEST
KEENESBURG, CO 80643
(303)961–0031

LANDSCAPE DETAILS
MARKET STREET BUSINESS PARK SUBDIVISION
TOWN of KEENESBURG, WELD COUNTY, COLORADO

Dig Safely.
CALL UNCC
THREE WORKING DAYS BEFORE YOU DIG
811
www.uncc.org
UTILITY NOTIFICATION CENTER OF COLORADO

ONLY VALID FOR CONSTRUCTION IF SEAL & ORIGINAL SIGNATURE ARE ON EACH SHEET

INITIAL PLAN RELEASE:08/06/19
DESIGNED BY: CFC
DRAWN BY: CFC
CHECKED BY: CFC
PROJECT NO: 01–0187.003.00
DOC CON #: 7.01–LANDDTL
SHT C7.01

T:\0187_003_00-KEENE LAND-MARKET BUS PARK\Dwg\CDs\0187_003-WECI-CDS-7.00.dwg, 7.01-LANDTLS, 8/16/2019 6:51:32 PM, DWG To PDF.pc3, WEC 24*36, WEC 24*36

LANDSCAPE SECTIONS

Section A

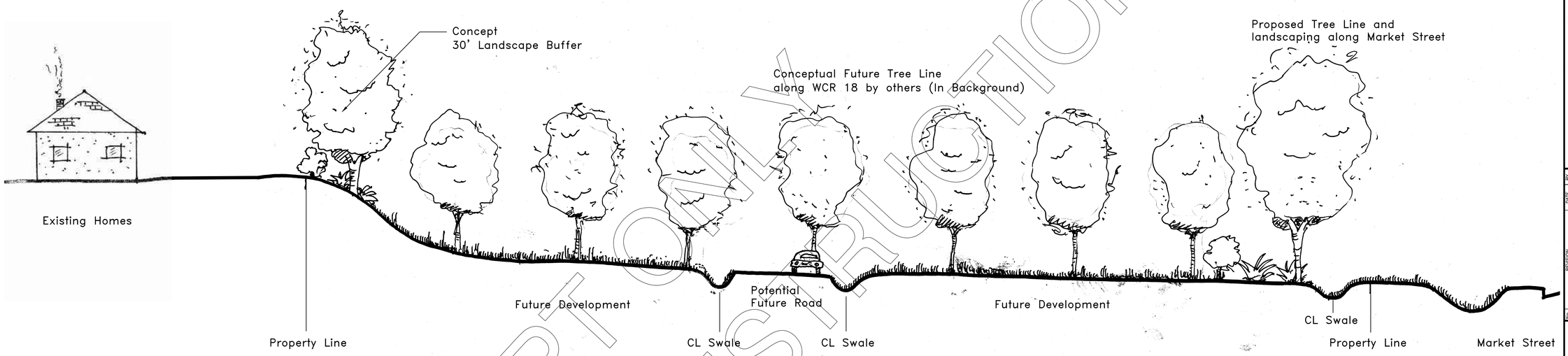

Section B

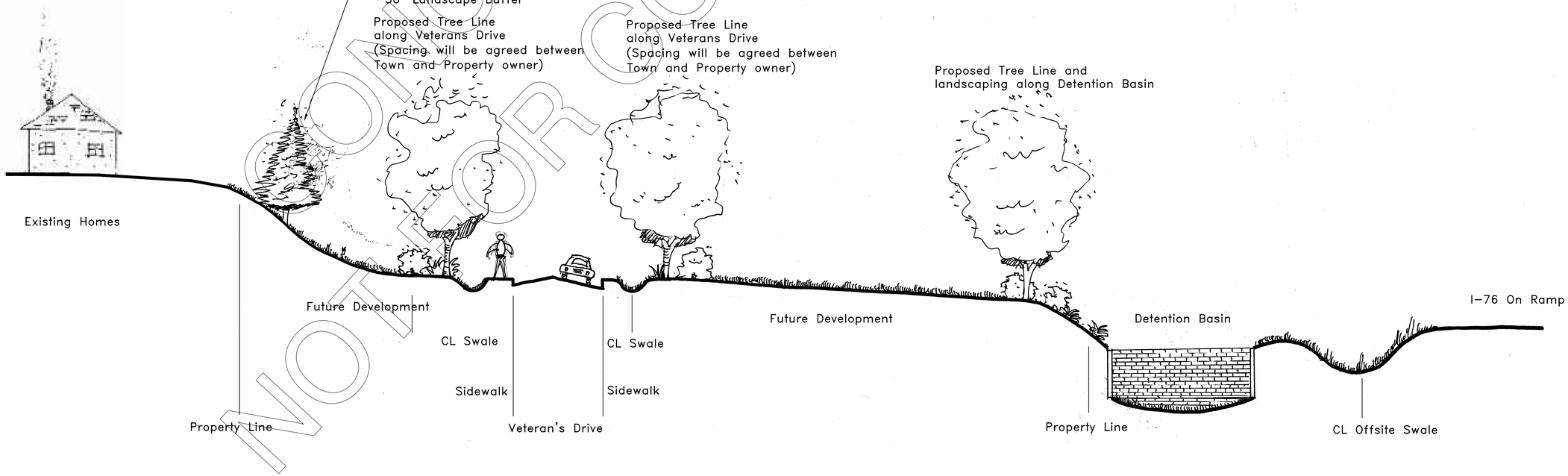

NOT FOR CONSTRUCTION
CONCEPT ONLY

Western Engineering Consultants, inc LLC
127 S. DENVER AVE
FT. LUPTON, CO 80621
www.westernec.com
email@westernec.com
(720) 685-9951
FAX (720) 294-1330

No.	REVISION	DATE	BY
0	PRELIM/FINAL PLAT SUBMITTAL	08/06/19	CFC

KEENE LAND LLC
CONTACT: RICK ROBERTSON
853 WCR 5
KEENESBURG, CO 80643
(303)961-0031

LANDSCAPE CROSS SECTIONS
MARKET STREET BUSINESS PARK SUBDIVISION
TOWN of KEENESBURG, WELD COUNTY, COLORADO

Dig Safely.
CALL UNCC
THREE WORKING DAYS BEFORE YOU DIG
811
www.uncc.org
UTILITY NOTIFICATION CENTER OF COLORADO

ONLY VALID FOR CONSTRUCTION IF SEAL & ORIGINAL SIGNATURE APPEAR ON EACH SHEET

INITIAL PLAN RELEASE: 08/06/19
DESIGNED BY: CFC
DRAWN BY: CFC
CHECKED BY: CFC
PROJECT NO. 01-0187.003.00
DOC CON # 7.02-LANDSEC
SHT C7.02

T:\0187_003_00-KEENE LAND-MARKET BUS PARK\Dwg\CDs\0187_003-WEC\-CDS-7.00.dwg, 7.02-LANDSECTION, 8/16/2019 6:51:34 PM, DWG To PDF.pc3, WEC 24"36, WEC 24"36

140 South Main Street
PO Box 312
Keenesburg, CO 80643

Phone: 303.732.4281
Fax: 303.732.0599
townofkeene@rtebb.net

TOWN OF KEENESBURG

Final Subdivision Application

Application Fee $500.00

(Plus all developer related review fees incurred by the Town of Keenesburg, i.e. legal, engineering, publication, recording fees, etc.)

Applicant Name Richard I. Robertson, Chris Bailey

Address 8537 CR 51, Keenesburg, Co 80643/ 30307 CR 8, Keenesburg CO, 80643

Mailing Address 8537 CR 51 Keenesburg CO 80643

Daytime Phone 303-961-0031 / 303-961-9216

Email pri.rickrobertson@gmail.com / chrisb@keeneconcrete.com

Subdivision Name MARKET STREET BUSINESS PARK

General Location of Proposed Subdivision 800 North Market Street, Keenesburg CO, 80643

Legal Description Attached Exhibit A

Is the Applicant the Owner of the Property? X **Yes** ____ **No**

Owner Name (if not applicant) Keene Land Holdings LLC

Owner Address 8537 County Road 51, Keenesburg, CO 80643

Owner Mailing Address 8537 County Road 51, Keenesburg, CO 80643

Owner's Phone 303-961-0031/ 303-961-9216

Owner's email pri.rickrobertson@gmail.com / chrisb@keeneconcrete.com

I agree to follow all procedures and requirements contained in the Preliminary Subdivision Plan

Applicant Signature Richard I Robertson Date 3-20-19

Owner Signature Chris Bailey Date 3-20-19

WESTERN ENGINEERING CONSULTANTS, Inc LLC
127 S. Denver Avenue, Ft. Lupton CO 80621
2501 Mill St. Brush, CO 80723
Ph. 303-913-7341, Fax 720-294-1330
Email:firstname.lastname@westerneci.com

October 7, 2019

Town of Keenesburg
140 S. Main St
Keenesburg, CO 80643

RE: MARKET STREET BUSINESS PARK DEVELOPMENT FINAL PLAT SUBMITTAL

Dear Town Staff,

Please find the attached Land Use Application and supporting documents for the Market Street Business Park Subdivision Development Final Plat submittal.

This letter is intended to serve as the Project narrative (Final Plat Checklist Item #3).

General Information and Brief Project Description:

The theme of the Market Street Business Park is to provide a Highway Commercial Zoned Business Park. Currently 4 lots are proposed.

Currently 9.46 acres are proposed to be developed into 4 business park lots. After WCR 18, Veterans Drive, and Pippen Lane right of way dedications the net developable area is approximately 8.91 acres.

The current Zoning within the Town of Keenesburg is Commercial Highway (CH). No change in zoning is proposed.

Single family residences lie to the west across the 2007 vacated alley. WCR 18 lies to the north (Ag zoning north of it), Market Street to the east (CH east of it), and Pippen Lane to the south (CDOT I 76 south of Pippen).

Owner	Keene Land Holdings, LLC 8537 CR 51 Keenesburg, CO 80643
Civil Engineer:	Western Engineering Consultants 127 South Denver Avenue Ft Lupton, Colorado 80643 303-913-7341 Chadwin Cox PE

Land Surveyor:	American West Land Surveyors 331 South 4th Avenue Brighton, Colorado 80601 303-659-1532 Curtis Hoos PLS
Traffic Engineer:	LSC. Transportation Consultants 1889 York Street Denver, CO 80206 303-333-1105 Christopher S. McGranahan, PE
Geotechnical Engineer:	InTEC 4501 Wadsworth Blvd. Wheatridge, CO 800033 303-463-9317 Douglas D. House, PE
Electrical Engineer:	To Be Determined
Drainage Engineer:	Western Engineering 127 S. Denver Avenue Ft. Lupton, Colorado 80643 303-913-7341 Chadwin Cox PE
Location of Site:	800 North Market Street, Keenesburg, CO 80643
Total Site Area:	**9.46 Acres (412,218 sf)**
Total Build-out Area:	**8.91 Acres (388,120 sf)**

TBD by Lot	Building area at buildout
TBD	Landscaping

Other Site Features:

Market Street improvements
Dedication and construction of Veterans Drive (65 foot complete right of way)
Utility extensions and looping (Veterans and WCR 18 connection to Cedar Street

COMPREHENSIVE PLAN:
The current Land Use Plan for this area shows the property as Highway Commercial use which matches the proposed and current zoning.

ZONING DISTRICT:
The existing Zone District is Commercial Highway.

DENSITY:
The maximum density will be determined as allowed by zoning code.

DIVERSITY:
The proposed lots are in demand and there is only one CDOT I 76 interchange in Keenesburg. The proposed subdivision will provide additionaldevelopment opportunities to the Town of Keenesburg.

ADJACENT LAND USES:
Single family residential to the west, AG (Weld County) to the north, Commercial Highway east, Interstate 76 and Commercial Highway south.

This Site was previously zoned for CH as it is ideal for Commercial development adjacent to the only Interstate 76 interchange that serves the Town of Keenesburg. South of the interchange lies the existing Truck Stop Restaurant and Family Dollar.

CONNECTIVITY :
The 4 lots will be directly connected to Town of Keenesburg right of way via a new Commercial/Industrial right of way road section (Veterans Drive) that will replace vacated Pippen Lane in a more favorable location for the Town and CDOT between Cedar Street and Market Street. It is the traffic engineer's determination that Veterans Drive to Market Street will be the majority of trip generations leading direct to Interstate I 76.

PUBLIC OPEN SPACE:
No public open space is proposed.

ROADWAY NETWORK:
The Town has existing roadways to the east and west (Cedar Street and Market Street respectively). A proposed new Commercial/Industrial right of way road section (Veterans Drive) will replace vacated Pippen Lane in a more favorable location for the Town and CDOT between Cedar Street and Market Street. All lots will front said Veterans Drive. It is the traffic engineer's determination that Veterans Drive to Market Street will be the majority of trip generations leading direct to Interstate I 76.

Additional improvements are expected to Market Street and will be negotiated with the Town (i.e. the current buildout cross section cannot be achieved under the I 76 overpass at this time).

TREATMENTS TO ROADWAYS
A variety of improvements to Market Street will occur and a completely new roadway (Veterans Drive) will be constructed between Market Street and Cedar Street.

LOT LAYOUT:
4-5 lots (variable sizes – ½ acre to multi acre) are proposed in Market Street Business Park.

LOT INTERFACE WITH ROADWAYS:
Each lot within Market Street Business Park will connected direct to proposed Veterans Drive which will be directly connected to Market Street near the I 76 interchange.

LOT SIZE DIVERSITY:
Since this is a Commercial subdivision there is no diversity is proposed here-in – however each lot will be individually developed so they will have diversity from each other.

SETBACKS:
The setbacks are 25 feet front and rear and 10 feet each side.

LOT SIZES ENHANCING STREETCAPE:
Lot sizes vary from just over one acre to approximately 5 acres. Each adjacent lot will include independent landscape designs that complement Veterans Drive road corridor. Currently no streetscape is proposed along the Town standard Industrial-Commercial road cross section for Veterans Drive beyond native drought resistant grasses in the 4 foot area between back of the 8 foot walk and right of way boundary. However the adjacent lots will have individual landscape designs to complement the Town public road section.

COMMON AREAS:
Currently none are proposed with this overall subdivision plan. Lot specific Common Areas will be proposed by individual lot development.

A Business Owners Association will be responsible for maintenance and irrigation of the proposed Landscape Buffers (Tracts A and B) but they will not be for public or common tenant use.

FENCING:
All site fencing is proposed to be handled by each individual lot owner in accordance with Town regulations with exception to the western most lots (1 and 4) that abut the residential lots to the west. Screened fence and a landscape buffer will be required along the west lot boundary.

AMENITIES, ENTRIES, CONNECTIVITY, ARCHITECTURAL & LANSCAPE DESIGNS FOR EACH LOT
The current amenities include proposed street, utility, lighting, grading and drainage improvements necessary to develop the infrastructure needed for lot specific development. Also included in this project will be the 30-foot landscape buffer and screening of Tracts A and B. No additional landscape beyond disturbed area seeding and native grasses within the Veterans Drive right of way is proposed as part of this project.

Each commercial highway lot development will be individually designed (landscape included). No architectural features are proposed with this public infrastructure phase for the Overall Subdivision.

IRRIGATION SYSTEM
Each lot will be required to have its own irrigation system. It is expected each lot will include varying levels of xeriscape as well to be compliant with modern water wise methodology.

Tracts A and B will be completed this project and irrigated separately from the future subdivision lots. A Business Owners Association will be responsible for maintenance and irrigation of the proposed Landscape Buffers (Tracts A and B) but they will not be for public or common tenant use.

POTABLE WATER:
Potable water does currently exist, however significant waterline improvements (re-built along Market Street, extend along WCR 18 to Cedar St, and a new watermain in Veterans Drive) will be constructed as part of this project.

ADEQUATE POTABLE WATER:
Pursuant to the Pre-Application meeting – Town of Keenesburg adequate water is said to not be an issue.

STORM WATER MANAGEMENT:
This project will detain stormwater as allowed by the Town of Keenesburg and CDOT regarding release to the CDOT right of way. In 2007 the drainage system was coordinated between the Town and CDOT and as this project moves forward it will be coordinated through the Town's review process. See also the Final Plan Utility sheet C4.02A.

COMMON AREA LANDSCAPE:
Not applicable – no Common Area is proposed this project. All landscaping is expected to be each private lot's responsibility.

The proposed 30-foot landscape screen and buffer will be completed this phase (just not as a Common Area). Said Tracts A and B will be owned, maintained, and irrigated by the Business Owners Association for this subdivision.

Individual Lot development will determine any Common Areas and associated landscape when those lots are sold or developed separate from this subdivision infrastructure project.

OFF STREET PARKING:
Based on the lot sizes no on street parking is expected and each lot will have adequate parking.

EXTERIOR LIGHTING:
The applicant is awaiting the Town's review of the public rights of way lighting. Any right of way lighting will have to adhere to standard requirement of no spill onto adjacent properties. A photometric plan was prepared and submitted. It is assumed requirements will be similar to the Diamond K project and lighting proposed on Cedar Street.

POTENTIAL IMPACT ON ADJACENT NEIGHBORHOODS:
Actual construction typically negatively effects adjacent properties, however the long-term impact of this development is estimated have little effect on the adjacent roadways and adjacent neighbors and have significant positive economic impacts to the Town.

The proposed 30-foot landscape screen and buffer Tracts A and B will minimize impact to the adjacent residences and provide noise and light reduction that does not currently exist adjacent to Interstate 76.

SMELLS:
No new smells are expected to occur.

EXISTING OR PROPOSED MINERAL DEVELOPMENT – STATE OF OWNERSHIP – CONFLICTS:
See attached report of mineral rights. No Mineral owners, neither Miner Leasehold owners were found.

PUBLIC IMPROVEMENTS:
Veterans Drive is proposed as al 60-foot public right of way with 40 feet of asphalt pavement and concrete curb and gutter.

ACCESS:
Each lot will have its own access to Veterans Drive per Keenesburg driveway details.

GRADING:
The grading design is intended to follow typical commercial development and subdivision lot grading - lot line swales draining both to the front, rear, or sides lot lines and direct all runoff to the subdivision detention pond. See also the Construction Plan Grading sheet C3.00.

STORM SEWER:
On site conveyance will be via grass swales and concrete pans. One storm pipe crossing of Veterans Drive is proposed with the initial subdivision construction. Pond release will be to the existing CDOT road culvert (under Interstate 76) that lies to the southeast of the property. Storm culverts are also expected at Veterans Drive connection to Market Street. See also the Construction Plan Utility sheet C4.02A.

SANITARY SEWER:
An existing sanitary main lie within the former alley along the west property line. A new sanitary main will be built within Veterans Drive and stubbed to each of the proposed lots in order to receive the proposed lots sewage. See also the Construction Plan Utility sheet C2.00, C2.02, and C2.03.

WATER:
Potable water does currently exist, however significant waterline improvements (re-built along Market Street, extend along WCR 18 to Cedar St, and a new watermain in Veterans Drive) will be constructed as part of this project. See also the Construction Plan Water sheet C2.01.

GAS AND ELECTRIC:
Pursuant to the Diamond K Subdivision work, Atmos appears to be the closest gas line approximately 1,300 feet away.

An electric distribution system is proposed to be buried along all the proposed Veterans Drive to serve each proposed Lot.

WILL SERVICE LETTERS:
The Owner has contacted South East Weld County Fire Rescue (SEWCFR) requesting service. A Fire Truck access analysis has been performed using SEWCR Fire Truck template.

Water and Sewer service will be provided by the Town of Keenesburg system. See also the Construction Plan Utility sheet C2.00.

Electricity is provided by United Power. Gas may be available – it is unclear if it will be provided by Xcel Energy or Atmos Energy. WEC has requested Will Serve Letters from both. See also the Construction Plan Utility sheet C2.00.

SURVEYS:
The Site topography and boundary survey was provided by American West Land Surveyors in Brighton.

SUBMITTAL & HOPEFUL PROJECT SCHEDULE:

Date:	Time/ location:	Event:	Notes:
March 25, 2019	2:00 p.m.	Submit Sketch Plat documents	
August 19, 2019	9:00a.m.	Submit Preliminary Plat documents	
August 19, 2019	9:00 a.m.	Submit Final Plat documents	
January 2020	Site	Start sitework	

FINAL PLAT APPLICATION CHECKLIST:

The following is a summary of the checklist items:

1. Completed land use application	included
2. Application fees & fee deposits	included
3. Completed land use application	included
4. Application fees & fee deposits	included
5. Written Narrative	this document
6. Title commitment	included
7. Copy of any surface agreement with mineral interest	Included
8. List of property owners within 300 feet of prop. line	Included
9. Copies of any applicable state or federal permits	Not known to be required
10. Copy of any surface use agreement w/ mineral interests	included
11. Final plat	included
12. Final Development Plan	Included
13. Draft Subdivision improvements agreement	Town of Keenesburg

Please contact me with any questions or comments you may have on our proposal for this project!

Sincerely,

Western Engineering Consultants inc., LLC
Chadwin F. Cox, P.E.
Senior Project Manager

Encl. Final Plat Application package

WESTERN ENGINEERING CONSULTANTS, Inc LLC
127 S Denver Ave. Fort Lupton, CO 80621
2501 Mill Street, Brush, CO 80723
Office: 720-685-9951
Cell. 303-913-7341, Fax 720-294-1330
Email: chadwing.cox@westerneci.com

DRAFT DEVELOPMENT PLAN

1.-COMPREHENSIVE PLAN:
The current Land Use Plan for this area shows the property as Highway Commercial use which matches the proposed and current zoning.

2. ZONING DISTRICT:
The existing Zone District is Commercial Highway.

3. DENSITY:
The maximum density will be determined as allowed by zoning code.

4. DIVERSITY:
The proposed lots are in demand and there is only one CDOT I 76 interchange in Keenesburg. The proposed subdivision will provide additionaldevelopment opportunities to the Town of Keenesburg.

5. LAND USES:
Single family residential to the west, AG (Weld County) to the north, Commercial Highway east, Interstate 76 and Commercial Highway south.

6. CONNECTIVITY:
The 4 lots will be directly connected to Town of Keenesburg right of way (Veterans Drive) and either Cedar Street or more likely Market Street and direct to Interstate I 76.

7. OPEN SPACE:
No open space is proposed.

ROADWAY NETWORK:
The Town has existing roadways to the east and west. Veterans Drive Some improvements are expected to each.

TREATMENTS TO ROADWAYS
Some improvements to Market Street will occur and a completely new roadway (Veterans Drive) will be constructed between Market Street and Cedar Street.

LOT LAYOUT:
4-5 lots (variable sizes – ½ acre to multi acre) are proposed in Market Street Business Park.

LOT INTERFACE WITH ROADWAYS:
Each lot within Market Street Business Park will connected direct to proposed Veterans Drive which will be directly connected to Market Street near the I 76 interchange.

LOT SIZE DIVERSITY:
Since this is an industrial subdivision there is no diversity is proposed here-in – however each lot will be individually developed so they will have diversity from each other.

SETBACKS:
The setbacks are 25 feet front and rear and 10 feet each side.

LOT SIZES ENHANCING STREETCAPE:
Lot sizes vary from just over one acre to approximately 5 acres.No streetscape landscape is currently proposed along the Town standard Industrial road cross section. .

COMMON AREAS:
Currently none are proposed.

FENCING:
All site fencing is proposed to be handled by each individual lot owner in accordance with Town regulations with exception to the west lots (1 and 4) that abut the residential lots to the west. Screened fence and a landscape buffer will be required along the west lot boundary.

AMENITIES, ENTRIES, CONNECTIVITY, ARCHITECTURAL & LANSCAPE DESIGNS FOR EACH LOT
Due to the size of the property – no additional amenities are proposed. Each commercial highway lot development will be individually designed (with exception to the west boundary of Lots 1 and 4 along the residential properties).

IRRIGATION SYSTEM
Each lot will be required to have its own irrigation system. It is expected each lot will include varying levels of xeriscape.

POTABLE WATER:
Potable water does currently exist, however significant waterline improvements (re-built along Market Street, extend along WCR 18 to Cedar St, and a new watermain in Veterans Drive) will be constructed as part of this project.

ADEQUATE POTABLE WATER:
Pursuant to the Pre-Application meeting – Town of Keenesburg adequate water is said to not be an issue.

STORM WATER MANAGEMENT:
This project will detain stormwater as allowed by the Town of Keenesburg and CDOT regarding release to the CDOT right of way. In 2007 the drainage system was coordinated between the Town and CDOT and as this project moves forward it will be coordinated through the Town's review process. See also the Final Plan Utility sheet C4.02A

COMMON AREA LANDSCAPE:
Not applicable. All landscaping is expected to be each private lot's responsibility, including the screening buffer to the west.

OFF STREET PARKING:
Based on the lot sizes no on street parking is expected and each lot will have adequate parking.

EXTERIOR LIGHTING:
The applicant is awaiting the Town's direction on lighting of the public rights of way. Any right of way lighting will have to adhere to standard photometric plans. It is assumed requirements will be similar to the Diamond K project and lighting proposed on Cedar Street.

POTENTIAL IMPACT ON ADJACENT NEIGHBORHOODS:
Actual construction typically negatively effects adjacent properties, however the long term impact of this development is estimated have little effect on the adjacent roadways and adjacent neighbors and have significant positive economic impacts to the Town.

SMELLS:
No new smells are expected to occur.

EXISTING OR PROPOSED MINERAL DEVELOPMENT – STATE OF OWNERSHIP – CONFLICTS:
See attached report of mineral rights. No Mineral owners, neither Miner Leasehold owners were found.

PUBLIC IMPROVEMENTS:
Veterans Drive is proposed as al 60 foot public right of way with 40 feet of asphalt pavement and concrete curb and gutter.

ACCESS:
Each lot will have its own access to Veterans Drive per Keenesburg driveway details.

GRADING:
The grading design is intended to follow typical commercial development and subdivision lot grading - lot line swales draining both to the front, rear, or sides lot lines and direct all runoff to the subdivision detention pond. See also the Final Plan Utility sheet C3.00

STORM SEWER:
On site conveyance will be via grass swales and concrete pans. One storm pipe crossing of Veterans Drive is proposed with the initial subdivision construction. Pond release will be to the existing CDOT road culvert (under Interstate 76) that lies to the southeast of the property. Storm culverts are also expected at Veterans Drive connection to Market Street. See also the Final Plan Utility sheet C4. 02A

SANITARY SEWER:
An existing sanitary main lie within the former alley along the west property line. A new sanitary main will be built within Veterans Drive and stubbed to each of the proposed lots in order to receive the proposed lots sewage. See also the Final Plan Utility sheet C2.00 an C2.03

WATER:
Potable water does currently exist, however significant waterline improvements (re-built along Market Street, extend along WCR 18 to Cedar St, and a new watermain in Veterans Drive) will be constructed as part of this project. See also the Final Plan Utility sheet C2.01

GAS AND ELECTRIC:
It is unclear whether an existing gas line is near the property however electric does exist. Pursuant to the Diamond K Subdivision work, Atmos appears to be the closest gas line approximately 1,300 feet away.

An electric distribution system is proposed to be buried along all the proposed RK Drive to serve each proposed Lot.

WILL SERVICE LETTERS:
The Owner has contacted South East Weld County Fire Rescue (SEWCFR) requesting service. A Fire Truck access analysis has been performed using SEWCR Fire Truck template.

Water will be provided by the Town of Keenesburg system. Sewage will be private On Site Wastewater System (Septic) in accordance with Weld County OWTS criteria. See also the Sketch Plan Utility sheet (5).

Electricity is provided by United Power. Gas may be available – it is unclear if it will be provided by Xcel Energy or Atmos Energy. WEC has requested Will Serve Letters from both. See also the Sketch Plan Utility sheet (5).

SURVEYS:
The Site topography and boundary survey was provided by American West Land Surveyors in Brighton.

LSC TRANSPORTATION CONSULTANTS, INC.

1889 York Street
Denver, CO 80206
(303) 333-1105
FAX (303) 333-1107
E-mail: lsc@lscdenver.com

August 30, 2019

Mr. Ben Mickey
Western Engineering Consultants, Inc.
127 S. Denver Avenue
Fort Collins, CO 80621

Re: Market Street Business Park
Keenesburg, CO
LSC #190900

Dear Mr. Mickey:

In response to your request, LSC Transportation Consultants, Inc. has prepared this traffic impact analysis for the proposed Market Street Business Park development. As shown on Figure 1, the site is located between I-76 and Weld County Road (CR) 18 and west of Market Street in Keenesburg, Colorado.

DRAFT

REPORT CONTENTS

The report contains the following: the existing roadway and traffic conditions in the vicinity of the site including the lane geometries, traffic controls, posted speed limits, etc.; the existing weekday peak-hour traffic volumes; the existing daily traffic volumes in the area; the typical weekday site-generated traffic volume projections for the site; the assignment of the projected traffic volumes to the area roadways; the projected short-term and long-term background and resulting total traffic volumes on the area roadways; the site's projected traffic impacts; and any recommended roadway improvements to mitigate the site's traffic impacts.

LAND USE AND ACCESS

The site is proposed to include a 60-room hotel, three car wash stalls, a 1,600 square-foot retail store, a 1,600 square-foot sit-down restaurant, a gas station with ten fueling positions, and two 3,000 square-foot fast-food restaurants. Figure 2 shows the conceptual site plan.

ROADWAY AND TRAFFIC CONDITIONS

Area Roadways

The major roadways in the site's vicinity are shown on Figure 1 and are described below.

- **Market Street** is a north-south, two-lane collector roadway east of the site. The intersections with CR 18 and the I-76 Ramps are stop-sign controlled. The posted speed limit in the vicinity of the site is 30 mph.

- **County Road (CR) 18** is an east-west, two-lane collector roadway north of the site. The intersection with Market Street is stop-sign controlled. The posted speed limit in the vicinity of the site is 30 mph.

Existing Traffic Conditions

Figure 3 shows the existing lane geometries, traffic controls, posted speed limits, and traffic volumes in the site's vicinity on a typical weekday. The weekday peak-hour traffic and daily traffic volumes are from the attached traffic counts conducted by Counter Measures in August, 2019.

2022 and 2040 Background Traffic

Figure 4 shows the estimated 2022 background traffic, lane geometries, and traffic control based on an annual growth rate of one percent. Figure 5 shows the estimated 2040 background traffic based on an annual growth rate of one percent plus additional development east of the site and along N. 1st Street.

Existing, 2022 Background, and 2040 Background Levels of Service

Level of service (LOS) is a quantitative measure of the level of congestion or delay at an intersection. Level of service is indicated on a scale from "A" to "F." LOS A is indicative of little congestion or delay and LOS F is indicative of a high level of congestion or delay. Attached are specific level of service definitions for unsignalized intersections.

The intersections in the study area were analyzed to determine the existing, 2022 background, and 2040 background levels of service using Synchro. Table 1 shows the level of service analysis results. The level of service reports are attached.

- **Market Street/CR 18:** All movements at this unsignalized intersection currently operate at LOS "A" during both morning and afternoon peak-hours and are expected to do so through 2040.

- **Market Street/N. 1st Street:** All movements at this unsignalized intersection currently operate at LOS "B" or better during both morning and afternoon peak-hours and are expected to do so through 2040.

TRIP GENERATION

Table 2 shows the estimated average weekday, morning peak-hour, and afternoon peak-hour trip generation for the proposed site based on the rates from *Trip Generation, 10th Edition, 2017* by the Institute of Transportation Engineers (ITE).

The site is projected to generate about 3,282 primary vehicle-trips on the average weekday, with about half entering and half exiting during a 24-hour period. During the morning peak-hour, which generally occurs for one hour between 6:30 and 8:30 a.m., about 211 vehicles would enter and about 185 vehicles would exit the site. During the afternoon peak-hour, which generally occurs for one hour between 4:00 and 6:00 p.m., about 232 vehicles would enter and about 222 vehicles would exit.

DRAFT

TRIP DISTRIBUTION

Figure 6 shows the estimated directional distribution of the site-generated traffic volumes on the area roadways. The estimates were based on the location of the site with respect to the regional population, employment, and activity centers; the site's proposed land use; and the traffic counts.

TRIP ASSIGNMENT

Figure 7a shows the estimated primary site-generated traffic volumes based on the directional distribution percentages (from Figure 6) and the primary trip generation estimate (from Table 2).

Figure 7b shows the estimated passby traffic volumes based on the passby trip generation estimate (from Table 2) assuming 80 percent of passby trips occur from I-76 and 20 percent from Market Street.

Figure 7c shows the estimated total site-generated traffic volumes which is the sum of the volumes in Figures 7a and 7b.

2022 and 2040 TOTAL TRAFFIC

Figure 8 shows the 2022 total traffic which is the sum of the 2022 background traffic volumes (from Figure 4) and the site-generated traffic volumes (from Figure 7c). Figure 8 also shows the recommended 2022 lane geometry and traffic control.

Figure 9 shows the 2040 total traffic which is the sum of 2040 background traffic volumes (from Figure 5) and the site-generated traffic volumes (from Figure 7c). Figure 9 also shows the recommended 2040 lane geometry and traffic control.

PROJECTED LEVELS OF SERVICE

The intersections in the study area were analyzed to determine the 2022 and 2040 total levels of service. Table 1 shows the level of service analysis results. The level of service reports are attached.

- **Market Street/Site Access:** All movements at this unsignalized intersection are expected to operate at LOS "C" or better during both morning and afternoon peak-hours through 2040.

- **Market Street/CR 18:** All movements at this unsignalized intersection are expected to - operate at LOS "A" during both morning and afternoon peak-hours through 2040.

- **Market Street/N. 1st Street:** All movements at this unsignalized intersection are expected to operate at LOS "C" or better during both morning and afternoon peak-hours through 2040.

DRAFT

CONCLUSIONS AND RECOMMENDATIONS

Trip Generation

1. The site is projected to generate about 3,282 primary ehicle-trips on the average weekday, with about half entering and half exiting during a 24-hour period. During the morning peak-hour, about 211 vehicles would enter and about 185 vehicles would exit the site. During the afternoon peak-hour, about 232 vehicles would enter and about 222 vehicles would exit.

Projected Levels of Service

2. All movements at all of the unsignalized intersections analyzed are expected to operate at LOS "C" or better through 2040.

Conclusions

3. The impact of the proposed Market Street Business Park development can be accommodated by the existing roadway network with the following recommended improvements.

Recommendations

4. A northbound left-turn lane is recommended on Market Street approaching the site. The posted speed limit is 30 mph so an appropriate length would be about 75 feet to accommodate vehicle storage for one tractor trailer or three passenger vehicles. An appropriate transition taper is 50 feet and an appropriate redirect taper is 15:1. A similar length southbound left-turn lane will likely be needed if the property to the east develops.

* * * * *

We trust our findings will assist you in gaining approval of the proposed Market Street Business Park development. Please contact me if you have any questions or need further assistance.

Sincerely,

LSC TRANSPORTATION CONSULTANTS, INC.

By_____
Christopher S. McGranahan, PE, PTOE
Principal

CSM/wc

Enclosures: Tables 1 and 2
Figures 1 - 9
Traffic Count Reports
Level of Service Definitions
Level of Service Reports

DRAFT

Table 1
Intersection Levels of Service Analysis
Market Street Business Park
Keenesburg, CO
LSC #190900; August, 2019

		Existing Traffic		2022 Background		2022 Total		2040 Background		2040 Total	
Intersection Location	Traffic Control	Level of Service AM	Level of Service PM	Level of Service AM	Level of Service PM	Level of Service AM	Level of Service PM	Level of Service AM	Level of Service PM	Level of Service AM	Level of Service PM
Market Street/Site Access	TWSC										
NB Approach		--	--	--	--	--	--	A	A	--	--
NB Left		--	--	--	--	A	A	--	--	A	A
EB Approach		--	--	--	--	B	B	A	A	B	B
WB Approach		--	--	--	--	--	--	A	B	C	C
SB Approach		--	--	--	--	--	--	A	A	A	A
Critical Movement Delay (sec /veh)		--	--	--	--	10.4	12.0	9.9	10.4	18.2	23.7
Market Street/CR 18	AWSC										
NB Approach		A	A	A	A	A	A	A	A	A	A
EB Approach		A	A	A	A	A	A	A	A	A	A
WB Approach		A	A	A	A	A	A	A	A	A	A
Entire Intersection Delay (sec /veh)		7.3	7.6	7.4	7.7	7.4	7.7	7.5	7.8	7.6	7.9
Entire Intersection LOS		A	A	A	A	A	A	A	A	A	A
Market Street/N. 1st Street	TWSC										
NB Approach		A	A	A	A	A	A	A	A	A	A
EB Approach		B	B	B	B	B	C	B	B	B	C
WB Approach		A	B	A	B	B	B	B	B	B	B
SB Approach		A	A	A	A	A	A	A	A	A	A
Critical Movement Delay (sec /veh)		10.6	13.1	10.3	13.3	12.1	17.0	11.2	14.9	13.2	19.6

DRAFT

Table 2
ESTIMATED TRAFFIC GENERATION
Market Street Business Park
Keenesburg, CO
LSC #190900; August, 2019

		Trip Generation Rates [1]					Vehicle-Trips Generated				
		Average	AM Peak-Hour		PM Peak-Hour		Average	AM Peak-Hour		PM Peak-Hour	
Trip Generating Category	Quantity	Weekday	In	Out	In	Out	Weekday	In	Out	In	Out
CURRENTLY PROPOSED LAND USE											
Hotel [2]	60 Rooms	8.36	0.277	0.193	0.306	0.294	502	17	12	18	18
Car Wash - Manual [3]	2 WS [4]	108.00	2.715	2.825	2.825	2.715	216	5	6	6	5
Car Wash - Automatic [5]	1 WS	387.50	19.375	19.375	38.750	38.750	388	19	19	39	39
Store [6]	1.6 KSF [7]	37.75	0.583	0.357	1.829	1.981	60	1	1	3	3
Restaurant [8]	1.6 KSF	112.18	5.467	4.473	6.057	3.713	179	9	7	10	6
Gas Station [9]	10 FP [10]	205.36	6.360	6.110	7.135	6.855	2,054	64	61	71	69
Fast Food [11]	3 KSF	346.23	15.060	10.040	14.170	14.170	1,039	45	30	43	43
Fast Food [12]	3 KSF	470.95	20.497	19.693	16.988	15.682	1,177	51	49	42	39
						Subtotal =	5,615	211	185	232	222
Store [6]						34%	20	0	0	1	1
Restaurant [8]						43%	77	3	3	3	3
Gas Station [9]						56%	1,150	35	35	39	39
Fast Food [11]						49%	509	18	18	21	21
Fast Food [12]						49%	577	24	24	20	20
						Passby Trips [13] =	2,333	80	80	84	84
						Primary Trips =	**3,282**	**131**	**105**	**148**	**138**

Notes:
(1) Source: *Trip Generation*, Institute of Transportation Engineers, 10th Edition, 2017.
(2) ITE Land Use No. 310 - Hotel
(3) ITE Land Use No. 947 - Self-Service Car Wash; no AM Peak Hour rates, so the reverse of PM Peak Hour was used
(4) WS = wash stalls
(5) ITE Land Use No. 948 - Automated Car Wash; no AM Peak Hour rates, so the reverse of PM Peak Hour was used. No average weekday, so 5x PM Peak rate was used
(6) ITE Land Use No. 820 - Shopping Center
(7) KSF = 1,000 square feet
(8) ITE Land Use No. 932 - High-Turnover (Sit-Down) Restaurant
(9) ITE Land Use No. 945 - Gasoline/Service Station with Convenience Market
(10) FP = vehicle fueling positions
(11) ITE Land Use No. 933 - Fast-Food Restaurant without Drive-Through Window
(12) ITE Land Use No. 934 - Fast-Food Restaurant with Drive-Through Window
(13) Pass-by rate were assumed based on the *Trip Generation Handbook*, 3rd Edition, as follows: Store = 34%; Restaurant = 43%; Gas Station = 56%; Fast-Food Restaurants = 49%.

DRAFT

Figure 1

Vicinity Map

Market Street Business Park (LSC #190900)

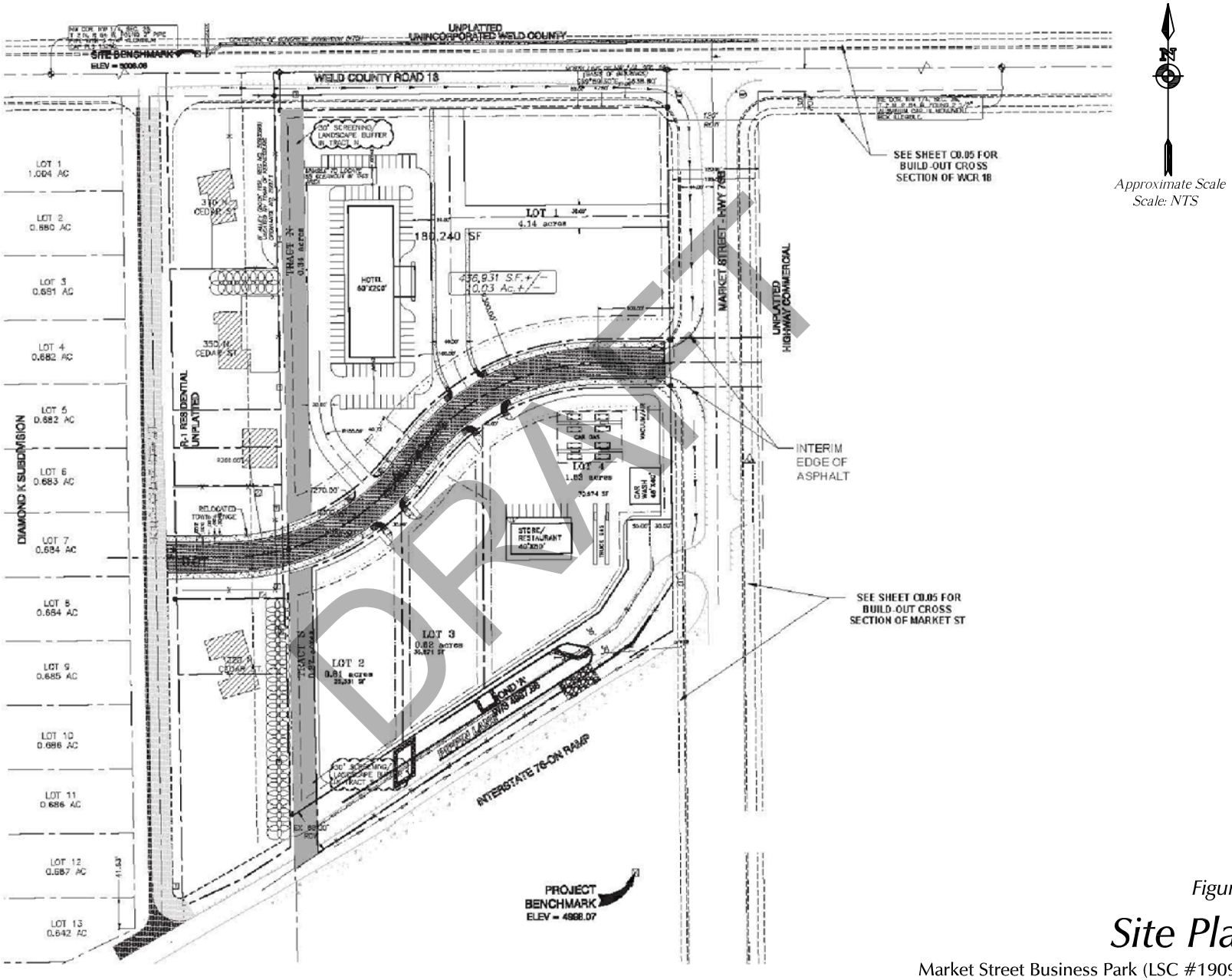

Approximate Scale
Scale: NTS

Figure 2

Site Plan

Market Street Business Park (LSC #190900)

TRANSPORTATION CONSULTANTS, INC.

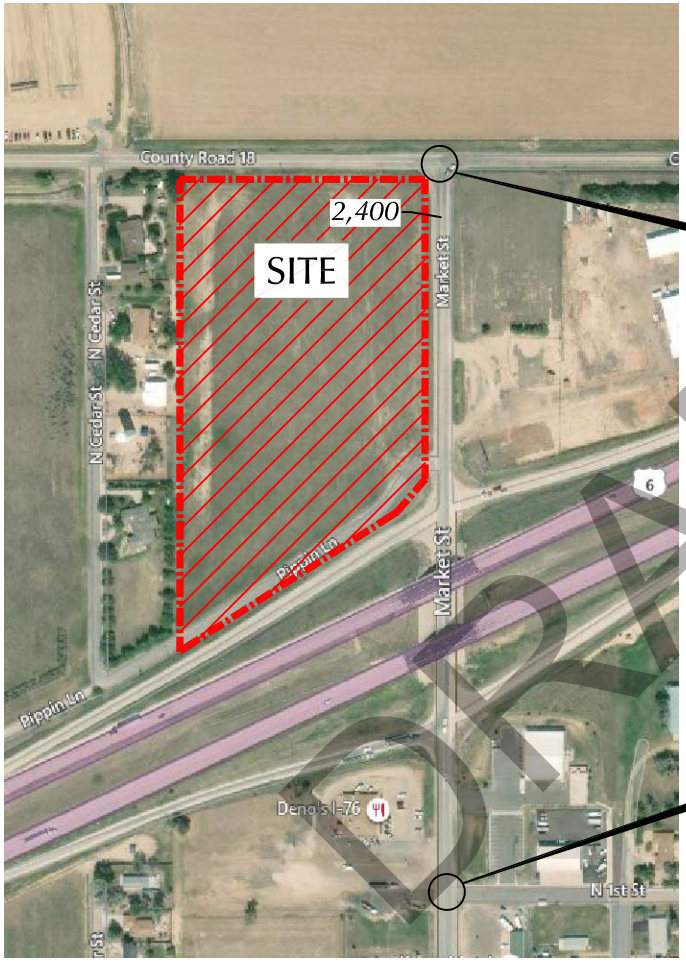

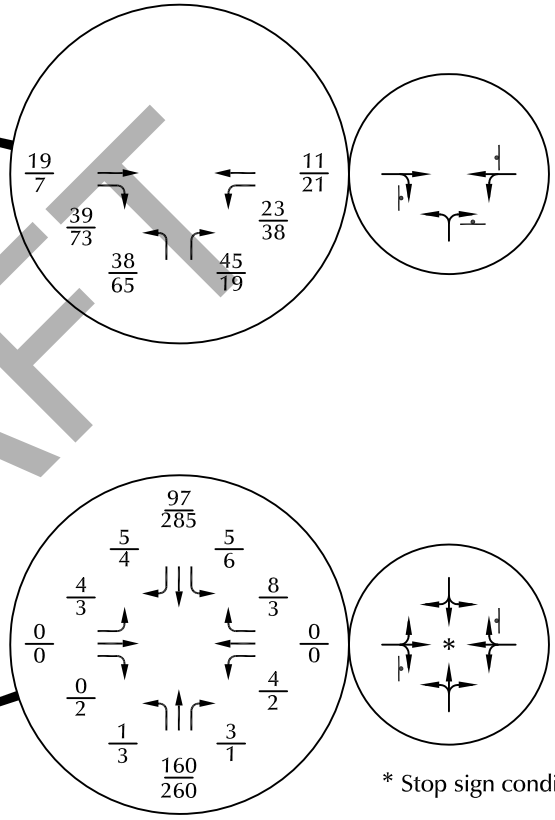

* Stop sign condition is implied.

Approximate Scale
Scale: 1"=400'

DRAFT

LEGEND:

= Stop Sign

$\frac{26}{35}$ = $\frac{\text{AM Peak Hour Traffic}}{\text{PM Peak Hour Traffic}}$

2,500 = Average Daily Traffic

Figure 3

Existing Traffic, Lane Geometry and Traffic Control

Market Street Business Park (LSC #190900)

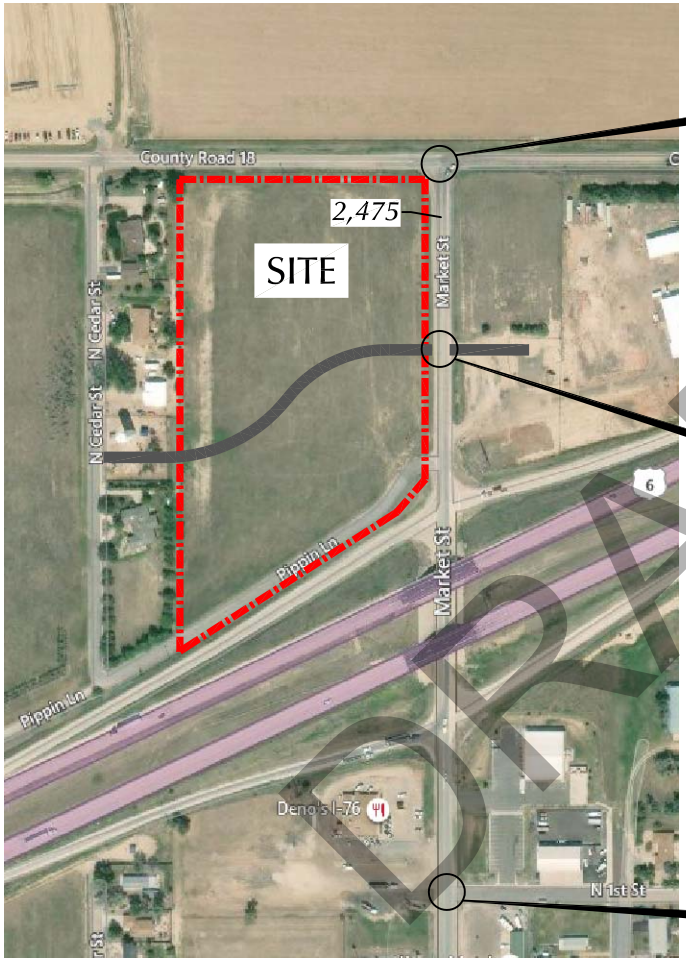

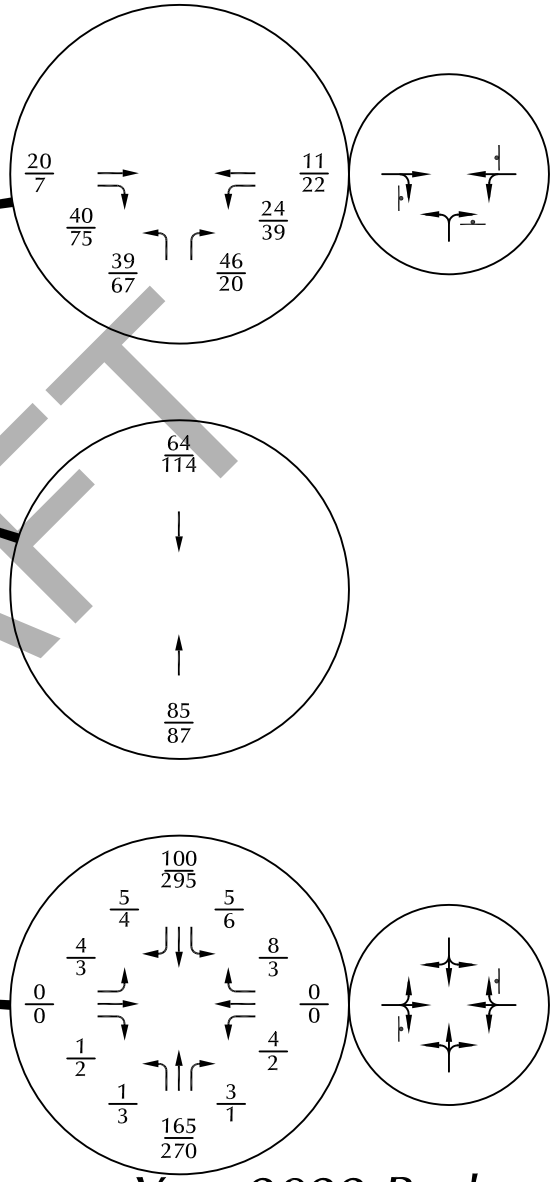

Approximate Scale
Scale: 1"=400'

Note: Assumes annual growth rate of one percent.

LEGEND:

= Stop Sign

$\frac{26}{35}$ = $\frac{\text{AM Peak Hour Traffic}}{\text{PM Peak Hour Traffic}}$

2,500 = Average Daily Traffic

Figure 4

Year 2022 Background Traffic, Lane Geometry and Traffic Control

Market Street Business Park (LSC #190900)

DRAFT

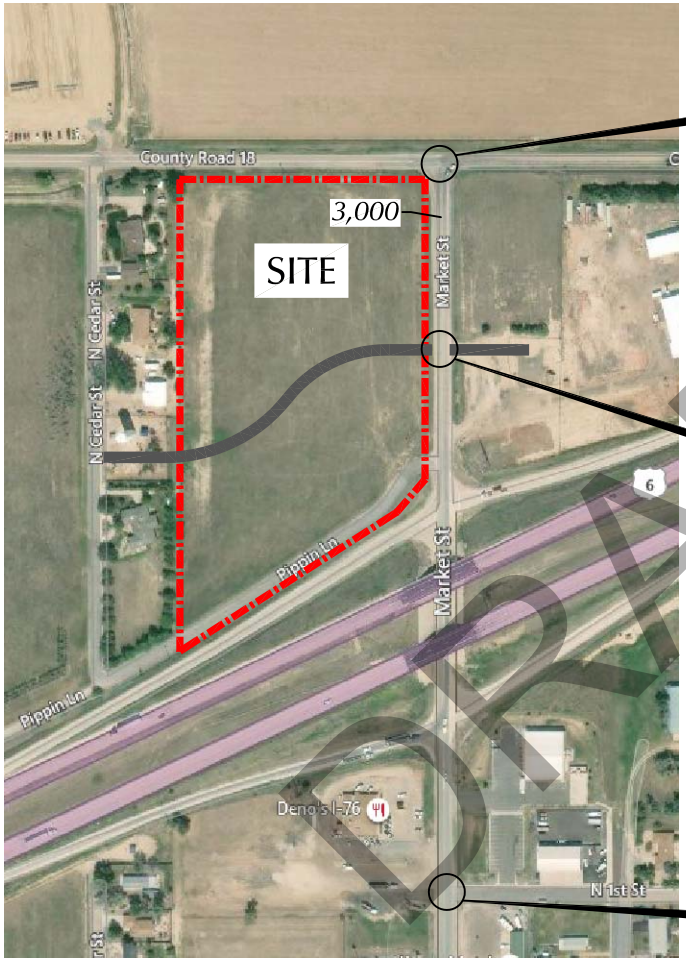

Note: Assumes annual growth rate of one percent plus additional development east of the site and along N. 1st Street.

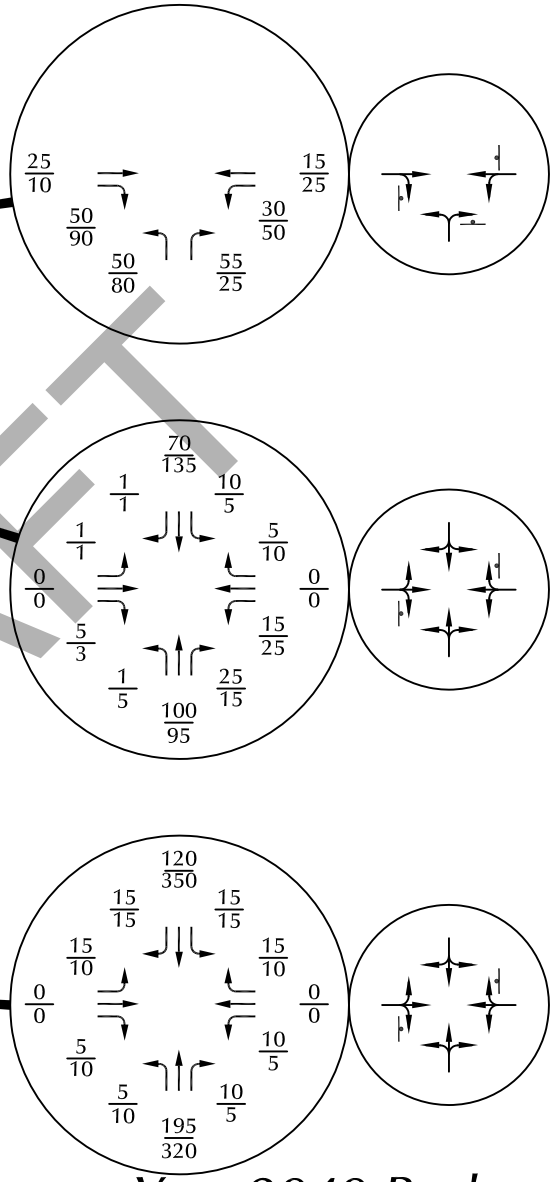

Approximate Scale
Scale: 1"=400'

LEGEND:

= Stop Sign

$\frac{26}{35}$ = $\frac{\text{AM Peak Hour Traffic}}{\text{PM Peak Hour Traffic}}$

2,500 = Average Daily Traffic

Figure 5

Year 2040 Background Traffic, Lane Geometry and Traffic Control

Market Street Business Park (LSC #190900)

DRAFT

LSC TRANSPORTATION CONSULTANTS, INC.

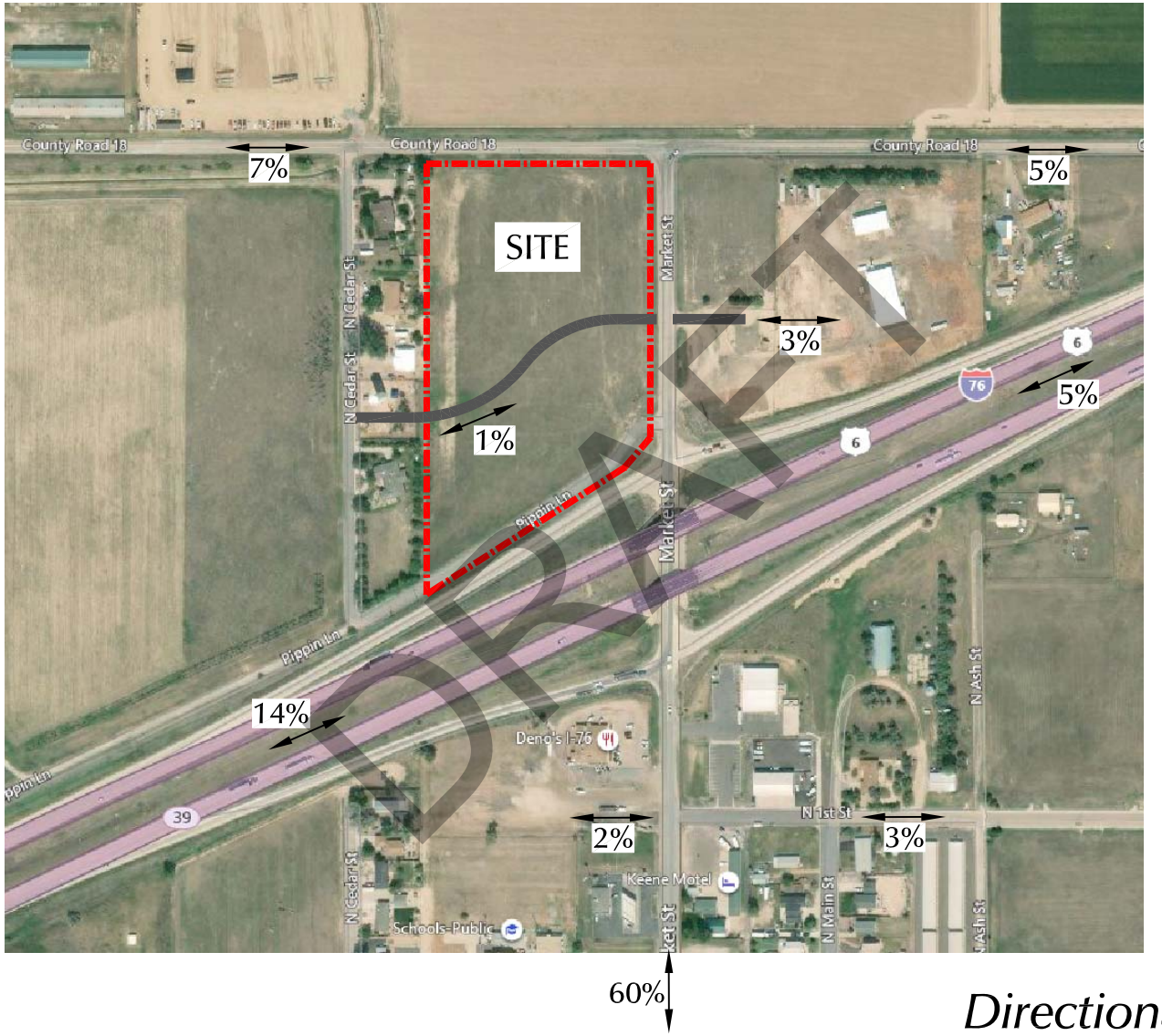

DRAFT

Approximate Scale
Scale: 1"=400'

LEGEND:

65% = Percent Directional Distribution

Figure 6

Directional Distribution of Site-Generated Traffic

Market Street Business Park (LSC #190900)

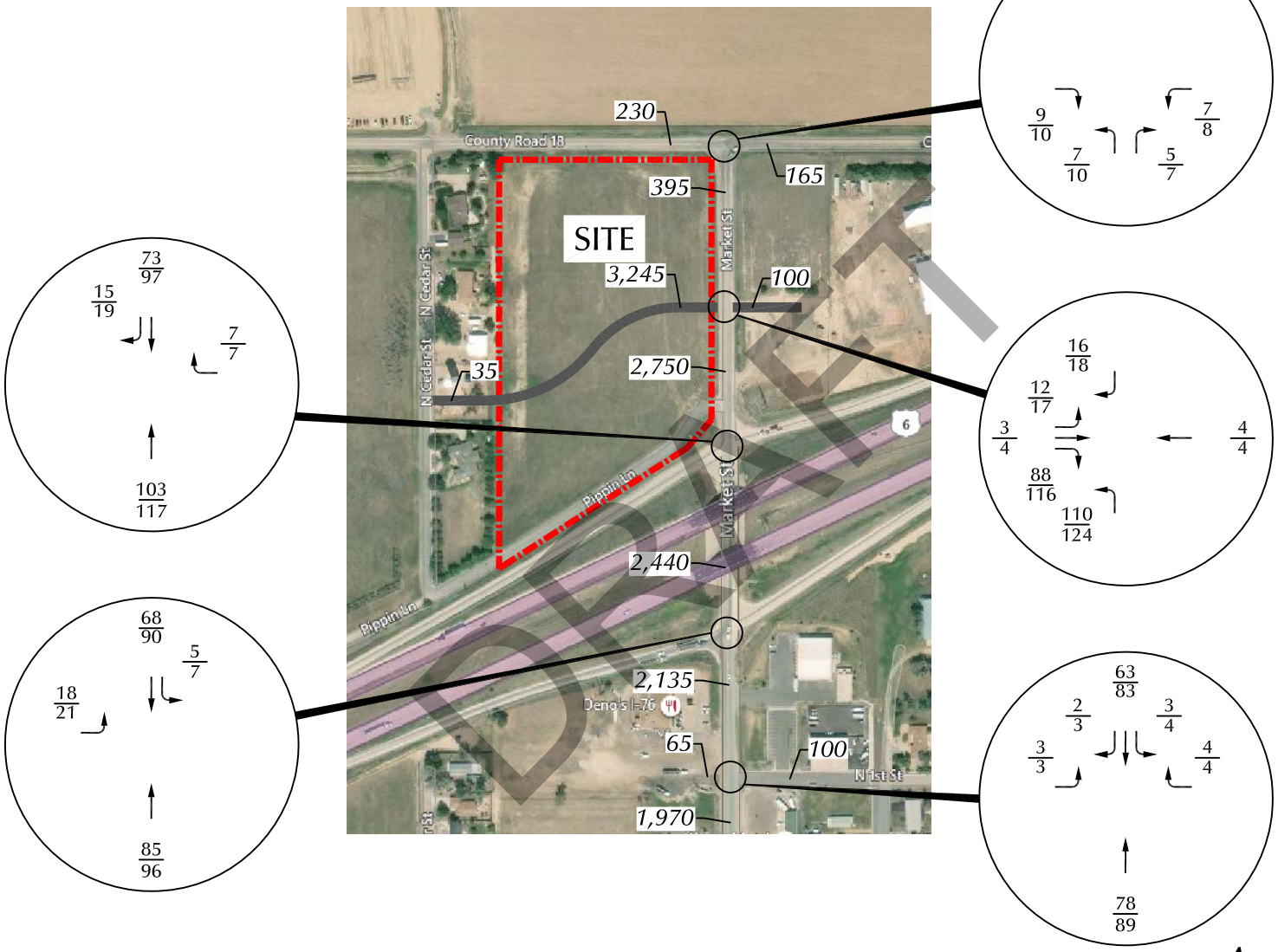

Approximate Scale
Scale: 1"=400'

DRAFT

LEGEND:

$\frac{26}{35}$ = $\frac{\text{AM Peak Hour Traffic}}{\text{PM Peak Hour Traffic}}$

2,500 = Average Daily Traffic

Figure 7a

Assignment of Primary Site-Generated Traffic

Market Street Business Park (LSC #190900)

LSC TRANSPORTATION CONSULTANTS, INC.

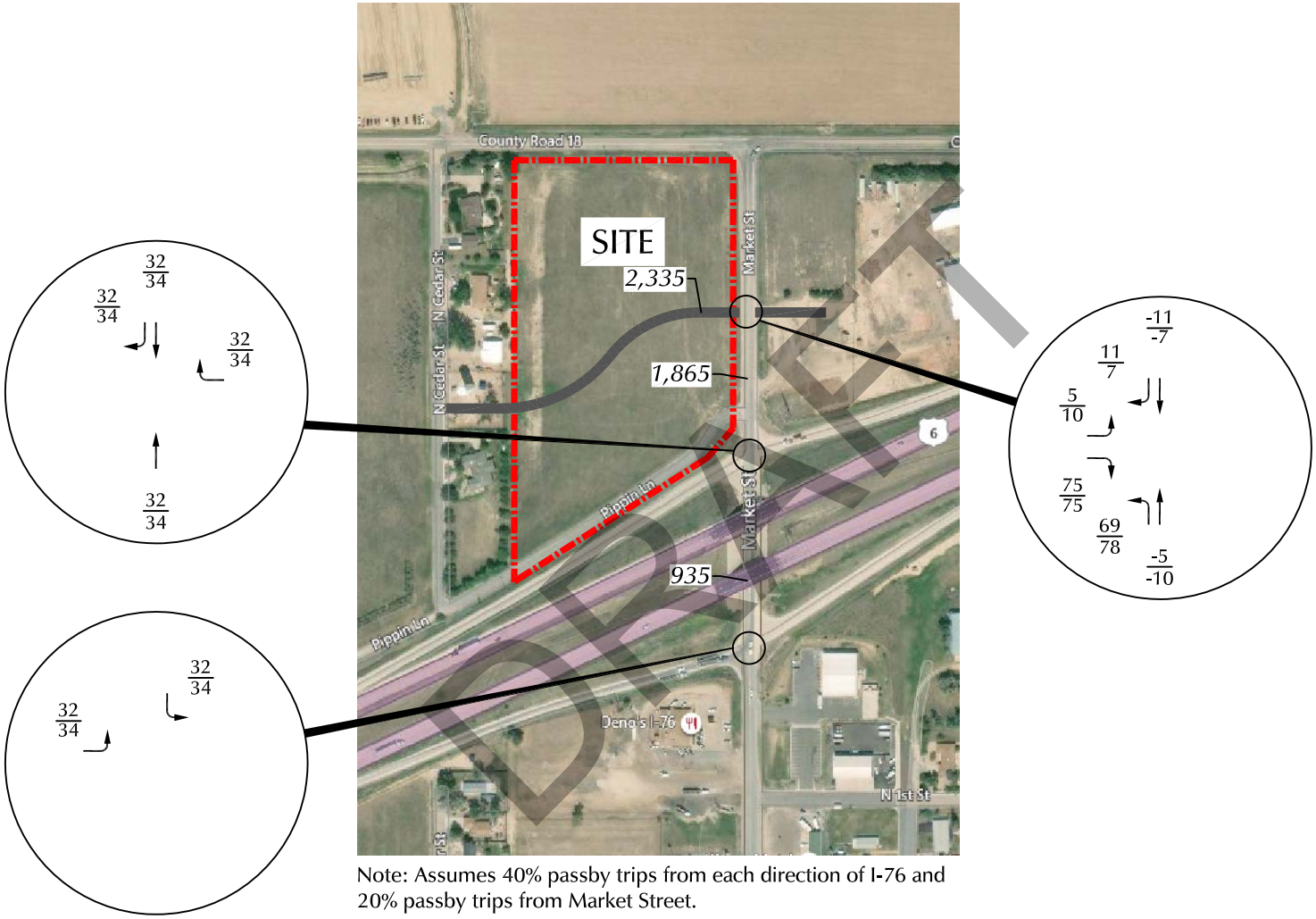

Note: Assumes 40% passby trips from each direction of I-76 and 20% passby trips from Market Street.

LEGEND:

$\frac{26}{35}$ = $\frac{\text{AM Peak Hour Traffic}}{\text{PM Peak Hour Traffic}}$

2,500 = Average Daily Traffic

Figure 7b

Assignment of Passby Site-Generated Traffic

Market Street Business Park (LSC #190900)

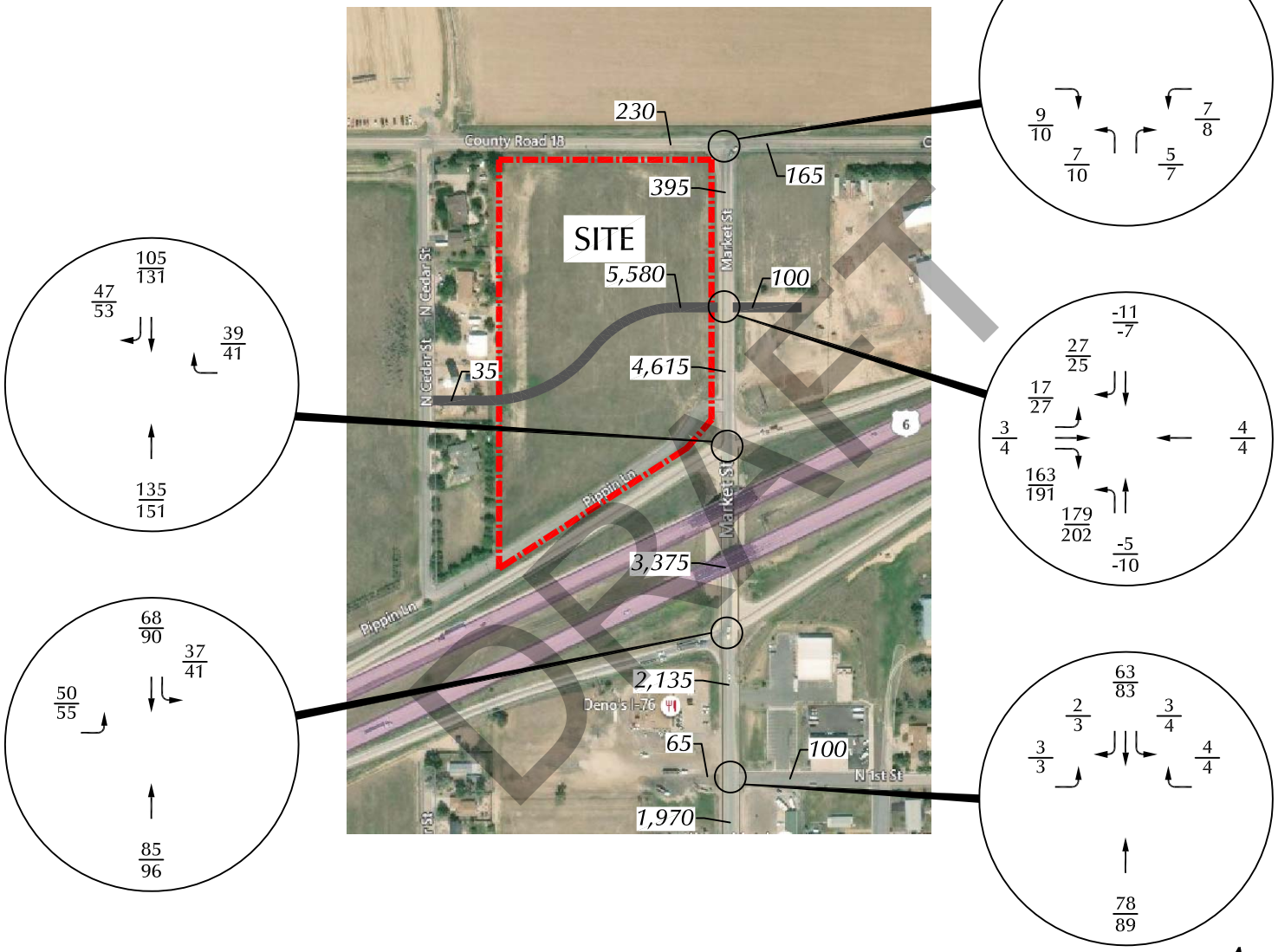

Approximate Scale
Scale: 1"=400'

LEGEND:

$\frac{26}{35}$ = $\frac{\text{AM Peak Hour Traffic}}{\text{PM Peak Hour Traffic}}$

2,500 = Average Daily Traffic

Figure 7c

Assignment of Total Site-Generated Traffic

Market Street Business Park (LSC #190900)

DRAFT

LSC TRANSPORTATION CONSULTANTS, INC.

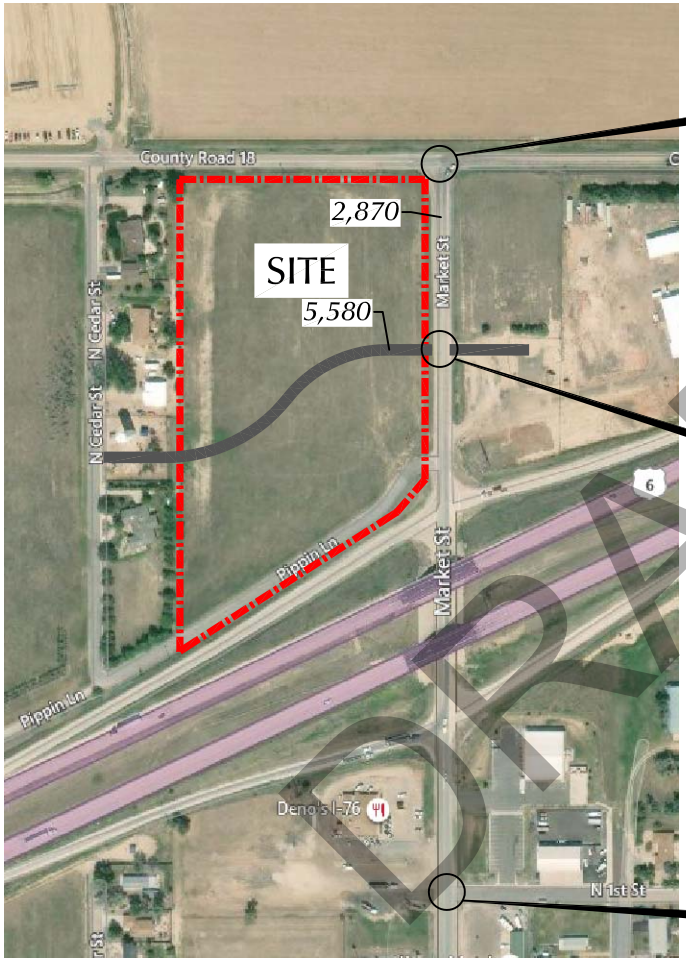

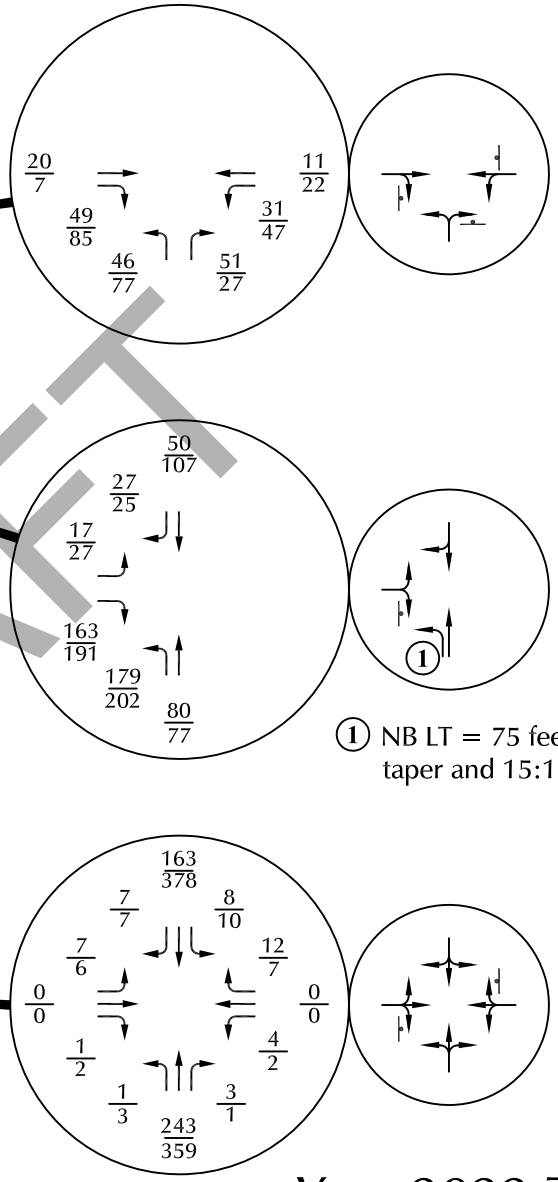

Approximate Scale
Scale: 1"=400'

1 NB LT = 75 feet + 50-foot transition taper and 15:1 redirect taper.

DRAFT

LEGEND:

= Stop Sign

$\frac{26}{35}$ = $\frac{\text{AM Peak Hour Traffic}}{\text{PM Peak Hour Traffic}}$

2,500 = Average Daily Traffic

Figure 8

Year 2022 Total Traffic, Lane Geometry and Traffic Control

Market Street Business Park (LSC #190900)

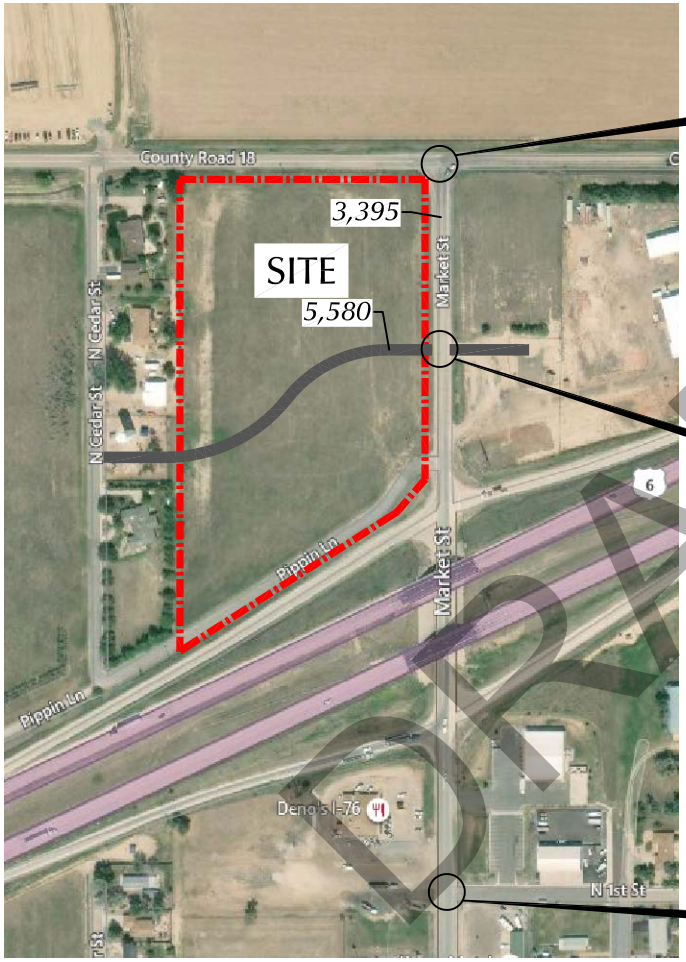

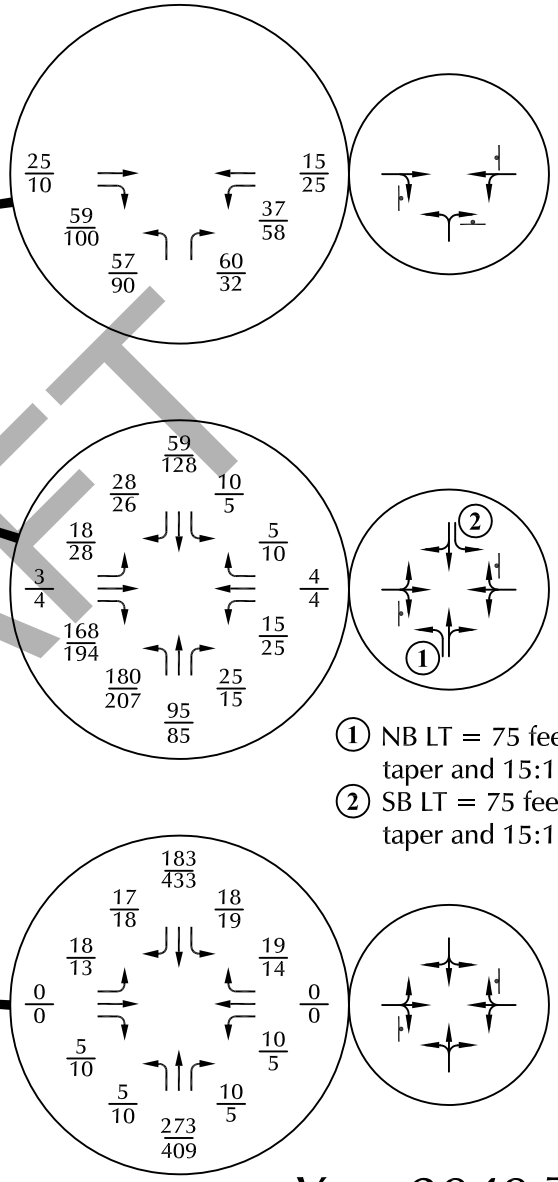

Approximate Scale
Scale: 1"=400'

① NB LT = 75 feet + 50-foot transition taper and 15:1 redirect taper.
② SB LT = 75 feet + 50-foot transition taper and 15:1 redirect taper.

LEGEND:

= Stop Sign

$\frac{26}{35}$ = $\frac{\text{AM Peak Hour Traffic}}{\text{PM Peak Hour Traffic}}$

2,500 = Average Daily Traffic

Figure 9

Year 2040 Total Traffic, Lane Geometry and Traffic Control

Market Street Business Park (LSC #190900)

DRAFT

COUNTER MEASURES INC.
1889 YORK STREET
DENVER.COLORADO
303-333-7409

N/S STREET: MARKET ST.
E/W STREET: 1ST ST
CITY: KEENESBURG
COUNTY: WELD

File Name : MARKET1ST
Site Code : 00000015
Start Date : 8/6/2019
Page No : 1

Groups Printed- VEHICLES

	MARKET ST Southbound				1ST ST Westbound				MARKET ST Northbound				DENO'S SITE Eastbound				
Start Time	Left	Thru	Right	Peds	Left	Thru	Right	Peds	Left	Thru	Right	Peds	Left	Thru	Right	Peds	Int. Total
Factor	1.0	1.0	1.0	1.0	1.0	1.0	1.0	1.0	1.0	1.0	1.0	1.0	1.0	1.0	1.0	1.0	
06:30 AM	2	43	0	0	0	0	0	0	1	59	0	0	4	0	1	0	110
06:45 AM	1	30	2	0	0	0	1	0	1	35	0	0	0	0	0	0	70
Total	3	73	2	0	0	0	1	0	2	94	0	0	4	0	1	0	180
07:00 AM	1	11	1	0	0	0	1	0	0	21	0	0	2	0	0	0	37
07:15 AM	2	12	1	0	0	0	0	0	0	36	0	0	1	0	0	0	52
07:30 AM	0	15	1	0	1	0	0	0	0	43	1	0	3	0	0	0	64
07:45 AM	3	28	1	0	1	0	4	0	0	36	1	0	0	0	0	0	74
Total	6	66	4	0	2	0	5	0	0	136	2	0	6	0	0	0	227
08:00 AM	0	29	1	0	1	0	2	0	0	42	0	1	1	0	0	0	77
08:15 AM	2	25	2	0	1	0	2	0	1	39	1	0	0	0	0	0	73
Total	2	54	3	0	2	0	4	0	1	81	1	1	1	0	0	0	150
04:00 PM	1	49	1	0	2	0	3	0	0	53	0	0	0	0	0	0	109
04:15 PM	2	58	1	0	0	0	1	0	0	48	1	2	0	0	0	0	113
04:30 PM	0	42	1	0	2	0	2	0	0	58	1	0	1	0	0	0	107
04:45 PM	0	68	2	0	0	0	0	0	0	51	0	0	0	0	0	0	121
Total	3	217	5	0	4	0	6	0	0	210	2	2	1	0	0	0	450
05:00 PM	1	72	0	0	0	0	1	0	0	94	0	0	0	0	1	0	169
05:15 PM	3	75	2	0	1	0	1	1	1	76	1	0	0	0	0	0	161
05:30 PM	2	75	0	0	0	0	0	0	1	41	0	0	2	0	0	0	121
05:45 PM	0	63	2	0	1	0	1	0	1	49	0	4	1	0	1	0	123
Total	6	285	4	0	2	0	3	1	3	260	1	4	3	0	2	0	574
Grand Total	20	695	18	0	10	0	19	1	6	781	6	7	15	0	3	0	1581
Apprch %	2.7	94.8	2.5	0.0	33.3	0.0	63.3	3.3	0.8	97.6	0.8	0.9	83.3	0.0	16.7	0.0	
Total %	1.3	44.0	1.1	0.0	0.6	0.0	1.2	0.1	0.4	49.4	0.4	0.4	0.9	0.0	0.2	0.0	

DRAFT

COUNTER MEASURES INC.
1889 YORK STREET
DENVER.COLORADO
303-333-7409

N/S STREET: MARKET ST.
E/W STREET: 1ST ST
CITY: KEENESBURG
COUNTY: WELD

File Name : MARKET1ST
Site Code : 00000015
Start Date : 8/6/2019
Page No : 2

	MARKET ST Southbound					1ST ST Westbound					MARKET ST Northbound					DENO'S SITE Eastbound					
Start Time	Left	Thru	Right	Peds	App. Total	Left	Thru	Right	Peds	App. Total	Left	Thru	Right	Peds	App. Total	Left	Thru	Right	Peds	App. Total	Int. Total
Peak Hour From 06:30 AM to 08:30 AM - Peak 1 of 1																					
Intersection	07:30 AM																				
Volume	5	97	5	0	107	4	0	8	0	12	1	160	3	1	165	4	0	0	0	4	288
Percent	4.7	90.7	4.7	0.0		33.3	0.0	66.7	0.0		0.6	97.0	1.8	0.6		100.0	0.0	0.0	0.0		
08:00 Volume	0	29	1	0	30	1	0	2	0	3	0	42	0	1	43	1	0	0	0	1	77
Peak Factor																					0.935
High Int.	07:45 AM					07:45 AM					07:30 AM					07:30 AM					
Volume	3	28	1	0	32	1	0	4	0	5	0	43	1	0	44	3	0	0	0	3	
Peak Factor					0.836					0.600					0.938					0.333	

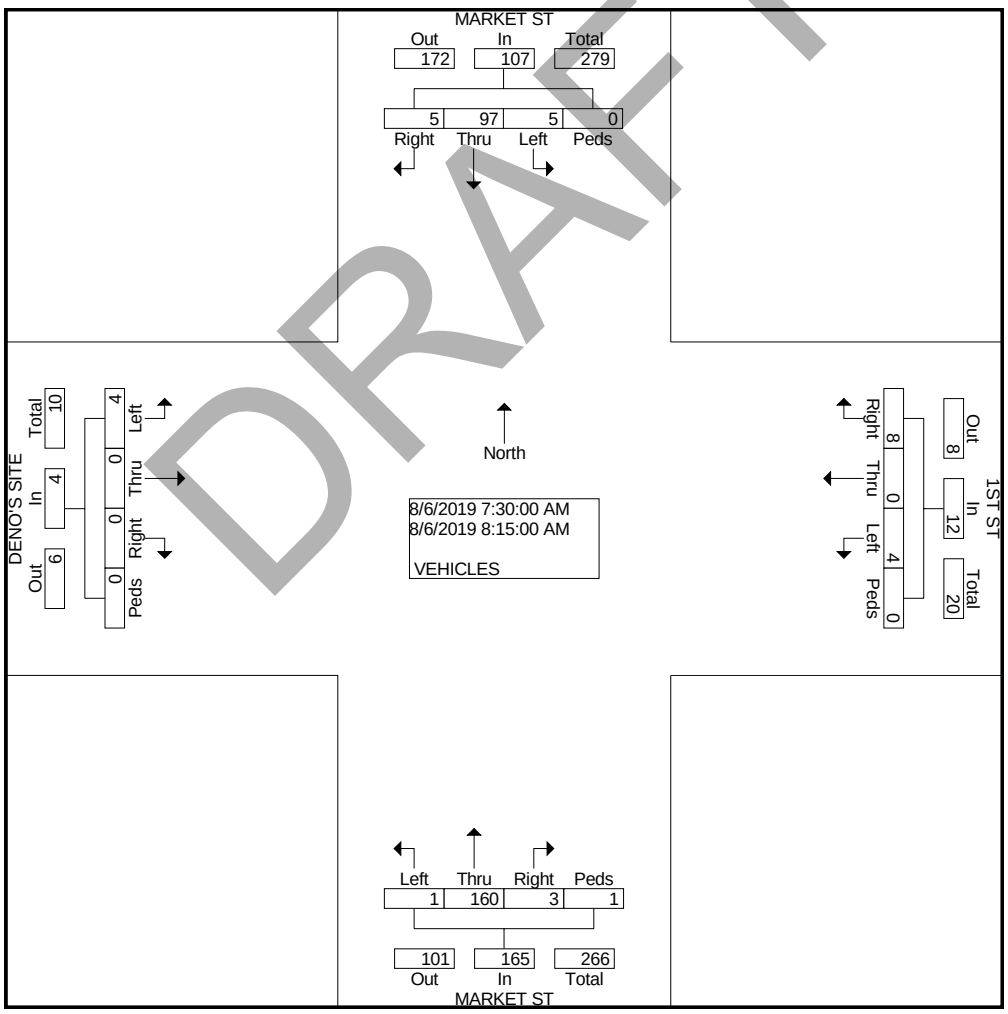

DRAFT

COUNTER MEASURES INC.
1889 YORK STREET
DENVER.COLORADO
303-333-7409

N/S STREET: MARKET ST.
E/W STREET: 1ST ST
CITY: KEENESBURG
COUNTY: WELD

File Name : MARKET1ST
Site Code : 00000015
Start Date : 8/6/2019
Page No : 2

	MARKET ST Southbound					1ST ST Westbound					MARKET ST Northbound					DENO'S SITE Eastbound					
Start Time	Left	Thru	Right	Peds	App. Total	Left	Thru	Right	Peds	App. Total	Left	Thru	Right	Peds	App. Total	Left	Thru	Right	Peds	App. Total	Int. Total
Peak Hour From 04:00 PM to 05:45 PM - Peak 1 of 1																					
Intersection	05:00 PM																				
Volume	6	285	4	0	295	2	0	3	1	6	3	260	1	4	268	3	0	2	0	5	574
Percent	2.0	96.6	1.4	0.0		33.3	0.0	50.0	16.7		1.1	97.0	0.4	1.5		60.0	0.0	40.0	0.0		
05:00 Volume	1	72	0	0	73	0	0	1	0	1	0	94	0	0	94	0	0	1	0	1	169
Peak Factor																					0.849
High Int.	05:15 PM					05:15 PM					05:00 PM					05:30 PM					
Volume	3	75	2	0	80	1	0	1	1	3	0	94	0	0	94	2	0	0	0	2	
Peak Factor					0.922					0.500					0.713					0.625	

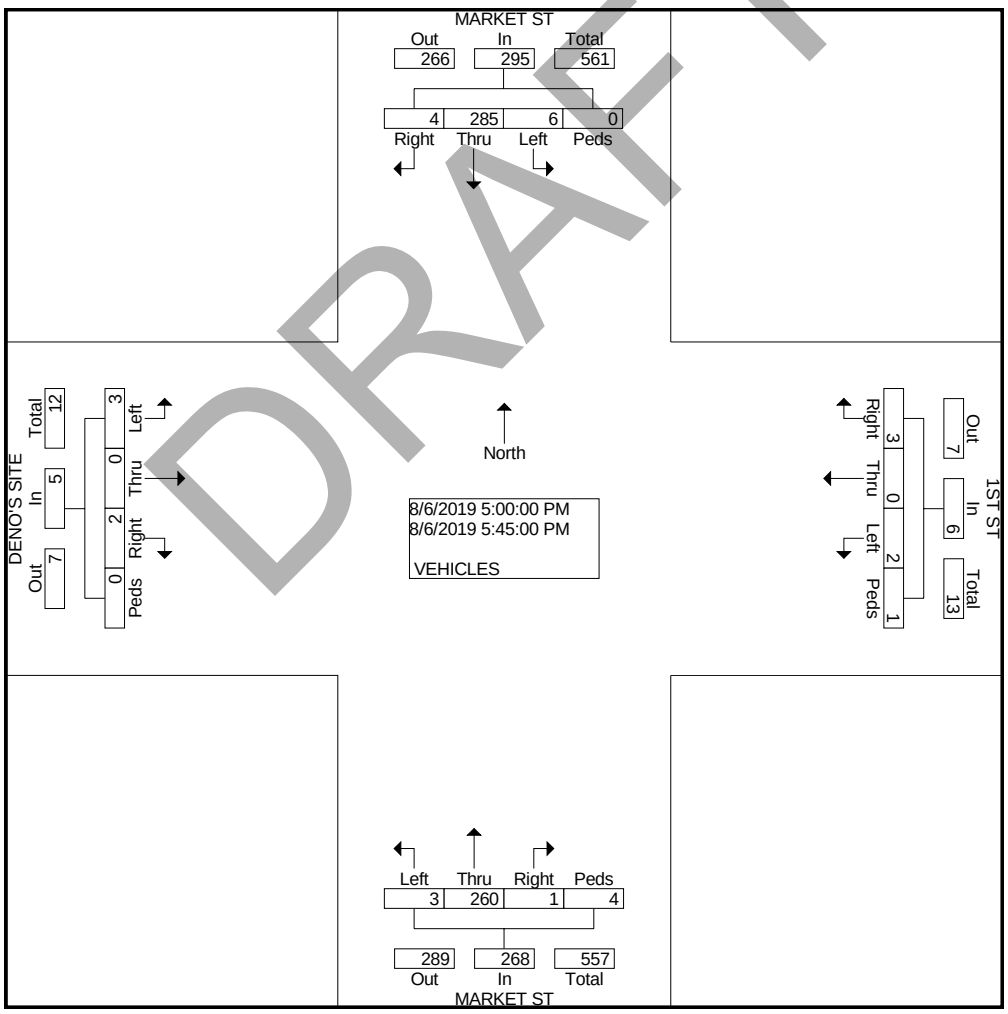

DRAFT

COUNTER MEASURES INC.
1889 YORK STREET
DENVER.COLORADO
303-333-7409

N/S STREET: MARKET STREET
E/W STREET: CR-18
CITY: KEENESBURG
COUNTY: WELD

File Name : MARKETCR-18
Site Code : 00000005
Start Date : 8/6/2019
Page No : 1

Groups Printed- VEHICLES

	Southbound				CR-18 Westbound				MARKET ST Northbound				CR-18 Eastbound				
Start Time	Left	Thru	Right	Peds	Left	Thru	Right	Peds	Left	Thru	Right	Peds	Left	Thru	Right	Peds	Int. Total
Factor	1.0	1.0	1.0	1.0	1.0	1.0	1.0	1.0	1.0	1.0	1.0	1.0	1.0	1.0	1.0	1.0	
06:30 AM	0	0	0	1	11	3	0	0	23	0	8	0	0	8	18	0	72
06:45 AM	0	0	0	0	4	3	0	0	22	0	15	0	0	7	15	0	66
Total	0	0	0	1	15	6	0	0	45	0	23	0	0	15	33	0	138
07:00 AM	0	0	0	0	6	2	0	0	14	0	7	0	0	4	14	0	47
07:15 AM	0	0	0	0	3	3	0	0	7	0	6	0	0	3	11	0	33
07:30 AM	0	0	0	0	5	5	0	0	13	0	19	0	0	8	5	0	55
07:45 AM	0	0	0	0	5	3	0	0	10	0	8	0	0	3	11	0	40
Total	0	0	0	0	19	13	0	0	44	0	40	0	0	18	41	0	175
08:00 AM	0	0	0	0	8	0	0	0	4	0	6	2	0	4	12	0	36
08:15 AM	0	0	0	0	5	3	0	0	11	0	12	0	0	4	11	0	46
Total	0	0	0	0	13	3	0	0	15	0	18	2	0	8	23	0	82
04:00 PM	0	0	0	1	15	1	0	0	7	0	8	0	0	2	5	0	39
04:15 PM	0	0	0	0	21	4	0	0	13	0	1	0	0	3	9	0	51
04:30 PM	0	0	0	0	7	5	0	0	15	0	4	0	0	3	11	0	45
04:45 PM	0	0	0	0	6	4	0	0	14	0	7	0	0	0	18	0	49
Total	0	0	0	1	49	14	0	0	49	0	20	0	0	8	43	0	184
05:00 PM	0	0	0	0	15	8	0	0	20	0	1	0	0	0	26	0	70
05:15 PM	0	0	0	0	11	1	0	0	21	0	8	0	0	0	16	0	57
05:30 PM	0	0	0	0	9	12	0	0	12	0	6	0	0	5	14	0	58
05:45 PM	0	0	0	0	3	0	0	0	12	0	4	0	0	2	17	0	38
Total	0	0	0	0	38	21	0	0	65	0	19	0	0	7	73	0	223
Grand Total	0	0	0	2	134	57	0	0	218	0	120	2	0	56	213	0	802
Apprch %	0.0	0.0	0.0	100.0	70.2	29.8	0.0	0.0	64.1	0.0	35.3	0.6	0.0	20.8	79.2	0.0	
Total %	0.0	0.0	0.0	0.2	16.7	7.1	0.0	0.0	27.2	0.0	15.0	0.2	0.0	7.0	26.6	0.0	

DRAFT

COUNTER MEASURES INC.
1889 YORK STREET
DENVER.COLORADO
303-333-7409

N/S STREET: MARKET STREET
E/W STREET: CR-18
CITY: KEENESBURG
COUNTY: WELD

File Name : MARKETCR-18
Site Code : 00000005
Start Date : 8/6/2019
Page No : 2

	Southbound					CR-18 Westbound					MARKET ST Northbound					CR-18 Eastbound					
Start Time	Left	Thru	Right	Peds	App. Total	Left	Thru	Right	Peds	App. Total	Left	Thru	Right	Peds	App. Total	Left	Thru	Right	Peds	App. Total	Int. Total
Peak Hour From 07:30 AM to 08:15 AM - Peak 1 of 1																					
Intersection	07:30 AM																				
Volume	0	0	0	0	0	23	11	0	0	34	38	0	45	2	85	0	19	39	0	58	177
Percent	0.0	0.0	0.0	0.0		67.6	32.4	0.0	0.0		44.7	0.0	52.9	2.4		0.0	32.8	67.2	0.0		
07:30 Volume	0	0	0	0	0	5	5	0	0	10	13	0	19	0	32	0	8	5	0	13	55
Peak Factor																					0.805
High Int.						07:30 AM					07:30 AM					08:00 AM					
Volume	0	0	0	0	0	5	5	0	0	10	13	0	19	0	32	0	4	12	0	16	
Peak Factor										0.850					0.664					0.906	

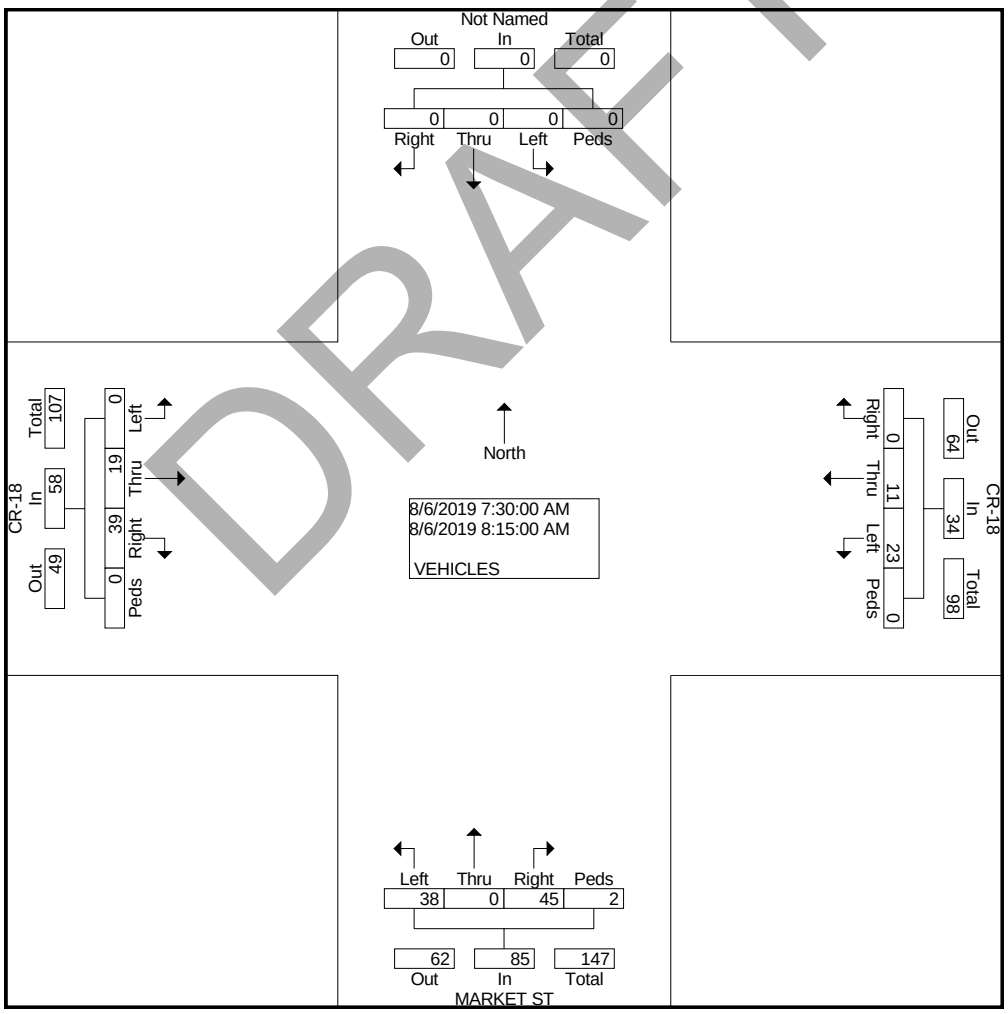

DRAFT

COUNTER MEASURES INC.
1889 YORK STREET
DENVER.COLORADO
303-333-7409

N/S STREET: MARKET STREET
E/W STREET: CR-18
CITY: KEENESBURG
COUNTY: WELD

File Name : MARKETCR-18
Site Code : 00000005
Start Date : 8/6/2019
Page No : 2

	Southbound					CR-18 Westbound					MARKET ST Northbound					CR-18 Eastbound					
Start Time	Left	Thru	Right	Peds	App. Total	Left	Thru	Right	Peds	App. Total	Left	Thru	Right	Peds	App. Total	Left	Thru	Right	Peds	App. Total	Int. Total
Peak Hour From 05:00 PM to 05:45 PM - Peak 1 of 1																					
Intersection	05:00 PM																				
Volume	0	0	0	0	0	38	21	0	0	59	65	0	19	0	84	0	7	73	0	80	223
Percent	0.0	0.0	0.0	0.0		64.4	35.6	0.0	0.0		77.4	0.0	22.6	0.0		0.0	8.8	91.3	0.0		
05:00 Volume	0	0	0	0	0	15	8	0	0	23	20	0	1	0	21	0	0	26	0	26	70
Peak Factor																					0.796
High Int.						05:00 PM					05:15 PM					05:00 PM					
Volume	0	0	0	0	0	15	8	0	0	23	21	0	8	0	29	0	0	26	0	26	
Peak Factor										0.641					0.724					0.769	

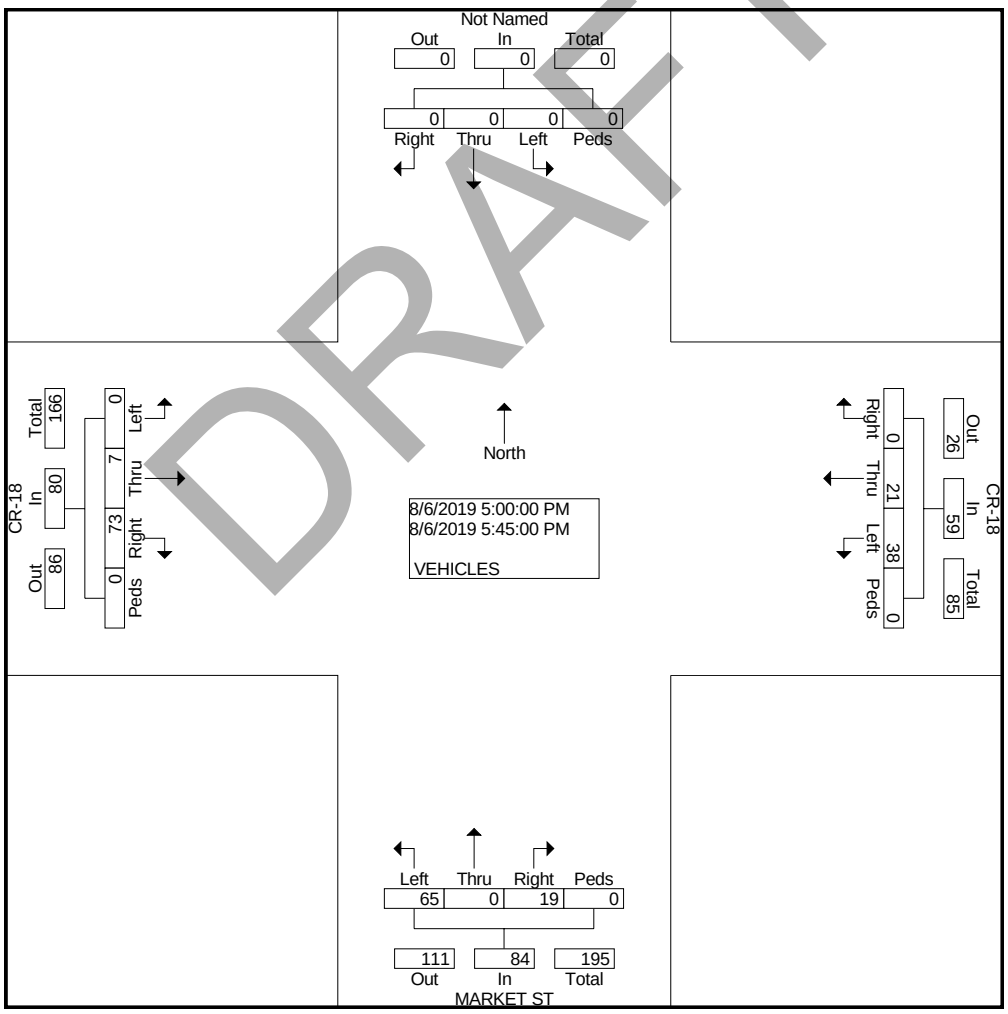

DRAFT

COUNTER MEASURES INC.

1889 YORK STREET
DENVER,COLORADO 80206
303-333-7409

Location: MARKET ST. N/O HWY. 76
City: KEENESBURG
County: WELD
Direction: NB-SB

Site Code: 190513
Station ID: 190513

Start Time	05-Aug-19 NB	05-Aug-19 SB	06-Aug-19 NB	06-Aug-19 SB	07-Aug-19 NB	07-Aug-19 SB	08-Aug-19 NB	08-Aug-19 SB	09-Aug-19 NB	09-Aug-19 SB	Weekday Average NB	Weekday Average SB	10-Aug-19 NB	10-Aug-19 SB	11-Aug-19 NB	11-Aug-19 SB
12:00 AM	*	*	5	5	*	*	*	*	*	*	5	5	*	*	*	*
01:00	*	*	2	1	*	*	*	*	*	*	2	1	*	*	*	*
02:00	*	*	0	2	*	*	*	*	*	*	0	2	*	*	*	*
03:00	*	*	3	2	*	*	*	*	*	*	3	2	*	*	*	*
04:00	*	*	5	7	*	*	*	*	*	*	5	7	*	*	*	*
05:00	*	*	51	26	*	*	*	*	*	*	51	26	*	*	*	*
06:00	*	*	**130**	57	*	*	*	*	*	*	**130**	57	*	*	*	*
07:00	*	*	106	67	*	*	*	*	*	*	106	67	*	*	*	*
08:00	*	*	64	66	*	*	*	*	*	*	64	66	*	*	*	*
09:00	*	*	73	60	*	*	*	*	*	*	73	60	*	*	*	*
10:00	*	*	88	74	*	*	*	*	*	*	88	74	*	*	*	*
11:00	*	*	77	**96**	*	*	*	*	*	*	77	**96**	*	*	*	*
12:00 PM	*	*	88	80	*	*	*	*	*	*	88	80	*	*	*	*
01:00	*	*	84	63	*	*	*	*	*	*	84	63	*	*	*	*
02:00	*	*	73	88	*	*	*	*	*	*	73	88	*	*	*	*
03:00	*	*	84	78	*	*	*	*	*	*	84	78	*	*	*	*
04:00	*	*	77	84	*	*	*	*	*	*	77	84	*	*	*	*
05:00	*	*	**93**	**122**	*	*	*	*	*	*	**93**	**122**	*	*	*	*
06:00	*	*	67	61	*	*	*	*	*	*	67	61	*	*	*	*
07:00	*	*	29	35	*	*	*	*	*	*	29	35	*	*	*	*
08:00	*	*	27	20	*	*	*	*	*	*	27	20	*	*	*	*
09:00	*	*	24	22	*	*	*	*	*	*	24	22	*	*	*	*
10:00	*	*	14	5	*	*	*	*	*	*	14	5	*	*	*	*
11:00	*	*	8	8	*	*	*	*	*	*	8	8	*	*	*	*
Total	0	0	1272	1129	0	0	0	0	0	0	1272	1129	0	0	0	0
Day	0		2401		0		0		0		2401		0		0	
AM Peak	-	-	06:00	11:00	-	-	-	-	-	-	06:00	11:00	-	-	-	-
Vol.	-	-	130	96	-	-	-	-	-	-	130	96	-	-	-	-
PM Peak	-	-	17:00	17:00	-	-	-	-	-	-	17:00	17:00	-	-	-	-
Vol.	-	-	93	122	-	-	-	-	-	-	93	122	-	-	-	-
Comb. Total	0		2401		0		0		0		2401		0		0	
ADT	ADT 2,440		AADT 2,440													

DRAFT

LEVEL OF SERVICE DEFINITIONS

From *Highway Capacity Manual*, Transportation Research Board, 2016, 6th Edition

UNSIGNALIZED INTERSECTION LEVEL OF SERVICE (LOS)

Applicable to Two-Way Stop Control, All-Way Stop Control, and Roundabouts

LOS	Average Vehicle Control Delay	Operational Characteristics
A	<10 seconds	Normally, vehicles on the stop-controlled approach only have to wait up to 10 seconds before being able to clear the intersection. Left-turning vehicles on the uncontrolled street do not have to wait to make their turn.
B	10 to 15 seconds	Vehicles on the stop-controlled approach will experience delays before being able to clear the intersection. The delay could be up to 15 seconds. Left-turning vehicles on the uncontrolled street may have to wait to make their turn.
C	15 to 25 seconds	Vehicles on the stop-controlled approach can expect delays in the range of 15 to 25 seconds before clearing the intersection. Motorists may begin to take chances due to the long delays, thereby posing a safety risk to through traffic. Left-turning vehicles on the uncontrolled street will now be required to wait to make their turn causing a queue to be created in the turn lane.
D	25 to 35 seconds	This is the point at which a traffic signal may be warranted for this intersection. The delays for the stop-controlled intersection are not considered to be excessive. The length of the queue may begin to block other public and private access points.
E	35 to 50 seconds	The delays for all critical traffic movements are considered to be unacceptable. The length of the queues for the stop-controlled approaches as well as the left-turn movements are extremely long. There is a high probability that this intersection will meet traffic signal warrants. The ability to install a traffic signal is affected by the location of other existing traffic signals. Consideration may be given to restricting the accesses by eliminating the left-turn movements from and to the stop-controlled approach.
F	>50 seconds	The delay for the critical traffic movements are probably in excess of 100 seconds. The length of the queues are extremely long. Motorists are selecting alternative routes due to the long delays. The only remedy for these long delays is installing a traffic signal or restricting the accesses. The potential for accidents at this intersection are extremely high due to motorist taking more risky chances. If the median permits, motorists begin making two-stage left-turns.

DRAFT

Intersection	
Intersection Delay, s/veh	7.3
Intersection LOS	A

Movement	EBT	EBR	WBL	WBT	NBL	NBR
Lane Configurations						
Traffic Vol, veh/h	19	39	23	11	38	45
Future Vol, veh/h	19	39	23	11	38	45
Peak Hour Factor	0.81	0.81	0.81	0.81	0.81	0.81
Heavy Vehicles, %	2	2	2	2	2	2
Mvmt Flow	23	48	28	14	47	56
Number of Lanes	1	0	0	1	1	0

Approach	EB	WB	NB
Opposing Approach	WB	EB	
Opposing Lanes	1	1	0
Conflicting Approach Left		NB	EB
Conflicting Lanes Left	0	1	1
Conflicting Approach Right	NB		WB
Conflicting Lanes Right	1	0	1
HCM Control Delay	7.1	7.6	7.4
HCM LOS	A	A	A

Lane	NBLn1	EBLn1	WBLn1
Vol Left, %	46%	0%	68%
Vol Thru, %	0%	33%	32%
Vol Right, %	54%	67%	0%
Sign Control	Stop	Stop	Stop
Traffic Vol by Lane	83	58	34
LT Vol	38	0	23
Through Vol	0	19	11
RT Vol	45	39	0
Lane Flow Rate	102	72	42
Geometry Grp	1	1	1
Degree of Util (X)	0.111	0.074	0.05
Departure Headway (Hd)	3.896	3.741	4.305
Convergence, Y/N	Yes	Yes	Yes
Cap	915	950	827
Service Time	1.94	1.793	2.354
HCM Lane V/C Ratio	0.111	0.076	0.051
HCM Control Delay	7.4	7.1	7.6
HCM Lane LOS	A	A	A
HCM 95th-tile Q	0.4	0.2	0.2

DRAFT

Intersection	
Int Delay, s/veh	0.7

Movement	EBL	EBT	EBR	WBL	WBT	WBR	NBL	NBT	NBR	SBL	SBT	SBR
Lane Configurations												
Traffic Vol, veh/h	4	0	0	4	0	8	1	160	3	5	97	5
Future Vol, veh/h	4	0	0	4	0	8	1	160	3	5	97	5
Conflicting Peds, #/hr	0	0	0	0	0	0	0	0	0	0	0	0
Sign Control	Stop	Stop	Stop	Stop	Stop	Stop	Free	Free	Free	Free	Free	Free
RT Channelized	-	-	None	-	-	None	-	-	None	-	-	None
Storage Length	-	-	-	-	-	-	-	-	-	-	-	-
Veh in Median Storage, #	-	0	-	-	0	-	-	0	-	-	0	-
Grade, %	-	0	-	-	0	-	-	0	-	-	0	-
Peak Hour Factor	94	94	94	94	94	94	94	94	94	94	94	94
Heavy Vehicles, %	2	2	2	2	2	2	2	2	2	2	2	2
Mvmt Flow	4	0	0	4	0	9	1	170	3	5	103	5

Major/Minor	Minor2			Minor1			Major1			Major2		
Conflicting Flow All	294	291	106	290	292	172	108	0	0	173	0	0
Stage 1	116	116	-	174	174	-	-	-	-	-	-	-
Stage 2	178	175	-	116	118	-	-	-	-	-	-	-
Critical Hdwy	7.12	6.52	6.22	7.12	6.52	6.22	4.12	-	-	4.12	-	-
Critical Hdwy Stg 1	6.12	5.52	-	6.12	5.52	-	-	-	-	-	-	-
Critical Hdwy Stg 2	6.12	5.52	-	6.12	5.52	-	-	-	-	-	-	-
Follow-up Hdwy	3.518	4.018	3.318	3.518	4.018	3.318	2.218	-	-	2.218	-	-
Pot Cap-1 Maneuver	658	619	948	662	619	872	1483	-	-	1404	-	-
Stage 1	889	800	-	828	755	-	-	-	-	-	-	-
Stage 2	824	754	-	889	798	-	-	-	-	-	-	-
Platoon blocked, %								-	-		-	-
Mov Cap-1 Maneuver	649	616	948	659	616	872	1483	-	-	1404	-	-
Mov Cap-2 Maneuver	649	616	-	659	616	-	-	-	-	-	-	-
Stage 1	888	797	-	827	754	-	-	-	-	-	-	-
Stage 2	815	753	-	885	795	-	-	-	-	-	-	-

Approach	EB	WB	NB	SB
HCM Control Delay, s	10.6	9.7	0	0.4
HCM LOS	B	A		

Minor Lane/Major Mvmt	NBL	NBT	NBR	EBLn1	WBLn1	SBL	SBT	SBR
Capacity (veh/h)	1483	-	-	649	787	1404	-	-
HCM Lane V/C Ratio	0.001	-	-	0.007	0.016	0.004	-	-
HCM Control Delay (s)	7.4	0	-	10.6	9.7	7.6	0	-
HCM Lane LOS	A	A	-	B	A	A	A	-
HCM 95th %tile Q(veh)	0	-	-	0	0	0	-	-

DRAFT

Intersection	
Intersection Delay, s/veh	7.6
Intersection LOS	A

Movement	EBT	EBR	WBL	WBT	NBL	NBR
Lane Configurations						
Traffic Vol, veh/h	7	73	38	21	65	19
Future Vol, veh/h	7	73	38	21	65	19
Peak Hour Factor	0.80	0.80	0.80	0.80	0.80	0.80
Heavy Vehicles, %	2	2	2	2	2	2
Mvmt Flow	9	91	48	26	81	24
Number of Lanes	1	0	0	1	1	0

Approach	EB	WB	NB
Opposing Approach	WB	EB	
Opposing Lanes	1	1	0
Conflicting Approach Left		NB	EB
Conflicting Lanes Left	0	1	1
Conflicting Approach Right	NB		WB
Conflicting Lanes Right	1	0	1
HCM Control Delay	7.1	7.8	7.9
HCM LOS	A	A	A

Lane	NBLn1	EBLn1	WBLn1
Vol Left, %	77%	0%	64%
Vol Thru, %	0%	9%	36%
Vol Right, %	23%	91%	0%
Sign Control	Stop	Stop	Stop
Traffic Vol by Lane	84	80	59
LT Vol	65	0	38
Through Vol	0	7	21
RT Vol	19	73	0
Lane Flow Rate	105	100	74
Geometry Grp	1	1	1
Degree of Util (X)	0.124	0.101	0.089
Departure Headway (Hd)	4.252	3.626	4.324
Convergence, Y/N	Yes	Yes	Yes
Cap	836	972	820
Service Time	2.318	1.708	2.397
HCM Lane V/C Ratio	0.126	0.103	0.09
HCM Control Delay	7.9	7.1	7.8
HCM Lane LOS	A	A	A
HCM 95th-tile Q	0.4	0.3	0.3

DRAFT

Intersection	
Int Delay, s/veh	0.4

Movement	EBL	EBT	EBR	WBL	WBT	WBR	NBL	NBT	NBR	SBL	SBT	SBR
Lane Configurations												
Traffic Vol, veh/h	3	0	2	2	0	3	3	260	1	6	285	4
Future Vol, veh/h	3	0	2	2	0	3	3	260	1	6	285	4
Conflicting Peds, #/hr	0	0	0	0	0	0	0	0	0	0	0	0
Sign Control	Stop	Stop	Stop	Stop	Stop	Stop	Free	Free	Free	Free	Free	Free
RT Channelized	-	-	None	-	-	None	-	-	None	-	-	None
Storage Length	-	-	-	-	-	-	-	-	-	-	-	-
Veh in Median Storage, #	-	0	-	-	0	-	-	0	-	-	0	-
Grade, %	-	0	-	-	0	-	-	0	-	-	0	-
Peak Hour Factor	85	85	85	85	85	85	85	85	85	85	85	85
Heavy Vehicles, %	2	2	2	2	2	2	2	2	2	2	2	2
Mvmt Flow	4	0	2	2	0	4	4	306	1	7	335	5

Major/Minor	Minor2			Minor1			Major1			Major2		
Conflicting Flow All	669	667	338	668	669	307	340	0	0	307	0	0
Stage 1	352	352	-	315	315	-	-	-	-	-	-	-
Stage 2	317	315	-	353	354	-	-	-	-	-	-	-
Critical Hdwy	7.12	6.52	6.22	7.12	6.52	6.22	4.12	-	-	4.12	-	-
Critical Hdwy Stg 1	6.12	5.52	-	6.12	5.52	-	-	-	-	-	-	-
Critical Hdwy Stg 2	6.12	5.52	-	6.12	5.52	-	-	-	-	-	-	-
Follow-up Hdwy	3.518	4.018	3.318	3.518	4.018	3.318	2.218	-	-	2.218	-	-
Pot Cap-1 Maneuver	371	380	704	372	379	733	1219	-	-	1254	-	-
Stage 1	665	632	-	696	656	-	-	-	-	-	-	-
Stage 2	694	656	-	664	630	-	-	-	-	-	-	-
Platoon blocked, %								-	-		-	-
Mov Cap-1 Maneuver	366	376	704	368	375	733	1219	-	-	1254	-	-
Mov Cap-2 Maneuver	366	376	-	368	375	-	-	-	-	-	-	-
Stage 1	662	628	-	693	653	-	-	-	-	-	-	-
Stage 2	688	653	-	657	626	-	-	-	-	-	-	-

Approach	EB	WB	NB	SB
HCM Control Delay, s	13.1	11.9	0.1	0.2
HCM LOS	B	B		

Minor Lane/Major Mvmt	NBL	NBT	NBR	EBLn1	WBLn1	SBL	SBT	SBR
Capacity (veh/h)	1219	-	-	453	525	1254	-	-
HCM Lane V/C Ratio	0.003	-	-	0.013	0.011	0.006	-	-
HCM Control Delay (s)	8	0	-	13.1	11.9	7.9	0	-
HCM Lane LOS	A	A	-	B	B	A	A	-
HCM 95th %tile Q(veh)	0	-	-	0	0	0	-	-

DRAFT

Intersection	
Intersection Delay, s/veh	7.4
Intersection LOS	A

Movement	EBT	EBR	WBL	WBT	NBL	NBR
Lane Configurations						
Traffic Vol, veh/h	20	40	24	11	39	46
Future Vol, veh/h	20	40	24	11	39	46
Peak Hour Factor	0.80	0.80	0.80	0.80	0.80	0.80
Heavy Vehicles, %	2	2	2	2	2	2
Mvmt Flow	25	50	30	14	49	58
Number of Lanes	1	0	0	1	1	0

Approach	EB	WB	NB
Opposing Approach	WB	EB	
Opposing Lanes	1	1	0
Conflicting Approach Left		NB	EB
Conflicting Lanes Left	0	1	1
Conflicting Approach Right	NB		WB
Conflicting Lanes Right	1	0	1
HCM Control Delay	7.1	7.6	7.5
HCM LOS	A	A	A

Lane	NBLn1	EBLn1	WBLn1
Vol Left, %	46%	0%	69%
Vol Thru, %	0%	33%	31%
Vol Right, %	54%	67%	0%
Sign Control	Stop	Stop	Stop
Traffic Vol by Lane	85	60	35
LT Vol	39	0	24
Through Vol	0	20	11
RT Vol	46	40	0
Lane Flow Rate	106	75	44
Geometry Grp	1	1	1
Degree of Util (X)	0.115	0.078	0.052
Departure Headway (Hd)	3.906	3.753	4.315
Convergence, Y/N	Yes	Yes	Yes
Cap	913	947	825
Service Time	1.952	1.806	2.367
HCM Lane V/C Ratio	0.116	0.079	0.053
HCM Control Delay	7.5	7.1	7.6
HCM Lane LOS	A	A	A
HCM 95th-tile Q	0.4	0.3	0.2

DRAFT

Intersection	
Int Delay, s/veh	0.7

Movement	EBL	EBT	EBR	WBL	WBT	WBR	NBL	NBT	NBR	SBL	SBT	SBR
Lane Configurations												
Traffic Vol, veh/h	4	0	1	4	0	8	1	165	3	5	100	5
Future Vol, veh/h	4	0	1	4	0	8	1	165	3	5	100	5
Conflicting Peds, #/hr	0	0	0	0	0	0	0	0	0	0	0	0
Sign Control	Stop	Stop	Stop	Stop	Stop	Stop	Free	Free	Free	Free	Free	Free
RT Channelized	-	-	None	-	-	None	-	-	None	-	-	None
Storage Length	-	-	-	-	-	-	-	-	-	-	-	-
Veh in Median Storage, #	-	0	-	-	0	-	-	0	-	-	0	-
Grade, %	-	0	-	-	0	-	-	0	-	-	0	-
Peak Hour Factor	94	94	94	94	94	94	94	94	94	94	94	94
Heavy Vehicles, %	2	2	2	2	2	2	2	2	2	2	2	2
Mvmt Flow	4	0	1	4	0	9	1	176	3	5	106	5

Major/Minor	Minor2			Minor1			Major1			Major2		
Conflicting Flow All	303	300	109	299	301	178	111	0	0	179	0	0
Stage 1	119	119	-	180	180	-	-	-	-	-	-	-
Stage 2	184	181	-	119	121	-	-	-	-	-	-	-
Critical Hdwy	7.12	6.52	6.22	7.12	6.52	6.22	4.12	-	-	4.12	-	-
Critical Hdwy Stg 1	6.12	5.52	-	6.12	5.52	-	-	-	-	-	-	-
Critical Hdwy Stg 2	6.12	5.52	-	6.12	5.52	-	-	-	-	-	-	-
Follow-up Hdwy	3.518	4.018	3.318	3.518	4.018	3.318	2.218	-	-	2.218	-	-
Pot Cap-1 Maneuver	649	612	945	653	612	865	1479	-	-	1397	-	-
Stage 1	885	797	-	822	750	-	-	-	-	-	-	-
Stage 2	818	750	-	885	796	-	-	-	-	-	-	-
Platoon blocked, %								-	-		-	-
Mov Cap-1 Maneuver	640	609	945	650	609	865	1479	-	-	1397	-	-
Mov Cap-2 Maneuver	640	609	-	650	609	-	-	-	-	-	-	-
Stage 1	884	794	-	821	749	-	-	-	-	-	-	-
Stage 2	809	749	-	880	793	-	-	-	-	-	-	-

Approach	EB	WB	NB	SB
HCM Control Delay, s	10.3	9.7	0	0.3
HCM LOS	B	A		

Minor Lane/Major Mvmt	NBL	NBT	NBR	EBLn1	WBLn1	SBL	SBT	SBR
Capacity (veh/h)	1479	-	-	684	779	1397	-	-
HCM Lane V/C Ratio	0.001	-	-	0.008	0.016	0.004	-	-
HCM Control Delay (s)	7.4	0	-	10.3	9.7	7.6	0	-
HCM Lane LOS	A	A	-	B	A	A	A	-
HCM 95th %tile Q(veh)	0	-	-	0	0.1	0	-	-

DRAFT

Intersection	
Intersection Delay, s/veh	7.7
Intersection LOS	A

Movement	EBT	EBR	WBL	WBT	NBL	NBR
Lane Configurations						
Traffic Vol, veh/h	7	75	39	22	67	20
Future Vol, veh/h	7	75	39	22	67	20
Peak Hour Factor	0.80	0.80	0.80	0.80	0.80	0.80
Heavy Vehicles, %	2	2	2	2	2	2
Mvmt Flow	9	94	49	28	84	25
Number of Lanes	1	0	0	1	1	0

Approach	EB	WB	NB
Opposing Approach	WB	EB	
Opposing Lanes	1	1	0
Conflicting Approach Left		NB	EB
Conflicting Lanes Left	0	1	1
Conflicting Approach Right	NB		WB
Conflicting Lanes Right	1	0	1
HCM Control Delay	7.1	7.9	8
HCM LOS	A	A	A

Lane	NBLn1	EBLn1	WBLn1
Vol Left, %	77%	0%	64%
Vol Thru, %	0%	9%	36%
Vol Right, %	23%	91%	0%
Sign Control	Stop	Stop	Stop
Traffic Vol by Lane	87	82	61
LT Vol	67	0	39
Through Vol	0	7	22
RT Vol	20	75	0
Lane Flow Rate	109	102	76
Geometry Grp	1	1	1
Degree of Util (X)	0.129	0.103	0.092
Departure Headway (Hd)	4.257	3.635	4.333
Convergence, Y/N	Yes	Yes	Yes
Cap	834	970	818
Service Time	2.325	1.72	2.408
HCM Lane V/C Ratio	0.131	0.105	0.093
HCM Control Delay	8	7.1	7.9
HCM Lane LOS	A	A	A
HCM 95th-tile Q	0.4	0.3	0.3

DRAFT

Intersection	
Int Delay, s/veh	0.4

Movement	EBL	EBT	EBR	WBL	WBT	WBR	NBL	NBT	NBR	SBL	SBT	SBR
Lane Configurations												
Traffic Vol, veh/h	3	0	2	2	0	3	3	270	1	6	295	4
Future Vol, veh/h	3	0	2	2	0	3	3	270	1	6	295	4
Conflicting Peds, #/hr	0	0	0	0	0	0	0	0	0	0	0	0
Sign Control	Stop	Stop	Stop	Stop	Stop	Stop	Free	Free	Free	Free	Free	Free
RT Channelized	-	-	None	-	-	None	-	-	None	-	-	None
Storage Length	-	-	-	-	-	-	-	-	-	-	-	-
Veh in Median Storage, #	-	0	-	-	0	-	-	0	-	-	0	-
Grade, %	-	0	-	-	0	-	-	0	-	-	0	-
Peak Hour Factor	85	85	85	85	85	85	85	85	85	85	85	85
Heavy Vehicles, %	2	2	2	2	2	2	2	2	2	2	2	2
Mvmt Flow	4	0	2	2	0	4	4	318	1	7	347	5

Major/Minor	Minor2			Minor1			Major1			Major2		
Conflicting Flow All	693	691	350	692	693	319	352	0	0	319	0	0
Stage 1	364	364	-	327	327	-	-	-	-	-	-	-
Stage 2	329	327	-	365	366	-	-	-	-	-	-	-
Critical Hdwy	7.12	6.52	6.22	7.12	6.52	6.22	4.12	-	-	4.12	-	-
Critical Hdwy Stg 1	6.12	5.52	-	6.12	5.52	-	-	-	-	-	-	-
Critical Hdwy Stg 2	6.12	5.52	-	6.12	5.52	-	-	-	-	-	-	-
Follow-up Hdwy	3.518	4.018	3.318	3.518	4.018	3.318	2.218	-	-	2.218	-	-
Pot Cap-1 Maneuver	358	368	693	358	367	722	1207	-	-	1241	-	-
Stage 1	655	624	-	686	648	-	-	-	-	-	-	-
Stage 2	684	648	-	654	623	-	-	-	-	-	-	-
Platoon blocked, %								-	-		-	-
Mov Cap-1 Maneuver	353	364	693	354	363	722	1207	-	-	1241	-	-
Mov Cap-2 Maneuver	353	364	-	354	363	-	-	-	-	-	-	-
Stage 1	652	620	-	683	645	-	-	-	-	-	-	-
Stage 2	678	645	-	647	619	-	-	-	-	-	-	-

Approach	EB	WB	NB	SB
HCM Control Delay, s	13.3	12.1	0.1	0.2
HCM LOS	B	B		

Minor Lane/Major Mvmt	NBL	NBT	NBR	EBLn1	WBLn1	SBL	SBT	SBR
Capacity (veh/h)	1207	-	-	439	510	1241	-	-
HCM Lane V/C Ratio	0.003	-	-	0.013	0.012	0.006	-	-
HCM Control Delay (s)	8	0	-	13.3	12.1	7.9	0	-
HCM Lane LOS	A	A	-	B	B	A	A	-
HCM 95th %tile Q(veh)	0	-	-	0	0	0	-	-

DRAFT

Intersection	
Int Delay, s/veh	6.3

Movement	EBL	EBR	NBL	NBT	SBT	SBR
Lane Configurations						
Traffic Vol, veh/h	17	163	179	80	50	27
Future Vol, veh/h	17	163	179	80	50	27
Conflicting Peds, #/hr	0	0	0	0	0	0
Sign Control	Stop	Stop	Free	Free	Free	Free
RT Channelized	-	None	-	None	-	None
Storage Length	0	-	75	-	-	-
Veh in Median Storage, #	0	-	-	0	0	-
Grade, %	0	-	-	0	0	-
Peak Hour Factor	88	88	88	88	88	88
Heavy Vehicles, %	2	2	2	2	2	2
Mvmt Flow	19	185	203	91	57	31

Major/Minor	Minor2		Major1		Major2	
Conflicting Flow All	570	73	88	0	-	0
Stage 1	73	-	-	-	-	-
Stage 2	497	-	-	-	-	-
Critical Hdwy	6.42	6.22	4.12	-	-	-
Critical Hdwy Stg 1	5.42	-	-	-	-	-
Critical Hdwy Stg 2	5.42	-	-	-	-	-
Follow-up Hdwy	3.518	3.318	2.218	-	-	-
Pot Cap-1 Maneuver	483	989	1508	-	-	-
Stage 1	950	-	-	-	-	-
Stage 2	611	-	-	-	-	-
Platoon blocked, %				-	-	-
Mov Cap-1 Maneuver	418	989	1508	-	-	-
Mov Cap-2 Maneuver	418	-	-	-	-	-
Stage 1	822	-	-	-	-	-
Stage 2	611	-	-	-	-	-

Approach	EB	NB	SB
HCM Control Delay, s	10.4	5.4	0
HCM LOS	B		

Minor Lane/Major Mvmt	NBL	NBT	EBLn1	SBT	SBR
Capacity (veh/h)	1508	-	876	-	-
HCM Lane V/C Ratio	0.135	-	0.233	-	-
HCM Control Delay (s)	7.8	-	10.4	-	-
HCM Lane LOS	A	-	B	-	-
HCM 95th %tile Q(veh)	0.5	-	0.9	-	-

DRAFT

Intersection	
Intersection Delay, s/veh	7.4
Intersection LOS	A

Movement	EBT	EBR	WBL	WBT	NBL	NBR
Lane Configurations						
Traffic Vol, veh/h	20	49	31	11	46	51
Future Vol, veh/h	20	49	31	11	46	51
Peak Hour Factor	0.88	0.88	0.88	0.88	0.88	0.88
Heavy Vehicles, %	2	2	2	2	2	2
Mvmt Flow	23	56	35	13	52	58
Number of Lanes	1	0	0	1	1	0

Approach	EB	WB	NB
Opposing Approach	WB	EB	
Opposing Lanes	1	1	0
Conflicting Approach Left		NB	EB
Conflicting Lanes Left	0	1	1
Conflicting Approach Right	NB		WB
Conflicting Lanes Right	1	0	1
HCM Control Delay	7.1	7.7	7.5
HCM LOS	A	A	A

Lane	NBLn1	EBLn1	WBLn1
Vol Left, %	47%	0%	74%
Vol Thru, %	0%	29%	26%
Vol Right, %	53%	71%	0%
Sign Control	Stop	Stop	Stop
Traffic Vol by Lane	97	69	42
LT Vol	46	0	31
Through Vol	0	20	11
RT Vol	51	49	0
Lane Flow Rate	110	78	48
Geometry Grp	1	1	1
Degree of Util (X)	0.12	0.081	0.057
Departure Headway (Hd)	3.93	3.737	4.337
Convergence, Y/N	Yes	Yes	Yes
Cap	906	950	821
Service Time	1.979	1.794	2.39
HCM Lane V/C Ratio	0.121	0.082	0.058
HCM Control Delay	7.5	7.1	7.7
HCM Lane LOS	A	A	A
HCM 95th-tile Q	0.4	0.3	0.2

DRAFT

Intersection	
Int Delay, s/veh	0.7

Movement	EBL	EBT	EBR	WBL	WBT	WBR	NBL	NBT	NBR	SBL	SBT	SBR
Lane Configurations												
Traffic Vol, veh/h	7	0	1	4	0	12	1	243	3	8	163	7
Future Vol, veh/h	7	0	1	4	0	12	1	243	3	8	163	7
Conflicting Peds, #/hr	0	0	0	0	0	0	0	0	0	0	0	0
Sign Control	Stop	Stop	Stop	Stop	Stop	Stop	Free	Free	Free	Free	Free	Free
RT Channelized	-	-	None	-	-	None	-	-	None	-	-	None
Storage Length	-	-	-	-	-	-	-	-	-	-	-	-
Veh in Median Storage, #	-	0	-	-	0	-	-	0	-	-	0	-
Grade, %	-	0	-	-	0	-	-	0	-	-	0	-
Peak Hour Factor	92	92	92	92	92	92	92	92	92	92	92	92
Heavy Vehicles, %	2	2	2	2	2	2	2	2	2	2	2	2
Mvmt Flow	8	0	1	4	0	13	1	264	3	9	177	8

Major/Minor	Minor2			Minor1			Major1			Major2		
Conflicting Flow All	473	468	181	468	471	266	185	0	0	267	0	0
Stage 1	199	199	-	268	268	-	-	-	-	-	-	-
Stage 2	274	269	-	200	203	-	-	-	-	-	-	-
Critical Hdwy	7.12	6.52	6.22	7.12	6.52	6.22	4.12	-	-	4.12	-	-
Critical Hdwy Stg 1	6.12	5.52	-	6.12	5.52	-	-	-	-	-	-	-
Critical Hdwy Stg 2	6.12	5.52	-	6.12	5.52	-	-	-	-	-	-	-
Follow-up Hdwy	3.518	4.018	3.318	3.518	4.018	3.318	2.218	-	-	2.218	-	-
Pot Cap-1 Maneuver	501	493	862	505	491	773	1390	-	-	1297	-	-
Stage 1	803	736	-	738	687	-	-	-	-	-	-	-
Stage 2	732	687	-	802	733	-	-	-	-	-	-	-
Platoon blocked, %								-	-		-	-
Mov Cap-1 Maneuver	489	489	862	501	487	773	1390	-	-	1297	-	-
Mov Cap-2 Maneuver	489	489	-	501	487	-	-	-	-	-	-	-
Stage 1	802	730	-	737	686	-	-	-	-	-	-	-
Stage 2	719	686	-	795	727	-	-	-	-	-	-	-

Approach	EB	WB	NB	SB
HCM Control Delay, s	12.1	10.4	0	0.4
HCM LOS	B	B		

Minor Lane/Major Mvmt	NBL	NBT	NBR	EBLn1	WBLn1	SBL	SBT	SBR
Capacity (veh/h)	1390	-	-	517	681	1297	-	-
HCM Lane V/C Ratio	0.001	-	-	0.017	0.026	0.007	-	-
HCM Control Delay (s)	7.6	0	-	12.1	10.4	7.8	0	-
HCM Lane LOS	A	A	-	B	B	A	A	-
HCM 95th %tile Q(veh)	0	-	-	0.1	0.1	0	-	-

DRAFT

Intersection	
Int Delay, s/veh	6.7

Movement	EBL	EBR	NBL	NBT	SBT	SBR
Lane Configurations						
Traffic Vol, veh/h	27	191	202	77	107	25
Future Vol, veh/h	27	191	202	77	107	25
Conflicting Peds, #/hr	0	0	0	0	0	0
Sign Control	Stop	Stop	Free	Free	Free	Free
RT Channelized	-	None	-	None	-	None
Storage Length	0	-	75	-	-	-
Veh in Median Storage, #	0	-	-	0	0	-
Grade, %	0	-	-	0	0	-
Peak Hour Factor	88	88	88	88	88	88
Heavy Vehicles, %	2	2	2	2	2	2
Mvmt Flow	31	217	230	88	122	28

Major/Minor	Minor2		Major1		Major2	
Conflicting Flow All	684	136	150	0	-	0
Stage 1	136	-	-	-	-	-
Stage 2	548	-	-	-	-	-
Critical Hdwy	6.42	6.22	4.12	-	-	-
Critical Hdwy Stg 1	5.42	-	-	-	-	-
Critical Hdwy Stg 2	5.42	-	-	-	-	-
Follow-up Hdwy	3.518	3.318	2.218	-	-	-
Pot Cap-1 Maneuver	414	913	1431	-	-	-
Stage 1	890	-	-	-	-	-
Stage 2	579	-	-	-	-	-
Platoon blocked, %				-	-	-
Mov Cap-1 Maneuver	347	913	1431	-	-	-
Mov Cap-2 Maneuver	347	-	-	-	-	-
Stage 1	747	-	-	-	-	-
Stage 2	579	-	-	-	-	-

Approach	EB	NB	SB
HCM Control Delay, s	12	5.8	0
HCM LOS	B		

Minor Lane/Major Mvmt	NBL	NBT	EBLn1	SBT	SBR
Capacity (veh/h)	1431	-	760	-	-
HCM Lane V/C Ratio	0.16	-	0.326	-	-
HCM Control Delay (s)	8	-	12	-	-
HCM Lane LOS	A	-	B	-	-
HCM 95th %tile Q(veh)	0.6	-	1.4	-	-

DRAFT

Intersection	
Intersection Delay, s/veh	7.7
Intersection LOS	A

Movement	EBT	EBR	WBL	WBT	NBL	NBR
Lane Configurations						
Traffic Vol, veh/h	7	85	47	22	77	27
Future Vol, veh/h	7	85	47	22	77	27
Peak Hour Factor	0.88	0.88	0.88	0.88	0.88	0.88
Heavy Vehicles, %	2	2	2	2	2	2
Mvmt Flow	8	97	53	25	88	31
Number of Lanes	1	0	0	1	1	0

Approach	EB	WB	NB
Opposing Approach	WB	EB	
Opposing Lanes	1	1	0
Conflicting Approach Left		NB	EB
Conflicting Lanes Left	0	1	1
Conflicting Approach Right	NB		WB
Conflicting Lanes Right	1	0	1
HCM Control Delay	7.2	7.9	8
HCM LOS	A	A	A

Lane	NBLn1	EBLn1	WBLn1
Vol Left, %	74%	0%	68%
Vol Thru, %	0%	8%	32%
Vol Right, %	26%	92%	0%
Sign Control	Stop	Stop	Stop
Traffic Vol by Lane	104	92	69
LT Vol	77	0	47
Through Vol	0	7	22
RT Vol	27	85	0
Lane Flow Rate	118	105	78
Geometry Grp	1	1	1
Degree of Util (X)	0.139	0.106	0.095
Departure Headway (Hd)	4.24	3.647	4.359
Convergence, Y/N	Yes	Yes	Yes
Cap	837	965	812
Service Time	2.312	1.737	2.44
HCM Lane V/C Ratio	0.141	0.109	0.096
HCM Control Delay	8	7.2	7.9
HCM Lane LOS	A	A	A
HCM 95th-tile Q	0.5	0.4	0.3

DRAFT

Intersection	
Int Delay, s/veh	0.5

Movement	EBL	EBT	EBR	WBL	WBT	WBR	NBL	NBT	NBR	SBL	SBT	SBR
Lane Configurations												
Traffic Vol, veh/h	6	0	2	2	0	7	3	359	1	10	378	7
Future Vol, veh/h	6	0	2	2	0	7	3	359	1	10	378	7
Conflicting Peds, #/hr	0	0	0	0	0	0	0	0	0	0	0	0
Sign Control	Stop	Stop	Stop	Stop	Stop	Stop	Free	Free	Free	Free	Free	Free
RT Channelized	-	-	None	-	-	None	-	-	None	-	-	None
Storage Length	-	-	-	-	-	-	-	-	-	-	-	-
Veh in Median Storage, #	-	0	-	-	0	-	-	0	-	-	0	-
Grade, %	-	0	-	-	0	-	-	0	-	-	0	-
Peak Hour Factor	88	88	88	88	88	88	88	88	88	88	88	88
Heavy Vehicles, %	2	2	2	2	2	2	2	2	2	2	2	2
Mvmt Flow	7	0	2	2	0	8	3	408	1	11	430	8

Major/Minor	Minor2			Minor1			Major1			Major2		
Conflicting Flow All	875	871	434	872	875	409	438	0	0	409	0	0
Stage 1	456	456	-	415	415	-	-	-	-	-	-	-
Stage 2	419	415	-	457	460	-	-	-	-	-	-	-
Critical Hdwy	7.12	6.52	6.22	7.12	6.52	6.22	4.12	-	-	4.12	-	-
Critical Hdwy Stg 1	6.12	5.52	-	6.12	5.52	-	-	-	-	-	-	-
Critical Hdwy Stg 2	6.12	5.52	-	6.12	5.52	-	-	-	-	-	-	-
Follow-up Hdwy	3.518	4.018	3.318	3.518	4.018	3.318	2.218	-	-	2.218	-	-
Pot Cap-1 Maneuver	270	289	622	271	288	642	1122	-	-	1150	-	-
Stage 1	584	568	-	615	592	-	-	-	-	-	-	-
Stage 2	612	592	-	583	566	-	-	-	-	-	-	-
Platoon blocked, %								-	-		-	-
Mov Cap-1 Maneuver	264	284	622	267	283	642	1122	-	-	1150	-	-
Mov Cap-2 Maneuver	264	284	-	267	283	-	-	-	-	-	-	-
Stage 1	582	561	-	613	590	-	-	-	-	-	-	-
Stage 2	603	590	-	573	559	-	-	-	-	-	-	-

Approach	EB	WB	NB	SB
HCM Control Delay, s	17	12.5	0.1	0.2
HCM LOS	C	B		

Minor Lane/Major Mvmt	NBL	NBT	NBR	EBLn1	WBLn1	SBL	SBT	SBR
Capacity (veh/h)	1122	-	-	308	489	1150	-	-
HCM Lane V/C Ratio	0.003	-	-	0.03	0.021	0.01	-	-
HCM Control Delay (s)	8.2	0	-	17	12.5	8.2	0	-
HCM Lane LOS	A	A	-	C	B	A	A	-
HCM 95th %tile Q(veh)	0	-	-	0.1	0.1	0	-	-

DRAFT

Intersection	
Int Delay, s/veh	1.4

Movement	EBL	EBT	EBR	WBL	WBT	WBR	NBL	NBT	NBR	SBL	SBT	SBR
Lane Configurations												
Traffic Vol, veh/h	1	0	5	15	0	5	1	100	25	10	70	1
Future Vol, veh/h	1	0	5	15	0	5	1	100	25	10	70	1
Conflicting Peds, #/hr	0	0	0	0	0	0	0	0	0	0	0	0
Sign Control	Stop	Stop	Stop	Stop	Stop	Stop	Free	Free	Free	Free	Free	Free
RT Channelized	-	-	None	-	-	None	-	-	None	-	-	None
Storage Length	-	-	-	-	-	-	-	-	-	-	-	-
Veh in Median Storage, #	-	0	-	-	0	-	-	0	-	-	0	-
Grade, %	-	0	-	-	0	-	-	0	-	-	0	-
Peak Hour Factor	88	88	88	88	88	88	88	88	88	88	88	88
Heavy Vehicles, %	2	2	2	2	2	2	2	2	2	2	2	2
Mvmt Flow	1	0	6	17	0	6	1	114	28	11	80	1

Major/Minor	Minor2			Minor1			Major1			Major2		
Conflicting Flow All	236	247	81	236	233	128	81	0	0	142	0	0
Stage 1	103	103	-	130	130	-	-	-	-	-	-	-
Stage 2	133	144	-	106	103	-	-	-	-	-	-	-
Critical Hdwy	7.12	6.52	6.22	7.12	6.52	6.22	4.12	-	-	4.12	-	-
Critical Hdwy Stg 1	6.12	5.52	-	6.12	5.52	-	-	-	-	-	-	-
Critical Hdwy Stg 2	6.12	5.52	-	6.12	5.52	-	-	-	-	-	-	-
Follow-up Hdwy	3.518	4.018	3.318	3.518	4.018	3.318	2.218	-	-	2.218	-	-
Pot Cap-1 Maneuver	718	655	979	718	667	922	1517	-	-	1441	-	-
Stage 1	903	810	-	874	789	-	-	-	-	-	-	-
Stage 2	870	778	-	900	810	-	-	-	-	-	-	-
Platoon blocked, %								-	-		-	-
Mov Cap-1 Maneuver	709	649	979	709	661	922	1517	-	-	1441	-	-
Mov Cap-2 Maneuver	709	649	-	709	661	-	-	-	-	-	-	-
Stage 1	902	804	-	873	788	-	-	-	-	-	-	-
Stage 2	864	777	-	888	804	-	-	-	-	-	-	-

Approach	EB	WB	NB	SB
HCM Control Delay, s	8.9	9.9	0.1	0.9
HCM LOS	A	A		

Minor Lane/Major Mvmt	NBL	NBT	NBR	EBLn1	WBLn1	SBL	SBT	SBR
Capacity (veh/h)	1517	-	-	921	752	1441	-	-
HCM Lane V/C Ratio	0.001	-	-	0.007	0.03	0.008	-	-
HCM Control Delay (s)	7.4	0	-	8.9	9.9	7.5	0	-
HCM Lane LOS	A	A	-	A	A	A	A	-
HCM 95th %tile Q(veh)	0	-	-	0	0.1	0	-	-

DRAFT

Intersection	
Intersection Delay, s/veh	7.5
Intersection LOS	A

Movement	EBT	EBR	WBL	WBT	NBL	NBR
Lane Configurations						
Traffic Vol, veh/h	25	50	30	15	50	55
Future Vol, veh/h	25	50	30	15	50	55
Peak Hour Factor	0.88	0.88	0.88	0.88	0.88	0.88
Heavy Vehicles, %	2	2	2	2	2	2
Mvmt Flow	28	57	34	17	57	63
Number of Lanes	1	0	0	1	1	0

Approach	EB	WB	NB
Opposing Approach	WB	EB	
Opposing Lanes	1	1	0
Conflicting Approach Left		NB	EB
Conflicting Lanes Left	0	1	1
Conflicting Approach Right	NB		WB
Conflicting Lanes Right	1	0	1
HCM Control Delay	7.2	7.7	7.6
HCM LOS	A	A	A

Lane	NBLn1	EBLn1	WBLn1
Vol Left, %	48%	0%	67%
Vol Thru, %	0%	33%	33%
Vol Right, %	52%	67%	0%
Sign Control	Stop	Stop	Stop
Traffic Vol by Lane	105	75	45
LT Vol	50	0	30
Through Vol	0	25	15
RT Vol	55	50	0
Lane Flow Rate	119	85	51
Geometry Grp	1	1	1
Degree of Util (X)	0.131	0.09	0.062
Departure Headway (Hd)	3.949	3.782	4.344
Convergence, Y/N	Yes	Yes	Yes
Cap	900	938	818
Service Time	2.008	1.846	2.406
HCM Lane V/C Ratio	0.132	0.091	0.062
HCM Control Delay	7.6	7.2	7.7
HCM Lane LOS	A	A	A
HCM 95th-tile Q	0.5	0.3	0.2

DRAFT

Intersection	
Int Delay, s/veh	1.6

Movement	EBL	EBT	EBR	WBL	WBT	WBR	NBL	NBT	NBR	SBL	SBT	SBR
Lane Configurations												
Traffic Vol, veh/h	15	0	5	10	0	15	5	195	10	15	120	15
Future Vol, veh/h	15	0	5	10	0	15	5	195	10	15	120	15
Conflicting Peds, #/hr	0	0	0	0	0	0	0	0	0	0	0	0
Sign Control	Stop	Stop	Stop	Stop	Stop	Stop	Free	Free	Free	Free	Free	Free
RT Channelized	-	-	None	-	-	None	-	-	None	-	-	None
Storage Length	-	-	-	-	-	-	-	-	-	-	-	-
Veh in Median Storage, #	-	0	-	-	0	-	-	0	-	-	0	-
Grade, %	-	0	-	-	0	-	-	0	-	-	0	-
Peak Hour Factor	92	92	92	92	92	92	92	92	92	92	92	92
Heavy Vehicles, %	2	2	2	2	2	2	2	2	2	2	2	2
Mvmt Flow	16	0	5	11	0	16	5	212	11	16	130	16

Major/Minor	Minor2			Minor1			Major1			Major2		
Conflicting Flow All	406	403	138	401	406	218	146	0	0	223	0	0
Stage 1	170	170	-	228	228	-	-	-	-	-	-	-
Stage 2	236	233	-	173	178	-	-	-	-	-	-	-
Critical Hdwy	7.12	6.52	6.22	7.12	6.52	6.22	4.12	-	-	4.12	-	-
Critical Hdwy Stg 1	6.12	5.52	-	6.12	5.52	-	-	-	-	-	-	-
Critical Hdwy Stg 2	6.12	5.52	-	6.12	5.52	-	-	-	-	-	-	-
Follow-up Hdwy	3.518	4.018	3.318	3.518	4.018	3.318	2.218	-	-	2.218	-	-
Pot Cap-1 Maneuver	555	536	910	560	534	822	1436	-	-	1346	-	-
Stage 1	832	758	-	775	715	-	-	-	-	-	-	-
Stage 2	767	712	-	829	752	-	-	-	-	-	-	-
Platoon blocked, %								-	-		-	-
Mov Cap-1 Maneuver	537	527	910	549	525	822	1436	-	-	1346	-	-
Mov Cap-2 Maneuver	537	527	-	549	525	-	-	-	-	-	-	-
Stage 1	829	748	-	772	712	-	-	-	-	-	-	-
Stage 2	749	709	-	813	742	-	-	-	-	-	-	-

Approach	EB	WB	NB	SB
HCM Control Delay, s	11.2	10.5	0.2	0.8
HCM LOS	B	B		

Minor Lane/Major Mvmt	NBL	NBT	NBR	EBLn1	WBLn1	SBL	SBT	SBR
Capacity (veh/h)	1436	-	-	598	686	1346	-	-
HCM Lane V/C Ratio	0.004	-	-	0.036	0.04	0.012	-	-
HCM Control Delay (s)	7.5	0	-	11.2	10.5	7.7	0	-
HCM Lane LOS	A	A	-	B	B	A	A	-
HCM 95th %tile Q(veh)	0	-	-	0.1	0.1	0	-	-

DRAFT

Intersection	
Int Delay, s/veh	1.6

Movement	EBL	EBT	EBR	WBL	WBT	WBR	NBL	NBT	NBR	SBL	SBT	SBR
Lane Configurations												
Traffic Vol, veh/h	1	0	3	25	0	10	5	95	15	5	135	1
Future Vol, veh/h	1	0	3	25	0	10	5	95	15	5	135	1
Conflicting Peds, #/hr	0	0	0	0	0	0	0	0	0	0	0	0
Sign Control	Stop	Stop	Stop	Stop	Stop	Stop	Free	Free	Free	Free	Free	Free
RT Channelized	-	-	None	-	-	None	-	-	None	-	-	None
Storage Length	-	-	-	-	-	-	-	-	-	-	-	-
Veh in Median Storage, #	-	0	-	-	0	-	-	0	-	-	0	-
Grade, %	-	0	-	-	0	-	-	0	-	-	0	-
Peak Hour Factor	88	88	88	88	88	88	88	88	88	88	88	88
Heavy Vehicles, %	2	2	2	2	2	2	2	2	2	2	2	2
Mvmt Flow	1	0	3	28	0	11	6	108	17	6	153	1

Major/Minor	Minor2			Minor1			Major1			Major2		
Conflicting Flow All	300	303	154	296	295	117	154	0	0	125	0	0
Stage 1	166	166	-	129	129	-	-	-	-	-	-	-
Stage 2	134	137	-	167	166	-	-	-	-	-	-	-
Critical Hdwy	7.12	6.52	6.22	7.12	6.52	6.22	4.12	-	-	4.12	-	-
Critical Hdwy Stg 1	6.12	5.52	-	6.12	5.52	-	-	-	-	-	-	-
Critical Hdwy Stg 2	6.12	5.52	-	6.12	5.52	-	-	-	-	-	-	-
Follow-up Hdwy	3.518	4.018	3.318	3.518	4.018	3.318	2.218	-	-	2.218	-	-
Pot Cap-1 Maneuver	652	610	892	656	616	935	1426	-	-	1462	-	-
Stage 1	836	761	-	875	789	-	-	-	-	-	-	-
Stage 2	869	783	-	835	761	-	-	-	-	-	-	-
Platoon blocked, %								-	-		-	-
Mov Cap-1 Maneuver	640	605	892	649	610	935	1426	-	-	1462	-	-
Mov Cap-2 Maneuver	640	605	-	649	610	-	-	-	-	-	-	-
Stage 1	832	758	-	871	785	-	-	-	-	-	-	-
Stage 2	854	779	-	828	758	-	-	-	-	-	-	-

Approach	EB	WB	NB	SB
HCM Control Delay, s	9.5	10.4	0.3	0.3
HCM LOS	A	B		

Minor Lane/Major Mvmt	NBL	NBT	NBR	EBLn1	WBLn1	SBL	SBT	SBR
Capacity (veh/h)	1426	-	-	812	711	1462	-	-
HCM Lane V/C Ratio	0.004	-	-	0.006	0.056	0.004	-	-
HCM Control Delay (s)	7.5	0	-	9.5	10.4	7.5	0	-
HCM Lane LOS	A	A	-	A	B	A	A	-
HCM 95th %tile Q(veh)	0	-	-	0	0.2	0	-	-

DRAFT

Intersection	
Intersection Delay, s/veh	7.8
Intersection LOS	A

Movement	EBT	EBR	WBL	WBT	NBL	NBR
Lane Configurations						
Traffic Vol, veh/h	10	90	50	25	80	25
Future Vol, veh/h	10	90	50	25	80	25
Peak Hour Factor	0.88	0.88	0.88	0.88	0.88	0.88
Heavy Vehicles, %	2	2	2	2	2	2
Mvmt Flow	11	102	57	28	91	28
Number of Lanes	1	0	0	1	1	0

Approach	EB	WB	NB
Opposing Approach	WB	EB	
Opposing Lanes	1	1	0
Conflicting Approach Left		NB	EB
Conflicting Lanes Left	0	1	1
Conflicting Approach Right	NB		WB
Conflicting Lanes Right	1	0	1
HCM Control Delay	7.3	8	8.1
HCM LOS	A	A	A

Lane	NBLn1	EBLn1	WBLn1
Vol Left, %	76%	0%	67%
Vol Thru, %	0%	10%	33%
Vol Right, %	24%	90%	0%
Sign Control	Stop	Stop	Stop
Traffic Vol by Lane	105	100	75
LT Vol	80	0	50
Through Vol	0	10	25
RT Vol	25	90	0
Lane Flow Rate	119	114	85
Geometry Grp	1	1	1
Degree of Util (X)	0.142	0.116	0.103
Departure Headway (Hd)	4.284	3.668	4.366
Convergence, Y/N	Yes	Yes	Yes
Cap	827	958	810
Service Time	2.363	1.764	2.452
HCM Lane V/C Ratio	0.144	0.119	0.105
HCM Control Delay	8.1	7.3	8
HCM Lane LOS	A	A	A
HCM 95th-tile Q	0.5	0.4	0.3

DRAFT

Intersection	
Int Delay, s/veh	0.9

Movement	EBL	EBT	EBR	WBL	WBT	WBR	NBL	NBT	NBR	SBL	SBT	SBR
Lane Configurations												
Traffic Vol, veh/h	10	0	10	5	0	10	10	320	5	15	350	15
Future Vol, veh/h	10	0	10	5	0	10	10	320	5	15	350	15
Conflicting Peds, #/hr	0	0	0	0	0	0	0	0	0	0	0	0
Sign Control	Stop	Stop	Stop	Stop	Stop	Stop	Free	Free	Free	Free	Free	Free
RT Channelized	-	-	None	-	-	None	-	-	None	-	-	None
Storage Length	-	-	-	-	-	-	-	-	-	-	-	-
Veh in Median Storage, #	-	0	-	-	0	-	-	0	-	-	0	-
Grade, %	-	0	-	-	0	-	-	0	-	-	0	-
Peak Hour Factor	88	88	88	88	88	88	88	88	88	88	88	88
Heavy Vehicles, %	2	2	2	2	2	2	2	2	2	2	2	2
Mvmt Flow	11	0	11	6	0	11	11	364	6	17	398	17

Major/Minor	Minor2			Minor1			Major1			Major2		
Conflicting Flow All	836	833	407	835	838	367	415	0	0	370	0	0
Stage 1	441	441	-	389	389	-	-	-	-	-	-	-
Stage 2	395	392	-	446	449	-	-	-	-	-	-	-
Critical Hdwy	7.12	6.52	6.22	7.12	6.52	6.22	4.12	-	-	4.12	-	-
Critical Hdwy Stg 1	6.12	5.52	-	6.12	5.52	-	-	-	-	-	-	-
Critical Hdwy Stg 2	6.12	5.52	-	6.12	5.52	-	-	-	-	-	-	-
Follow-up Hdwy	3.518	4.018	3.318	3.518	4.018	3.318	2.218	-	-	2.218	-	-
Pot Cap-1 Maneuver	287	304	644	287	302	678	1144	-	-	1189	-	-
Stage 1	595	577	-	635	608	-	-	-	-	-	-	-
Stage 2	630	606	-	591	572	-	-	-	-	-	-	-
Platoon blocked, %								-	-		-	-
Mov Cap-1 Maneuver	276	295	644	275	293	678	1144	-	-	1189	-	-
Mov Cap-2 Maneuver	276	295	-	275	293	-	-	-	-	-	-	-
Stage 1	588	566	-	627	601	-	-	-	-	-	-	-
Stage 2	612	599	-	570	561	-	-	-	-	-	-	-

Approach	EB	WB	NB	SB
HCM Control Delay, s	14.9	13.2	0.2	0.3
HCM LOS	B	B		

Minor Lane/Major Mvmt	NBL	NBT	NBR	EBLn1	WBLn1	SBL	SBT	SBR
Capacity (veh/h)	1144	-	-	386	455	1189	-	-
HCM Lane V/C Ratio	0.01	-	-	0.059	0.037	0.014	-	-
HCM Control Delay (s)	8.2	0	-	14.9	13.2	8.1	0	-
HCM Lane LOS	A	A	-	B	B	A	A	-
HCM 95th %tile Q(veh)	0	-	-	0.2	0.1	0	-	-

DRAFT

Intersection	
Int Delay, s/veh	6.6

Movement	EBL	EBT	EBR	WBL	WBT	WBR	NBL	NBT	NBR	SBL	SBT	SBR
Lane Configurations												
Traffic Vol, veh/h	18	3	168	15	4	5	180	95	25	10	59	28
Future Vol, veh/h	18	3	168	15	4	5	180	95	25	10	59	28
Conflicting Peds, #/hr	0	0	0	0	0	0	0	0	0	0	0	0
Sign Control	Stop	Stop	Stop	Stop	Stop	Stop	Free	Free	Free	Free	Free	Free
RT Channelized	-	-	None	-	-	None	-	-	None	-	-	None
Storage Length	-	-	-	-	-	-	75	-	-	75	-	-
Veh in Median Storage, #	-	0	-	-	0	-	-	0	-	-	0	-
Grade, %	-	0	-	-	0	-	-	0	-	-	0	-
Peak Hour Factor	88	88	88	88	88	88	88	88	88	88	88	88
Heavy Vehicles, %	2	2	2	2	2	2	2	2	2	2	2	2
Mvmt Flow	20	3	191	17	5	6	205	108	28	11	67	32

Major/Minor	Minor2			Minor1			Major1			Major2		
Conflicting Flow All	643	651	83	734	653	122	99	0	0	136	0	0
Stage 1	105	105	-	532	532	-	-	-	-	-	-	-
Stage 2	538	546	-	202	121	-	-	-	-	-	-	-
Critical Hdwy	7.12	6.52	6.22	7.12	6.52	6.22	4.12	-	-	4.12	-	-
Critical Hdwy Stg 1	6.12	5.52	-	6.12	5.52	-	-	-	-	-	-	-
Critical Hdwy Stg 2	6.12	5.52	-	6.12	5.52	-	-	-	-	-	-	-
Follow-up Hdwy	3.518	4.018	3.318	3.518	4.018	3.318	2.218	-	-	2.218	-	-
Pot Cap-1 Maneuver	386	388	976	336	387	929	1494	-	-	1448	-	-
Stage 1	901	808	-	531	526	-	-	-	-	-	-	-
Stage 2	527	518	-	800	796	-	-	-	-	-	-	-
Platoon blocked, %								-	-		-	-
Mov Cap-1 Maneuver	338	332	976	239	331	929	1494	-	-	1448	-	-
Mov Cap-2 Maneuver	338	332	-	239	331	-	-	-	-	-	-	-
Stage 1	778	802	-	458	454	-	-	-	-	-	-	-
Stage 2	447	447	-	636	790	-	-	-	-	-	-	-

Approach	EB	WB	NB	SB
HCM Control Delay, s	11.1	18.2	4.7	0.8
HCM LOS	B	C		

Minor Lane/Major Mvmt	NBL	NBT	NBR	EBLn1	WBLn1	SBL	SBT	SBR
Capacity (veh/h)	1494	-	-	806	299	1448	-	-
HCM Lane V/C Ratio	0.137	-	-	0.266	0.091	0.008	-	-
HCM Control Delay (s)	7.8	-	-	11.1	18.2	7.5	-	-
HCM Lane LOS	A	-	-	B	C	A	-	-
HCM 95th %tile Q(veh)	0.5	-	-	1.1	0.3	0	-	-

DRAFT

Intersection	
Intersection Delay, s/veh	7.6
Intersection LOS	A

Movement	EBT	EBR	WBL	WBT	NBL	NBR
Lane Configurations						
Traffic Vol, veh/h	25	59	37	15	57	60
Future Vol, veh/h	25	59	37	15	57	60
Peak Hour Factor	0.88	0.88	0.88	0.88	0.88	0.88
Heavy Vehicles, %	2	2	2	2	2	2
Mvmt Flow	28	67	42	17	65	68
Number of Lanes	1	0	0	1	1	0

Approach	EB	WB	NB
Opposing Approach	WB	EB	
Opposing Lanes	1	1	0
Conflicting Approach Left		NB	EB
Conflicting Lanes Left	0	1	1
Conflicting Approach Right	NB		WB
Conflicting Lanes Right	1	0	1
HCM Control Delay	7.3	7.8	7.8
HCM LOS	A	A	A

Lane	NBLn1	EBLn1	WBLn1
Vol Left, %	49%	0%	71%
Vol Thru, %	0%	30%	29%
Vol Right, %	51%	70%	0%
Sign Control	Stop	Stop	Stop
Traffic Vol by Lane	117	84	52
LT Vol	57	0	37
Through Vol	0	25	15
RT Vol	60	59	0
Lane Flow Rate	133	95	59
Geometry Grp	1	1	1
Degree of Util (X)	0.147	0.101	0.072
Departure Headway (Hd)	3.99	3.791	4.385
Convergence, Y/N	Yes	Yes	Yes
Cap	889	933	808
Service Time	2.056	1.866	2.457
HCM Lane V/C Ratio	0.15	0.102	0.073
HCM Control Delay	7.8	7.3	7.8
HCM Lane LOS	A	A	A
HCM 95th-tile Q	0.5	0.3	0.2

DRAFT

Intersection	
Int Delay, s/veh	1.5

Movement	EBL	EBT	EBR	WBL	WBT	WBR	NBL	NBT	NBR	SBL	SBT	SBR
Lane Configurations												
Traffic Vol, veh/h	18	0	5	10	0	19	5	273	10	18	183	17
Future Vol, veh/h	18	0	5	10	0	19	5	273	10	18	183	17
Conflicting Peds, #/hr	0	0	0	0	0	0	0	0	0	0	0	0
Sign Control	Stop	Stop	Stop	Stop	Stop	Stop	Free	Free	Free	Free	Free	Free
RT Channelized	-	-	None	-	-	None	-	-	None	-	-	None
Storage Length	-	-	-	-	-	-	-	-	-	-	-	-
Veh in Median Storage, #	-	0	-	-	0	-	-	0	-	-	0	-
Grade, %	-	0	-	-	0	-	-	0	-	-	0	-
Peak Hour Factor	92	92	92	92	92	92	92	92	92	92	92	92
Heavy Vehicles, %	2	2	2	2	2	2	2	2	2	2	2	2
Mvmt Flow	20	0	5	11	0	21	5	297	11	20	199	18

Major/Minor	Minor2			Minor1			Major1			Major2		
Conflicting Flow All	571	566	208	564	570	303	217	0	0	308	0	0
Stage 1	248	248	-	313	313	-	-	-	-	-	-	-
Stage 2	323	318	-	251	257	-	-	-	-	-	-	-
Critical Hdwy	7.12	6.52	6.22	7.12	6.52	6.22	4.12	-	-	4.12	-	-
Critical Hdwy Stg 1	6.12	5.52	-	6.12	5.52	-	-	-	-	-	-	-
Critical Hdwy Stg 2	6.12	5.52	-	6.12	5.52	-	-	-	-	-	-	-
Follow-up Hdwy	3.518	4.018	3.318	3.518	4.018	3.318	2.218	-	-	2.218	-	-
Pot Cap-1 Maneuver	432	434	832	436	431	737	1353	-	-	1253	-	-
Stage 1	756	701	-	698	657	-	-	-	-	-	-	-
Stage 2	689	654	-	753	695	-	-	-	-	-	-	-
Platoon blocked, %								-	-		-	-
Mov Cap-1 Maneuver	413	424	832	426	422	737	1353	-	-	1253	-	-
Mov Cap-2 Maneuver	413	424	-	426	422	-	-	-	-	-	-	-
Stage 1	753	688	-	695	654	-	-	-	-	-	-	-
Stage 2	667	651	-	735	682	-	-	-	-	-	-	-

Approach	EB	WB	NB	SB
HCM Control Delay, s	13.2	11.5	0.1	0.7
HCM LOS	B	B		

Minor Lane/Major Mvmt	NBL	NBT	NBR	EBLn1	WBLn1	SBL	SBT	SBR
Capacity (veh/h)	1353	-	-	464	589	1253	-	-
HCM Lane V/C Ratio	0.004	-	-	0.054	0.054	0.016	-	-
HCM Control Delay (s)	7.7	0	-	13.2	11.5	7.9	0	-
HCM Lane LOS	A	A	-	B	B	A	A	-
HCM 95th %tile Q(veh)	0	-	-	0.2	0.2	0	-	-

DRAFT

Intersection	
Int Delay, s/veh	7.8

Movement	EBL	EBT	EBR	WBL	WBT	WBR	NBL	NBT	NBR	SBL	SBT	SBR
Lane Configurations												
Traffic Vol, veh/h	28	4	194	25	4	10	207	85	15	5	128	26
Future Vol, veh/h	28	4	194	25	4	10	207	85	15	5	128	26
Conflicting Peds, #/hr	0	0	0	0	0	0	0	0	0	0	0	0
Sign Control	Stop	Stop	Stop	Stop	Stop	Stop	Free	Free	Free	Free	Free	Free
RT Channelized	-	-	None	-	-	None	-	-	None	-	-	None
Storage Length	-	-	-	-	-	-	75	-	-	75	-	-
Veh in Median Storage, #	-	0	-	-	0	-	-	0	-	-	0	-
Grade, %	-	0	-	-	0	-	-	0	-	-	0	-
Peak Hour Factor	88	88	88	88	88	88	88	88	88	88	88	88
Heavy Vehicles, %	2	2	2	2	2	2	2	2	2	2	2	2
Mvmt Flow	32	5	220	28	5	11	235	97	17	6	145	30

Major/Minor	Minor2			Minor1			Major1			Major2		
Conflicting Flow All	756	756	160	861	763	106	175	0	0	114	0	0
Stage 1	172	172	-	576	576	-	-	-	-	-	-	-
Stage 2	584	584	-	285	187	-	-	-	-	-	-	-
Critical Hdwy	7.12	6.52	6.22	7.12	6.52	6.22	4.12	-	-	4.12	-	-
Critical Hdwy Stg 1	6.12	5.52	-	6.12	5.52	-	-	-	-	-	-	-
Critical Hdwy Stg 2	6.12	5.52	-	6.12	5.52	-	-	-	-	-	-	-
Follow-up Hdwy	3.518	4.018	3.318	3.518	4.018	3.318	2.218	-	-	2.218	-	-
Pot Cap-1 Maneuver	325	337	885	276	334	948	1401	-	-	1475	-	-
Stage 1	830	756	-	503	502	-	-	-	-	-	-	-
Stage 2	498	498	-	722	745	-	-	-	-	-	-	-
Platoon blocked, %								-	-		-	-
Mov Cap-1 Maneuver	276	279	885	178	277	948	1401	-	-	1475	-	-
Mov Cap-2 Maneuver	276	279	-	178	277	-	-	-	-	-	-	-
Stage 1	691	753	-	418	418	-	-	-	-	-	-	-
Stage 2	405	414	-	537	742	-	-	-	-	-	-	-

Approach	EB	WB	NB	SB
HCM Control Delay, s	13.6	23.7	5.5	0.2
HCM LOS	B	C		

Minor Lane/Major Mvmt	NBL	NBT	NBR	EBLn1	WBLn1	SBL	SBT	SBR
Capacity (veh/h)	1401	-	-	675	236	1475	-	-
HCM Lane V/C Ratio	0.168	-	-	0.38	0.188	0.004	-	-
HCM Control Delay (s)	8.1	-	-	13.6	23.7	7.5	-	-
HCM Lane LOS	A	-	-	B	C	A	-	-
HCM 95th %tile Q(veh)	0.6	-	-	1.8	0.7	0	-	-

DRAFT

Intersection	
Intersection Delay, s/veh	7.9
Intersection LOS	A

Movement	EBT	EBR	WBL	WBT	NBL	NBR
Lane Configurations						
Traffic Vol, veh/h	10	100	58	25	90	32
Future Vol, veh/h	10	100	58	25	90	32
Peak Hour Factor	0.88	0.88	0.88	0.88	0.88	0.88
Heavy Vehicles, %	2	2	2	2	2	2
Mvmt Flow	11	114	66	28	102	36
Number of Lanes	1	0	0	1	1	0

Approach	EB	WB	NB
Opposing Approach	WB	EB	
Opposing Lanes	1	1	0
Conflicting Approach Left		NB	EB
Conflicting Lanes Left	0	1	1
Conflicting Approach Right	NB		WB
Conflicting Lanes Right	1	0	1
HCM Control Delay	7.4	8.1	8.3
HCM LOS	A	A	A

Lane	NBLn1	EBLn1	WBLn1
Vol Left, %	74%	0%	70%
Vol Thru, %	0%	9%	30%
Vol Right, %	26%	91%	0%
Sign Control	Stop	Stop	Stop
Traffic Vol by Lane	122	110	83
LT Vol	90	0	58
Through Vol	0	10	25
RT Vol	32	100	0
Lane Flow Rate	139	125	94
Geometry Grp	1	1	1
Degree of Util (X)	0.17	0.133	0.118
Departure Headway (Hd)	4.404	3.819	4.518
Convergence, Y/N	Yes	Yes	Yes
Cap	819	943	796
Service Time	2.404	1.828	2.53
HCM Lane V/C Ratio	0.17	0.133	0.118
HCM Control Delay	8.3	7.4	8.1
HCM Lane LOS	A	A	A
HCM 95th-tile Q	0.6	0.5	0.4

DRAFT

Intersection	
Int Delay, s/veh	1

Movement	EBL	EBT	EBR	WBL	WBT	WBR	NBL	NBT	NBR	SBL	SBT	SBR
Lane Configurations												
Traffic Vol, veh/h	13	0	10	5	0	14	10	409	5	19	433	18
Future Vol, veh/h	13	0	10	5	0	14	10	409	5	19	433	18
Conflicting Peds, #/hr	0	0	0	0	0	0	0	0	0	0	0	0
Sign Control	Stop	Stop	Stop	Stop	Stop	Stop	Free	Free	Free	Free	Free	Free
RT Channelized	-	-	None	-	-	None	-	-	None	-	-	None
Storage Length	-	-	-	-	-	-	-	-	-	-	-	-
Veh in Median Storage, #	-	0	-	-	0	-	-	0	-	-	0	-
Grade, %	-	0	-	-	0	-	-	0	-	-	0	-
Peak Hour Factor	88	88	88	88	88	88	88	88	88	88	88	88
Heavy Vehicles, %	2	2	2	2	2	2	2	2	2	2	2	2
Mvmt Flow	15	0	11	6	0	16	11	465	6	22	492	20

Major/Minor	Minor2			Minor1			Major1			Major2		
Conflicting Flow All	1044	1039	502	1042	1046	468	512	0	0	471	0	0
Stage 1	546	546	-	490	490	-	-	-	-	-	-	-
Stage 2	498	493	-	552	556	-	-	-	-	-	-	-
Critical Hdwy	7.12	6.52	6.22	7.12	6.52	6.22	4.12	-	-	4.12	-	-
Critical Hdwy Stg 1	6.12	5.52	-	6.12	5.52	-	-	-	-	-	-	-
Critical Hdwy Stg 2	6.12	5.52	-	6.12	5.52	-	-	-	-	-	-	-
Follow-up Hdwy	3.518	4.018	3.318	3.518	4.018	3.318	2.218	-	-	2.218	-	-
Pot Cap-1 Maneuver	207	231	569	208	228	595	1053	-	-	1091	-	-
Stage 1	522	518	-	560	549	-	-	-	-	-	-	-
Stage 2	554	547	-	518	513	-	-	-	-	-	-	-
Platoon blocked, %								-	-		-	-
Mov Cap-1 Maneuver	195	221	569	197	218	595	1053	-	-	1091	-	-
Mov Cap-2 Maneuver	195	221	-	197	218	-	-	-	-	-	-	-
Stage 1	515	503	-	552	541	-	-	-	-	-	-	-
Stage 2	532	539	-	493	499	-	-	-	-	-	-	-

Approach	EB	WB	NB	SB
HCM Control Delay, s	19.6	14.8	0.2	0.3
HCM LOS	C	B		

Minor Lane/Major Mvmt	NBL	NBT	NBR	EBLn1	WBLn1	SBL	SBT	SBR
Capacity (veh/h)	1053	-	-	273	388	1091	-	-
HCM Lane V/C Ratio	0.011	-	-	0.096	0.056	0.02	-	-
HCM Control Delay (s)	8.5	0	-	19.6	14.8	8.4	0	-
HCM Lane LOS	A	A	-	C	B	A	A	-
HCM 95th %tile Q(veh)	0	-	-	0.3	0.2	0.1	-	-

DRAFT

MARKET STREET BUSINESS PARK - FINAL PLAT

Part of the Northwest 1/4 of Section 26,
Township 2 North, Range 64 West of the 6th P.M.,
Town of Keenesburg, County of Weld, State of Colorado.

Sheet 1 of 1

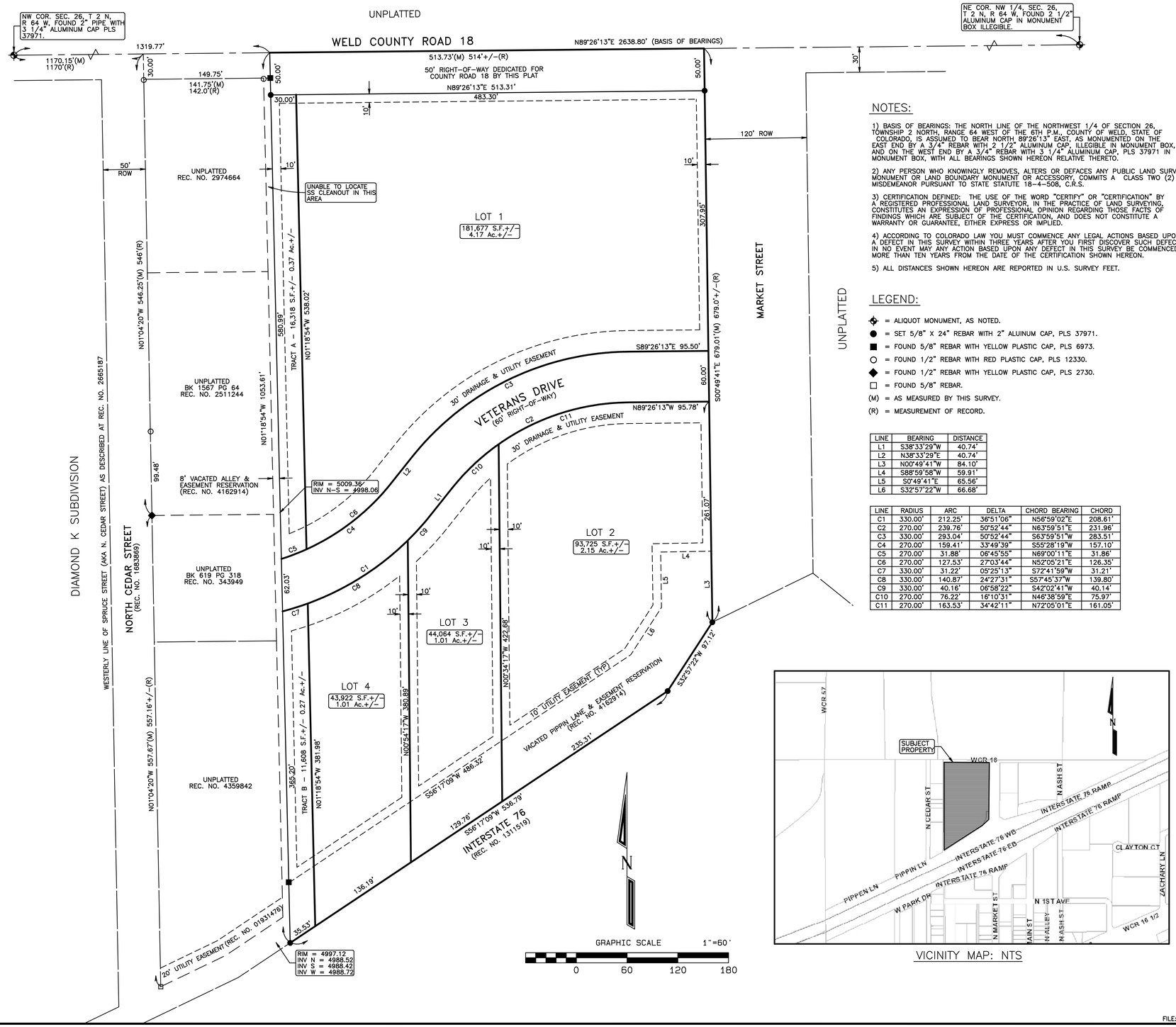

NOTES:

1) BASIS OF BEARINGS: THE NORTH LINE OF THE NORTHWEST 1/4 OF SECTION 26, TOWNSHIP 2 NORTH, RANGE 64 WEST OF THE 6TH P.M., COUNTY OF WELD, STATE OF COLORADO, IS ASSUMED TO BEAR NORTH 89°26'13" EAST, AS MONUMENTED ON THE EAST END BY A 3/4" REBAR WITH 2 1/2" ALUMINUM CAP, ILLEGIBLE IN MONUMENT BOX, AND ON THE WEST END BY A 3/4" REBAR WITH 3 1/4" ALUMINUM CAP, PLS 37971 IN MONUMENT BOX, WITH ALL BEARINGS SHOWN HEREON RELATIVE THERETO.

2) ANY PERSON WHO KNOWINGLY REMOVES, ALTERS OR DEFACES ANY PUBLIC LAND SURVEY MONUMENT OR LAND BOUNDARY MONUMENT OR ACCESSORY, COMMITS A CLASS TWO (2) MISDEMEANOR PURSUANT TO STATE STATUTE 18-4-508, C.R.S.

3) CERTIFICATION DEFINED: THE USE OF THE WORD "CERTIFY" OR "CERTIFICATION" BY A REGISTERED PROFESSIONAL LAND SURVEYOR, IN THE PRACTICE OF LAND SURVEYING, CONSTITUTES AN EXPRESSION OF PROFESSIONAL OPINION REGARDING THOSE FACTS OF FINDINGS WHICH ARE SUBJECT OF THE CERTIFICATION, AND DOES NOT CONSTITUTE A WARRANTY OR GUARANTEE, EITHER EXPRESS OR IMPLIED.

4) ACCORDING TO COLORADO LAW YOU MUST COMMENCE ANY LEGAL ACTIONS BASED UPON A DEFECT IN THIS SURVEY WITHIN THREE YEARS AFTER YOU FIRST DISCOVER SUCH DEFECT. IN NO EVENT MAY ANY ACTION BASED UPON ANY DEFECT IN THIS SURVEY BE COMMENCED MORE THAN TEN YEARS FROM THE DATE OF THE CERTIFICATION SHOWN HEREON.

5) ALL DISTANCES SHOWN HEREON ARE REPORTED IN U.S. SURVEY FEET.

LEGEND:

✜ = ALIQUOT MONUMENT, AS NOTED.
● = SET 5/8" X 24" REBAR WITH 2" ALUINUM CAP, PLS 37971.
■ = FOUND 5/8" REBAR WITH YELLOW PLASTIC CAP, PLS 6973.
○ = FOUND 1/2" REBAR WITH RED PLASTIC CAP, PLS 12330.
◆ = FOUND 1/2" REBAR WITH YELLOW PLASTIC CAP, PLS 2730.
□ = FOUND 5/8" REBAR.
(M) = AS MEASURED BY THIS SURVEY.
(R) = MEASUREMENT OF RECORD.

LINE	BEARING	DISTANCE
L1	S38°33'29"W	40.74'
L2	N38°33'29"E	40.74'
L3	N00°49'41"W	84.10'
L4	S88°59'58"W	59.91'
L5	S0°49'41"E	65.56'
L6	S32°57'22"W	66.68'

LINE	RADIUS	ARC	DELTA	CHORD BEARING	CHORD
C1	330.00'	212.25'	36°51'06"	N56°59'02"E	208.61'
C2	270.00'	239.76'	50°52'44"	N63°59'51"E	231.96'
C3	330.00'	293.04'	50°52'44"	S63°59'51"W	283.51'
C4	270.00'	159.41'	33°49'39"	S55°28'19"W	157.10'
C5	270.00'	31.88'	06°45'55"	N69°00'11"E	31.86'
C6	270.00'	127.53'	27°03'44"	N52°05'21"E	126.35'
C7	330.00'	31.22'	05°25'13"	S72°41'59"W	31.21'
C8	330.00'	140.87'	24°27'31"	S57°45'37"W	139.80'
C9	330.00'	40.16'	06°58'22"	S42°02'41"W	40.14'
C10	270.00'	76.22'	16°10'31"	N46°38'59"E	75.97'
C11	270.00'	163.53'	34°42'11"	N72°05'01"E	161.05'

VICINITY MAP: NTS

OWNER'S CERTIFICATE AND DEDICATION:

KNOW ALL MEN BY THESE PRESENTS THAT THE UNDERSIGNED BEING THE SOLE OWNERS OF THAT PART OF THE NORTHWEST 1/4 OF SECTION 26, TOWNSHIP 2 NORTH, RANGE 64 WESTOF THE 6TH P.M., TOWN OF KEENESBURG, COUNTY OF WELD, STATE OF COLORADO, BEING MORE PARTICULARLY DESCRIBED AS FOLLOWS:

CONSIDERING THE NORTH LINE OF THE NORTHWEST 1/4 OF SAID SECTION 26 TO BEAR NORTH 89°26'13" EAST AND WITH ALL BEARINGS CONTAINED HEREIN RELATIVE THERETO;

COMMENCING AT THE NORTHWEST CORNER OF SAID SECTION 26; THENCE NORTH 89°26'13" EAST, COINCIDENT WITH THE NORTH LINE OF THE NORTHWEST 1/4 OF SAID SECTION 26, A DISTANCE OF 1319.77 FEET TO THE TRUE POINT OF BEGINNING; THENCE CONTINUING NORTH 89°26'13" EAST, COINCIDENT WITH SAID NORTH LINE, A DISTANCE OF 513.73 FEET TO THE NORTHERLY EXTENSION OF THE WEST RIGHT-OF-WAY LINE OF MARKET STREET; THENCE SOUTH 00°49'41" EAST, COINCIDENT WITH SAID WEST RIGHT-OF-WAY LINE AND THE NORTHERLY EXTENSION THEREOF, A DISTANCE OF 679.01 FEET TO THE NORTH RIGHT-OF-WAY LINE OF INTERSTATE 76 AS DESCRIBED IN DEED RECORDED AUGUST 27, 1959 AS RECEPTION NO. 1311519 IN THE RECORDS OF THE CLERK AND RECORDER FOR WELD COUNTY, COLORADO; THENCE SOUTH SOUTH 32°57'22" WEST, COINCIDENT WITH SAID NORTH RIGHT-OF-WAY LINE, A DISTANCE OF 97.12 FEET; THENCE SOUTH 56°17'09" WEST, COINCIDENT WITH SAID NORTH RIGHT-FO-WAY LINE, A DISTANCE OF 536.79 FEET TO THE SOUTHWEST CORNER OF THAT PARCEL OF LAND DESCRIBED IN DEED RECORDED MAY 23, 1960 AS RECEPTION NO. 1330524 IN THE RECORDS OF THE CLERK AND RECORDER FOR WELD COUNTY, COLORADO; THENCE NORTH 01°18'54" WEST, COINCIDENT WITH THE WEST LINE OF SAID PARCEL AND THE EAST LINE OF A VACATED ALLEY AS DESCRIBED IN ORDINANCE NO. 2007-1 RECORDED DECEMBER 4, 2015 AS RECEPTION NO. 4162914 IN THE RECORDS OF THE CLERK AND RECORDER FOR WELD COUNTY, COLORADO, AND AS SHOWN ON VACATION PLAT RECORDED MARCH 21, 2007 AS RECEPTION NO. 3463507 IN THE RECORDS OF THE CLERK AND RECORDER FOR WELD COUNTY, COLORADO, A DISTANCE OF 1053.61 FEET TO THE NORTH LINE OF THE NORTHWEST 1/4 OF SAID SECTION 26 AND THE TRUE POINT OF BEGINNING.

SAID PARCEL CONTAINS 452,308 SQUARE FEET OR 10.38 ACRES, MORE OR LESS.

HAVE BY THESE PRESENTS, LAID OUT, PLATTED AND SUBDIVIDED THE SAME INTO LOTS AS SHOWN ON THIS PLAT, UNDER THE NAME AND STYLE OF "MARKET STREET BUSINESS CENTER" AND DO HEREBY DEDICATE TO THE PUBLIC ALL WAYS AND OTHER PUBLIC RIGHTS-OF-WAY AND EASEMENTS FOR THE PURPOSES SHOWN HEREON.

EXECUTED THIS_____ DAY OF_____, 20_____.

FOR AND ON BEHALF OF: KEENE LAND HOLDINGS, LLC. A COLORADO LIMITED LIABILITY COMPANY

_____
RICHARD L. ROBERTSON AS MANAGER

THE FOREGOING CERTIFICATION WAS ACKNOWLEDGED BEFORE ME

BY: RICHARD L. ROBERTSON AS MANAGER OF
KEENE LAND HOLDINGS, LLC, A COLORADO LIMITED LIABILITY COMPANY

THIS_____DAY OF _____, A.D., 20_____.

COUNTY OF _____) SS
STATE OF _____)

MY COMMISSION EXPIRES: _____

NOTARY PUBLIC

_____
WITNESS MY HAND AND SEAL

PLANNING COMMISSION APPROVAL:

THIS PLAT IS APPROVED BY THE TOWN OF KEENESBURG PLANNING COMMISSION

THIS_____DAY OF_____, 20_____.

_____
CHAIRPERSON:

TOWN BOARD APPROVAL:

APPROVED BY THE TOWN BOARD OF KEENESBURG, COLORADO

THIS_____DAY OF_____, 20_____.

_____
MAYOR:

ATTEST:_____
TOWN CLERK:

SURVEYOR'S STATEMENT:

I, CURTIS D. HOOS, A PROFESSIONAL LAND SURVEYOR IN THE STATE OF COLORADO, DO HEREBY CERTIFY THAT THE SURVEY REPRESENTED BY THIS PLAT WAS MADE BY ME OR UNDER MY DIRECT SUPERVISION, AND THIS PLAT ACCURATELY REPRESENTS SAID SURVEY TO THE BEST OF MY KNOWLEDGE AND BELIEF. THIS SURVEY DOES NOT CONSTITUTE A TITLE SEARCH BY ME TO DETERMINE OWNERSHIP.

CURTIS D. HOOS, PLS 37971
FOR AND ON BEHALF OF:
AMERICAN WEST LAND SURVEYING CO.
A COLORADO CORPORATION

American West
Land Surveying Co.
A Colorado Corporation
PO Box 129, Brighton, CO 80601 * P:303-659-1532 F:303-655-0575 * amwestls.com

SCALE 1" = 60'	DRAWN BY: CDH	CHECKED BY: MJH	DATE: AUG. 7, 2019
REVISIONS:			
JOB NO: 19-			

FILE: F:\SURVEYS\T1-2N\T2N_R64W\S26\MARKET STREET_SUB.pro

KEENESBURG PLANNING DEPARTMENT

DEVELOPMENT REVIEW REFERRAL

FROM: **TODD HODGES, TOWN PLANNER**

DATE: **OCTOBER 11, 2019**

PROJECT: **Market Place Subdivision Preliminary and Final Plan**

INTERNAL DISTRIBUTION:

_x__	City Engineer	_x__	City Attorney	__x__	City Clerk
_x__	Public Works Manager	_x__	Building Inspector		

OUTSIDE DISTRIBUTION:

_x__	SE Weld Fire Protection District	_X__	Weld County Department of Planning Services
_X__	CDOT	___	Army Corp of Engineers
_X__	Atmos Energy	___	Postmaster
_x__	United Power	___	Colorado Department of Natural Resources
___	Colorado Division of Wildlife	_X__	Weld County Public Works
_X__	Weld County School District RE-3	_X__	Century Link
___	Division of Water Resources	___	Town of Hudson

If you have comments, please respond by: **October 31, 2019**

Comments may be emailed to toddhodgesdesign@qwestoffice.net or mailed to the address below. A non-response to this referral may be considered a favorable response.

COMMENTS:

_____

_____

_____

PROFESSIONAL ENGINEERING CONSULTANTS, P.A.

October 31, 2019

Debra Chumley
Town of Keenesburg Manager
P.O. Box 312
140 S. Main Street
Keenesburg, CO 80643

RE: Market Street Business Park
Preliminary and Final Plat Submittal, Drainage Report and Construction Documents Comments

Dear Debra:

Professional Engineering Consultants (PEC) reviewed the Final Drainage Report and Construction Drawings (CDs) for the preliminary and final plat submittal for the Market St Business Park Subdivision. We have no concerns that would require significant project redesign and believe that our comments can be readily addressed by the applicant and its engineer.

Redline comments on the Final Drainage Report and the CDs are provided separately. The following are summary comments on the proposed improvements associated with the subdivision.

1. The Town of Keenesburg (Town) will make the cut in the existing 4" asbestos cement (AC) water line in the existing Pippin Lane.
2. Lot and tract labeling on the CDs should be consistent with the plat.
3. Construct the sidewalk and curb and gutter along CR18 and Market Street north of Veterans Drive at the full buildout location. In both cases, the street edge of the sidewalk is to be 51 feet from the ROW centerline, and the gutter flowline is to be 41 feet from the ROW centerline. In determining elevations, assume the road elevation at the ROW centerline is to remain.
4. Per the recommendation of the project's traffic study, a left turn lane into the project from northbound Market Street will be required. Please use the lane length and taper ratio recommended in the study.
5. The existing asphalt surface of Market Street is to be edge-milled and overlain with a new 2" layer of hot mix asphalt.
6. Any other potential future improvements to Market Street or CR18 will be dictated by whether significant changes in traffic volumes will result from specific proposed uses in comparison to traffic volumes computed by LSC Transportation Consultants (August 30, 2019). Potential future improvements will be the responsibility of the proposed Site Plan developer based on the results of the site-specific traffic studies.
7. The Town will expect one owner per lot. If multiple uses are anticipated on a lot, as shown for example for Lots 1 and 4, all proposed uses would need to have the same owner. No additional access points to Market Street or CR18 will be allowed due to intersection spacing criteria.
8. The Town would like to meet with the applicant and Western Engineering Consultants to discuss plans for water and sanitary sewer services.
9. Please shift the location of the sanitary main between Veterans Drive and SSMH#1 to the lot line between Lots 2 and 3. The alignment as proposed is located too close to the proposed landscape buffer for Tract B and we are concerned that potential future maintenance of the line would be affected by tree roots, and vice versa. It appears that SSMH#5 could be eliminated to offset the cost of the additional MH created by this re-route.

10. Install a cross rather than a tee for proposed waterline connections at Market Street/Veterans Drive and Market Street/CR18 to allow for future potential water line connections. An 8" C900 PVC pipe with MJ plug should be extended east across Market Street at Veterans Drive.
11. Proposed Fire Hydrants #1 and #2 should be located 2 feet from the street side of the project sidewalks along Market Street and CR18. Relocated Fire Hydrant C should be located very close to the location of the existing stop sign (to be removed) at Pippin Lane and Market Street.
12. The proposed extension south along Market Street from Veterans Drive to Fire Hydrant C should be an 8" C900 PVC pipe.
13. Proposed Fire Hydrants 4 and 5 should be relocated so that they will not be in conflict with the proposed accesses.
14. The proposed waterline in CR18 should be 10" C900 PVC pipe to connect to 10" pipe in N. Cedar Street.
15. The Town prefers sanitary sewer Concept #1 (Sheet C2.04) to extend sewer from the project to off-site. The Town will evaluate the potential for future extension and may require the proposed project sewer to be somewhat deeper, as slope criteria allow.
16. In design of the vertical profile of Veterans Drive, use a minimum K-value for sag conditions of 40, and a minimum K-value for crest conditions of 30.
17. If possible, locate Fire Hydrants 4 and 5 at high points in the road and water main profile.
18. Veterans Drive should be connected to N. Cedar Street with 20-foot radius curb returns, and a cross pan provided to promote curb and gutter drainage in N. Cedar Street. The curb return radius for Veterans Drive to Market Street should be 25 feet.
19. Show the locations of proposed storm water infrastructure in the road plan and profile sheets.
20. See the redline comments provided for the Final Drainage Report.
21. Does the existing 24" RCP at Market Street and the westbound I-76 on-ramp flow to the south? Refer to the profile of the pipe shown in the Storm Line D plan and profile on Sheet C4.03.
22. We need to see additional documentation in Appendix C of the Final Drainage Report for the proposed hydraulic structures (inlets, pipes, culverts and swales).
23. Please provide a pond grading detail so that contours surrounding and within the pond can be reviewed.

Please let me know if you have any questions.

Respectfully Submitted,

PROFESSIONAL ENGINEERING CONSULTANTS, PA

Kent Bruxvoort, P.E.
Town Engineer

cc: Todd Hodges, Town Planner

THDLLC

From: Hice-Idler - CDOT, Gloria <gloria.hice-idler@state.co.us>
Sent: Wednesday, October 30, 2019 9:50 AM
To: THDLLC
Cc: Bilobran, Timothy; Allyson Mattson - CDOT
Subject: Re: FW: Market Street Business Park - Traffic study

I agree with the recommendations made in the TIS. The applicant will need to obtain an access permit for this work.

Gloria Hice-Idler
Rocksol Consulting

(970) 381-8629

10601 W. 10th Street, Greeley, CO 80634
gloria.hice-idler@state.co.us | www.codot.gov | www.cotrip.org

On Mon, Oct 21, 2019 at 6:51 PM THDLLC <toddhodgesdesign@qwestoffice.net> wrote:

> Gloria,
>
> Let me know if you need additional info.
>
> Have a great week.
>
> Todd A. Hodges, Principal
>
> Todd Hodges Design, LLC
>
> 970-215-4311

From: chadwin.cox@westerneci.com <chadwin.cox@westerneci.com>
Sent: Monday, October 21, 2019 4:50 PM
To: 'Todd Hodges' <toddhodgesdesign@qwestoffice.net>
Cc: 'Debra Chumley' <tokmanager@rtebb.net>; 'Rick Robertson' <pri.rickrobertson@gmail.com>; 'Kent Bruxvoort' <kent.bruxvoort@pec1.com>
Subject: FW: Market Street Business Park - Traffic study

Evening Todd,

I got your VM from this morning. Please see Chris McGranahan's email I forwarded on August 30 – and attached to said email was the Traffic Study for Market Street. The email was a quick reply for timing on turn lanes that wasn't further discussed in the actual study.

I do not believe this was included in the original sharefile link since it wasn't received until 2 weeks after our submittal.

Please advise if you need anything further.

Thank you,

Chad

Chadwin F. Cox, PE

WESTERN ENGINEERING CONSULTANTS inc LLC

127 South Denver Avenue – Ft. Lupton, CO 80621

2501 Mill St - Brush, CO 80723

Ft. Lupton Office 720-685-9951

Brush Cell 303-913-7341

Fax 720-294-1330

email: chadwin.cox@westerneci.com

CONFIDENTIALITY, INDEMNITY, & DIGITAL/ELECTRONIC USE NOTICE: This electronic message transmission, and any attachments, is intended only for use by the recipient and may contain legally privileged and/or confidential information. If you are not the intended recipient of this e-mail, you are hereby notified that any dissemination, distribution or copying of this e-mail, and any attachments thereto, is strictly prohibited. The use of drawings, reports, and data in any electronic form furnished by Western Engineering consultants inc Llc (WEC) are instruments of service by WEC who shall be deemed author and retain all common and/or statuatory law and other rights including copyright. The recipient of this email agrees not to resuse any digitial/electronic files in whole or part for any purpose other than for the Project it was created. Further the recipient acknowledges differences may exist between the hard copy stamped and sealed plans compared to the digital/electronic information provided. Under al circumstances the hard-copy sealed and signed construction documents shall govern. Lastly the recipient agrees to the full extent permitted by law to indemnify and hold harmless WEC, its officers, directors, employees and subconsultants against all damages, liabilities or costs, including reasonable attorneys' fees and defense costs arising from any changes made by anyone other than WEC or from any reuse of the digital/electronic files withouth prior written consent of WEC. If you have received this e-mail in error, please immediately notify our office at (720)-685-9951 or (303) 913-7341 and permanently delete any hard or digital copies. Thank you in advance for your responsiveness.

From: chadwin.cox@westerneci.com <chadwin.cox@westerneci.com>
Sent: Friday, August 30, 2019 12:22 PM
To: 'Kent Bruxvoort' <kent.bruxvoort@pec1.com>; 'Todd Hodges' <toddhodgesdesign@qwestoffice.net>
Cc: 'Debra Chumley' <tokmanager@rtebb.net>; 'Rick Robertson' <pri.rickrobertson@gmail.com>
Subject: FW: Market Street Business Park - draft traffic study

Afternoon Folks,

Please see the attached Preliminary Traffic Study (in the attached email). Below is my coordination with LSC regarding timing for a turn lane. They will include that clarification in the final version they expect to release next week.

I believe the attached Preliminary version achieves the goal for summarizing the impacts onto Market Street and scheduling of the hearings is in order.

I'll forward the final version after LSC does another comb through of it next week once they send it to us.

Please call with questions.

Thank you,

Chad

Chadwin F. Cox, PE

WESTERN ENGINEERING CONSULTANTS inc LLC

127 South Denver Avenue – Ft. Lupton, CO 80621

2501 Mill St - Brush, CO 80723

Ft. Lupton Office 720-685-9951

Brush Cell 303-913-7341

Fax 720-294-1330

email: chadwin.cox@westerneci.com

CONFIDENTIALITY, INDEMNITY, & DIGITAL/ELECTRONIC USE NOTICE: This electronic message transmission, and any attachments, is intended only for use by the recipient and may contain legally privileged and/or confidential information. If you are not the intended recipient of this e-mail, you are hereby notified that any dissemination, distribution or copying of this e-mail, and any attachments thereto, is strictly prohibited. The use of drawings, reports, and data in any electronic form furnished by Western Engineering consultants inc Llc (WEC) are instruments of service by WEC who shall be deemed author and retain all common and/or statuatory law and other rights including copyright. The recipient of this email agrees not to resuse any digitial/electronic files in whole or part for any purpose other than for the Project it was created. Further the recipient acknowledges differences may exist between the hard copy stamped and sealed plans compared to the digital/electronic information provided. Under al circumstances the hard-copy sealed and signed construction documents shall govern. Lastly the recipient agrees to the full extent permitted by law to indemnify and hold harmless WEC, its officers, directors, employees and subconsultants against all damages, liabilities or costs, including reasonable attorneys' fees and defense costs arising from any changes made by anyone other than WEC or from any reuse of the digital/electronic files withouth prior written consent of WEC. If you have received this e-mail in error, please immediately notify our office at (720)-685-9951 or (303) 913-7341 and permanently delete any hard or digital copies. Thank you in advance for your responsiveness.

From: Chris McGranahan <csmcgranahan@lsctrans.com>
Sent: Friday, August 30, 2019 12:17 PM
To: chadwin.cox@westerneci.com; ben.mickey@westerneci.com
Cc: Kevin Kraus <kmkraus@lsctrans.com>; Waltraud Carter <lsc@lscdenver.com>
Subject: RE: Market Street Business Park - draft traffic study

Chadwin,

There isn't likely a Town threshold. CDOT would say once the peak hour left-turn volume exceeds 25 passenger car equivalent vehicles in any one hour. Considering the low volume of opposing traffic I think we could say the trigger could be 50 vehicles. The issue with saying we don't need a lane because of lower opposing volume is we end up not building the lane and then the Town or County approves significant land use further north that drives the opposing volume much higher. If we set the trigger at 50vph then the turn lane would not likely be needed for the first phase – certainly not for just the hotel. We can add a statement to this affect in the final traffic study.

Thank you,

Christopher S. McGranahan, PE, PTOE

Principal

LSC Transportation Consultants, Inc.

1889 York Street

Denver, CO 80206

303-333-1105

csmcgranahan@lsctrans.com

lsctrans.com

From: chadwin.cox@westerneci.com <chadwin.cox@westerneci.com>
Sent: Friday, August 30, 2019 11:53 AM
To: 'Chris McGranahan' <csmcgranahan@lsctrans.com>; ben.mickey@westerneci.com
Cc: 'Kevin Kraus' <kmkraus@lsctrans.com>; 'Waltraud Carter' <lsc@lscdenver.com>
Subject: RE: Market Street Business Park - draft traffic study

Thank you for fitting it in today Chris – one quick question:

When do you believe that left turn lane is warranted – the 2040 buildout? Or when the hotel, gas station, retail, and fast foods are done?

Chadwin F. Cox, PE

WESTERN ENGINEERING CONSULTANTS inc LLC

127 South Denver Avenue – Ft. Lupton, CO 80621

2501 Mill St - Brush, CO 80723

Ft. Lupton Office 720-685-9951

Brush Cell 303-913-7341

Fax 720-294-1330

email: chadwin.cox@westerneci.com

CONFIDENTIALITY, INDEMNITY, & DIGITAL/ELECTRONIC USE NOTICE: This electronic message transmission, and any attachments, is intended only for use by the recipient and may contain legally privileged and/or confidential information. If you are not the intended recipient of this e-mail, you are hereby notified that any dissemination, distribution or copying of this e-mail, and any attachments thereto, is strictly prohibited. The use of drawings, reports, and data in any electronic form furnished by Western Engineering consultants inc Llc (WEC) are instruments of service by WEC who shall be deemed author and retain all common and/or statuatory law and other rights including copyright. The recipient of this email agrees not to resuse any digitial/electronic files in whole or part for any purpose other than for the Project it was created. Further the recipient acknowledges differences may exist between the hard copy stamped and sealed plans compared to the digital/electronic information provided. Under al circumstances the hard-copy sealed and signed construction documents shall govern. Lastly the recipient agrees to the full extent permitted by law to indemnify and hold harmless WEC, its officers, directors, employees and subconsultants against all damages, liabilities or costs, including reasonable attorneys' fees and defense costs arising from any changes made by anyone other than WEC or from any reuse of the digital/electronic files withouth prior written consent of WEC. If you have received this e-mail in error, please immediately notify our office at (720)-685-9951 or (303) 913-7341 and permanently delete any hard or digital copies. Thank you in advance for your responsiveness.

From: Chris McGranahan <csmcgranahan@lsctrans.com>
Sent: Friday, August 30, 2019 11:49 AM
To: ben.mickey@westerneci.com
Cc: chadwin.cox@westerneci.com; Kevin Kraus <kmkraus@lsctrans.com>; Waltraud Carter <lsc@lscdenver.com>
Subject: Market Street Business Park - draft traffic study

Ben,

Please find attached the draft traffic study for Market Street Business Park in Keenesburg. We are recommending a short NB LT storage lane approach the site access due to the relatively high peak hour turning volume. Let us know if you have any suggested edits and we will update as appropriate and finalize for submittal.

Thank you,

Christopher S. McGranahan, PE, PTOE

Principal

LSC Transportation Consultants, Inc.

1889 York Street

Denver, CO 80206

303-333-1105

csmcgranahan@lsctrans.com

lsctrans.com